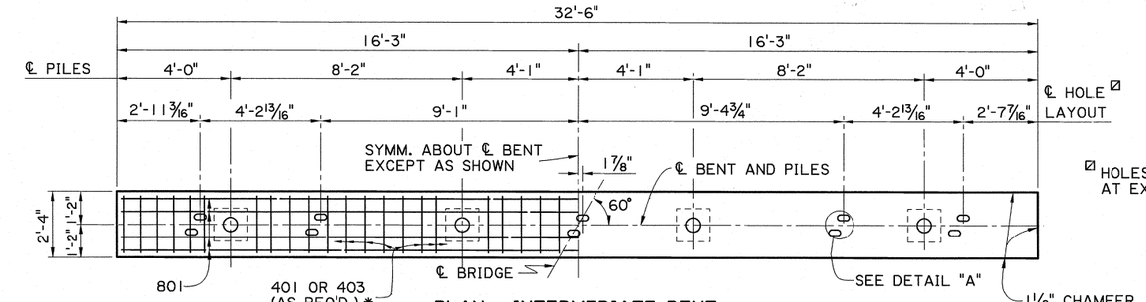

PLAN - INTERMEDIATE BENT
SCALE 3/8" = 1'-0"

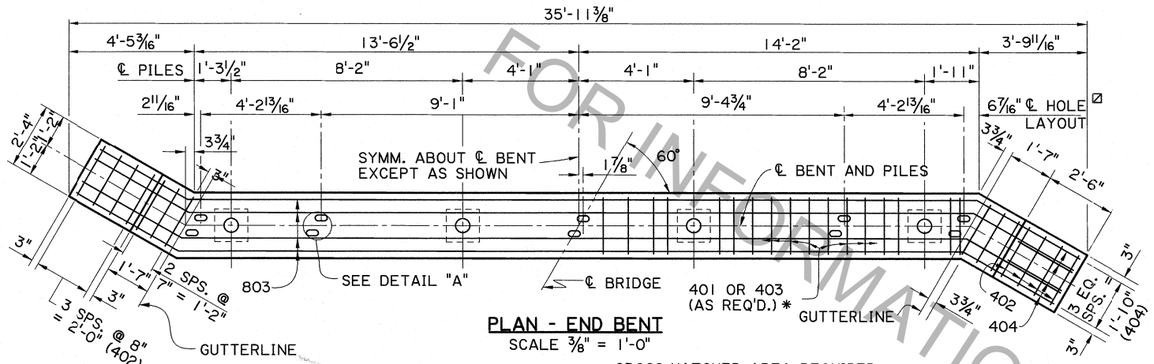

PLAN - END BENT
SCALE 3/8" = 1'-0"

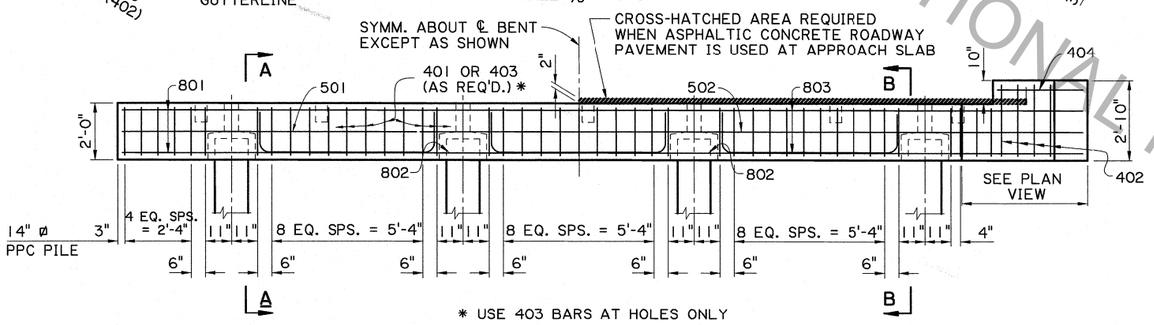

* USE 403 BARS AT HOLES ONLY

HALF ELEVATION - INTERMEDIATE BENT
SCALE 3/8" = 1'-0"

HALF ELEVATION - END BENT
SCALE 3/8" = 1'-0"

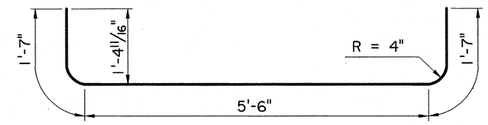

802
6" ø PIN

⊠ HOLES ARE OPTIONAL AT EXPANSION ENDS.

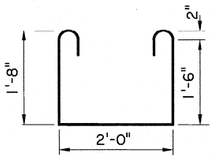

403
2" ø PIN

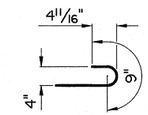

180° HOOK FOR 403 BARS
3" ø PIN

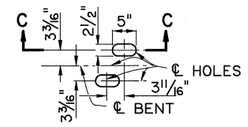

DETAIL A
SCALE 3/4" = 1'-0"

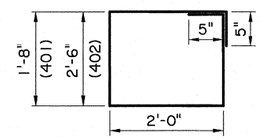

401 & 402
2" ø PIN

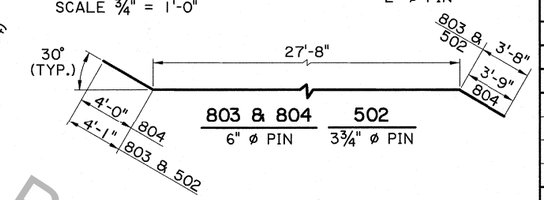

803 & 804
6" ø PIN

502
3 3/4" ø PIN

AS-DESIGNED RATING

VEHICLE	RATING FACTOR	NOTES
HL-93 (INV)	3.087	——
HL-93 (OPR)	4.002	——
LADV-11 (INV)	2.375	MAGNIFICATION FACTOR = 1.3

ESTIMATED QUANTITIES (ONE INTER. BENT)

BAR	NO.	UNIT LENGTH	TOTAL LENGTH	LOCATION
1001	4	2'-4"	9'-4"	DOWELS IN PILES
TOTAL NO. 10 BARS = 9'-4" = 40 LBS.				
801	6	32'-2"	193'-0"	LONGIT. IN CAP
802	6	8'-8"	52'-0"	LONGIT. IN CAP BTW. PILES
TOTAL NO. 8 BARS = 245'-0" = 654 LBS.				
501	2	32'-2"	64'-4"	LONGIT. IN CAP
TOTAL NO. 5 BARS = 64'-4" = 67 LBS.				
401	36	8'-2"	294'-0"	STIRRUPS IN CAP
403	9	6'-6"	58'-6"	STIRRUPS IN CAP
TOTAL NO. 4 BARS = 352'-6" = 235 LBS.				
TOTAL DEFORMED REINFORCING STEEL = 996 LBS.				
TOTAL CLASS P CONCRETE = 5.17 CU. YDS.				
MAX. PILE LOAD: SERVICE DEAD LOAD = 19 TONS SERVICE LIVE LOAD = 36 TONS FACTORED TOTAL LOAD = 76 TONS				
TOTAL GROUT FOR PILE RECESSES = 0.26 CU. YDS.				

ESTIMATED QUANTITIES (ONE END BENT)

BAR	NO.	UNIT LENGTH	TOTAL LENGTH	LOCATION
1001	4	2'-4"	9'-4"	DOWELS IN PILES
TOTAL NO. 10 BARS = 9'-4" = 40 LBS.				
802	6	8'-8"	52'-0"	LONGIT. IN CAP BTW. PILES
803	4	35'-5"	141'-8"	LONGIT. IN CAP
804	2	35'-5"	70'-10"	LONGIT. IN CAP
TOTAL NO. 8 BARS = 264'-6" = 706 LBS.				
502	2	35'-5"	70'-10"	LONGIT. IN CAP
TOTAL NO. 5 BARS = 70'-10" = 74 LBS.				
401	34	8'-2"	277'-8"	STIRRUPS IN CAP
402	8	9'-10"	78'-8"	STIRRUPS IN WINGWALL
403	4	6'-6"	58'-6"	STIRRUPS IN CAP
404	8	2'-2"	17'-4"	LONGIT. IN WINGWALL
TOTAL NO. 4 BARS = 432'-2" = 289 LBS.				
TOTAL DEFORMED REINFORCING STEEL= 1,109 LBS.				
⊗ TOTAL CLASS P CONCRETE = 6.12 CU. YDS.				
MAX. PILE LOAD: SERVICE DEAD LOAD = 19 TONS SERVICE LIVE LOAD = 36 TONS FACTORED TOTAL LOAD = 76 TONS				
TOTAL GROUT FOR PILE RECESSES = 0.26 CU. YDS.				

⊗ ADD 0.22 CU. YDS. OF CLASS P CONCRETE PER BENT WHEN ASPHALTIC CONCRETE ROADWAY PAVEMENT IS USED AT APPROACH SLAB.

ALTERNATE BENT NOTES:

CONSTRUCTION SPECIFICATIONS: LATEST APPROVED LOUISIANA STANDARD SPECIFICATIONS FOR ROADS AND BRIDGES, SUPPLEMENTAL SPECIFICATIONS AND SPECIAL PROVISIONS.
DESIGN SPECIFICATIONS: AASHTO LRFD BRIDGE DESIGN SPECIFICATIONS, 4th EDITION, WITH 2008 & 2009 INTERIMS.
DESIGN LOAD: LIVE LOAD IS HL-93, AND LADV-11 (LOUISIANA DESIGN VEHICLE LIVE LOAD 2011).
STRUCTURAL CONCRETE: ALL CONCRETE SHALL BE CLASS P. STEEL SIDE FORMS AND STEEL OR CONCRETE BOTTOM FORMS SHALL BE USED FOR PRECAST COMPONENTS. EXPOSED EDGES SHALL HAVE A 3/4" CHAMFER UNLESS OTHERWISE NOTED. ALL SURFACES SHALL RECEIVE A CLASS I ORDINARY SURFACE FINISH UPON REMOVAL OF THE FORMS. ALL EXPOSED FACES OF WINGWALLS AND ENDS OF CAPS SHALL RECEIVE A CLASS 2A SPECIAL SURFACE FINISH.
REINFORCING STEEL: ALL REINFORCING SHALL BE GRADE 60. DIMENSIONS RELATING TO FABRICATION ARE OUT TO OUT OF BARS, UNLESS OTHERWISE NOTED. DIMENSIONS RELATING TO SPACING ARE TO BAR CENTERS, UNLESS OTHERWISE NOTED.
GROUT: THE GROUT SHALL BE AN APPROVED FLOWABLE NON-SHRINK GROUT LISTED ON QPL 47. THE GROUT SHALL BE TESTED FOR ACCEPTANCE PRIOR TO USAGE. SURFACES SHALL BE THOROUGHLY SATURATED WITH WATER BY FLOODING THE VOID FOR APPROXIMATELY 5 MINUTES IMMEDIATELY BEFORE THE GROUT IS PLACED. ONLY POTABLE WATER SHALL BE USED FOR SATURATION AND MIXING PURPOSES.
PRECAST UNITS: THE PLANS FOR AN ONGOING OPERATION OF FABRICATING FACILITIES SHALL BE APPROVED BY THE DEPARTMENT. EACH UNIT SHALL HAVE THE FABRICATOR'S MARK AND UNIQUE NUMBER, MEETING THE APPROVAL OF THE ENGINEER, STAMPED OR SCRIBED IN THE PLASTIC CONCRETE. ALL UNITS SHALL BE HELD AT THE PLANT FOR A MINIMUM OF 10 DAYS AFTER CASTING. THE CONCRETE SHALL REACH A MINIMUM STRENGTH OF 3,000 PSI BEFORE HANDLING IS PERMITTED. THE LIFTING INSERTS SHALL BE 1" TYPE S INSERTS AS MANUFACTURED BY DAYTON-SUPERIOR CORPORATION OR AN APPROVED EQUAL. EACH INSERT SHALL HAVE A MINIMUM LOAD CAPACITY OF 10,000 POUNDS. FOUR INSERTS WITH 1" ø x 5" LONG COIL BOLTS SHALL BE PLACED IN THE TOP OF THE UNITS AND LOCATED AT A DISTANCE 21% OF ITS LENGTH (+/- 6") FROM EACH END AND 6" FROM THE EDGES. INSERT HOLES SHALL BE GROUT FILLED AFTER PLACEMENT OF THE UNIT. AT THE CONTRACTOR'S OPTION, A SLING OF SUFFICIENT CAPACITY MAY BE USED FOR LIFTING, PROVIDED THE SAME PICKUP LOCATIONS FROM THE ENDS ARE USED.
PRECAST CONCRETE PILES: PILES SHALL BE FABRICATED ACCORDING TO STANDARD DETAIL C.S. 216. THE CENTROID OF THE PILE AT CUTOFF ELEVATION SHALL NOT VARY FROM THE PLAN LOCATION BY MORE THAN 3" MEASURED EITHER PERPENDICULAR OR PARALLEL TO THE CENTERLINE OF BENT. IF THE CENTROID OF A PILE IS OUTSIDE THESE LIMITS BUT WITHIN THE ACCURACY OF DRIVING REQUIRED BY THE SPECIFICATIONS, A BENT CAP SHALL BE PROVIDED ACCORDING TO THE CAST-IN-PLACE ALTERNATE. EXTERIOR PILES ARE TO BE BATTERED OUTWARD A 1 1/2 ON 12 IN THE LONGITUDINAL DIRECTION OF THE BENT, WHEN NOTED ON THE GENERAL PLAN.
BASIS OF PAYMENT: ALL MATERIALS SHALL BE PAID FOR UNDER "BRIDGE SUPERSTRUCTURE AND SUBSTRUCTURE" ACCORDING TO THE SPECIFICATIONS.

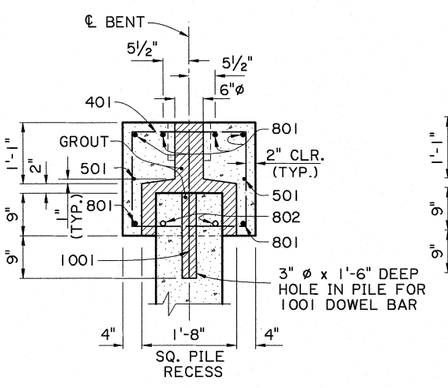

SECTION A-A
SCALE: 3/4" = 1'-0"

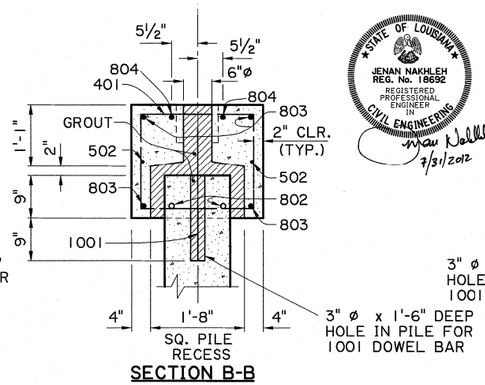

SECTION B-B
SCALE: 3/4" = 1'-0"
(WHEN PORTLAND CEMENT CONCRETE ROADWAY PAVEMENT IS USED AT APPROACH SLAB)

STATE OF LOUISIANA
JENAN NAKHLEH
REG. No. 18692
REGISTERED PROFESSIONAL ENGINEER IN CIVIL ENGINEERING
7/31/2012

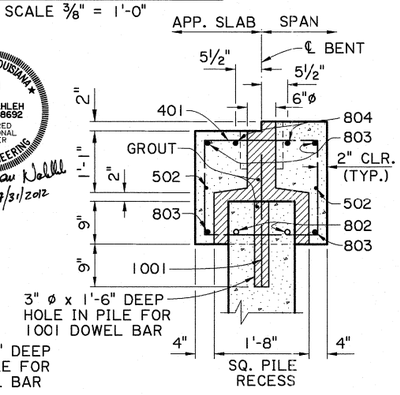

SECTION B-B
SCALE: 3/4" = 1'-0"
(WHEN ASPHALTIC CONCRETE ROADWAY PAVEMENT IS USED AT APPROACH SLAB)

FOR INFORMATIONAL PURPOSES ONLY

SHEET NUMBER	PARISH	CONTROL SECTION	STATE PROJECT

DESIGNED	B. DELATTE	DETAILED	D. HYMEL	SERIES NUMBER
CHECKED	J. NAKHLEH	CHECKED	J. NAKHLEH	11/15/2010 5 OF 11

NO.	DATE	REVISION OR CHANGE ORDER DESCRIPTION	BY

STATE OF LOUISIANA DEPARTMENT OF TRANSPORTATION AND DEVELOPMENT

ALTERNATE BENTS
PRECAST CONCRETE BENT
24'-0" CLEAR ROADWAY
60° CROSSING TWO WAY TANGENT

STANDARD DETAIL PSS-60-24-20SL

8/8/2012 10:2

IP_PWP:dms55679\SS6024altbent2.dgn