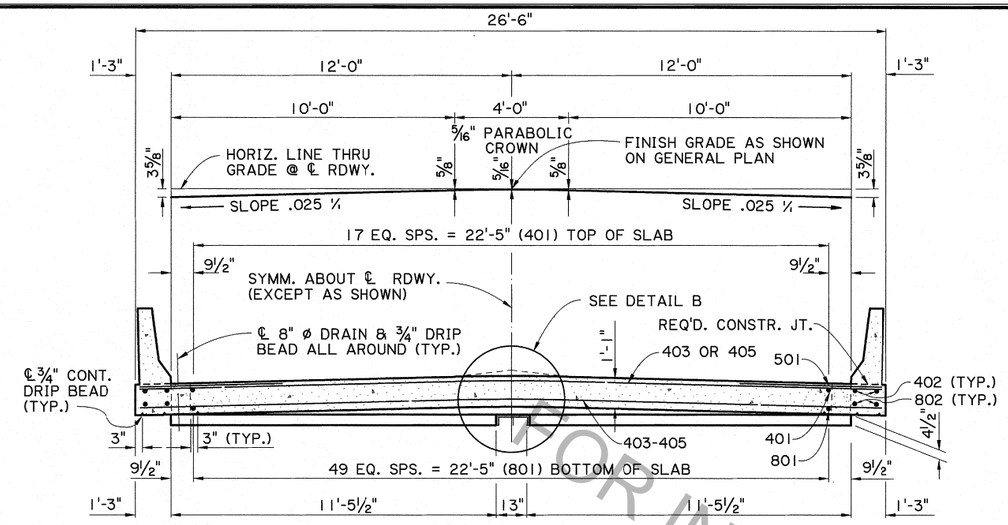

SECTION A-A
SCALE : 3/8" = 1'-0"

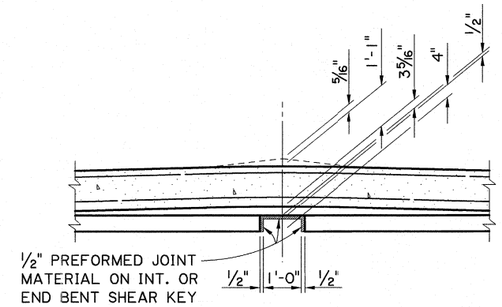

DETAIL B
SCALE : 1/2" = 1'-0"

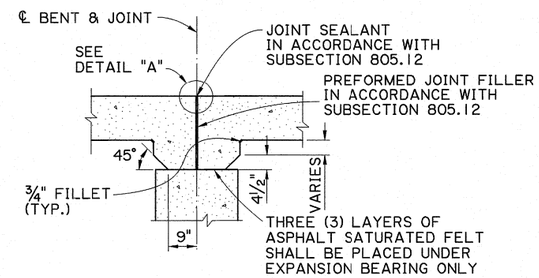

DETAIL SHOWING TYPICAL JOINT & HAUNCH
SCALE : 1/2" = 1'-0"

ESTIMATED QUANTITIES (ONE SPAN)				
BAR	NO.	UNIT LENGTH	TOTAL LENGTH	LOCATION
801	50	19'-6"	975'-0"	LONGIT. BOT. OF SLAB
802	4	19'-7"	78'-4"	LONGIT. BOT. OF SLAB
TOTAL NO. 8 BARS = 1053'-4" = 2812 LBS.				
501	56	5'-0"	280'-0"	TRANS. TOP OF SLAB
TOTAL NO. 5 BARS = 280'-0" = 292 LBS.				
401	18	19'-6"	351'-0"	LONGIT. TOP OF SLAB
402	4	19'-7"	78'-4"	LONGIT. TOP OF SLAB
403	4	29'-1"	116'-4"	TRANS. TOP & BOT. OF SLAB
404	2	30'-1"	60'-2"	TRANS. BOT. OF SLAB
405	50	30'-2"	1508'-4"	TRANS. TOP & BOT. OF SLAB
TOTAL NO. 4 BARS = 2114'-2" = 1412 LBS.				
TOTAL DEFORMED REINFORCING STEEL = 4516 LBS.				
CLASS AA CONCRETE = 22.21 CU. YDS.				
CONCRETE RAILING (BARRIER TYPE) = 40.00 LIN. FT.				

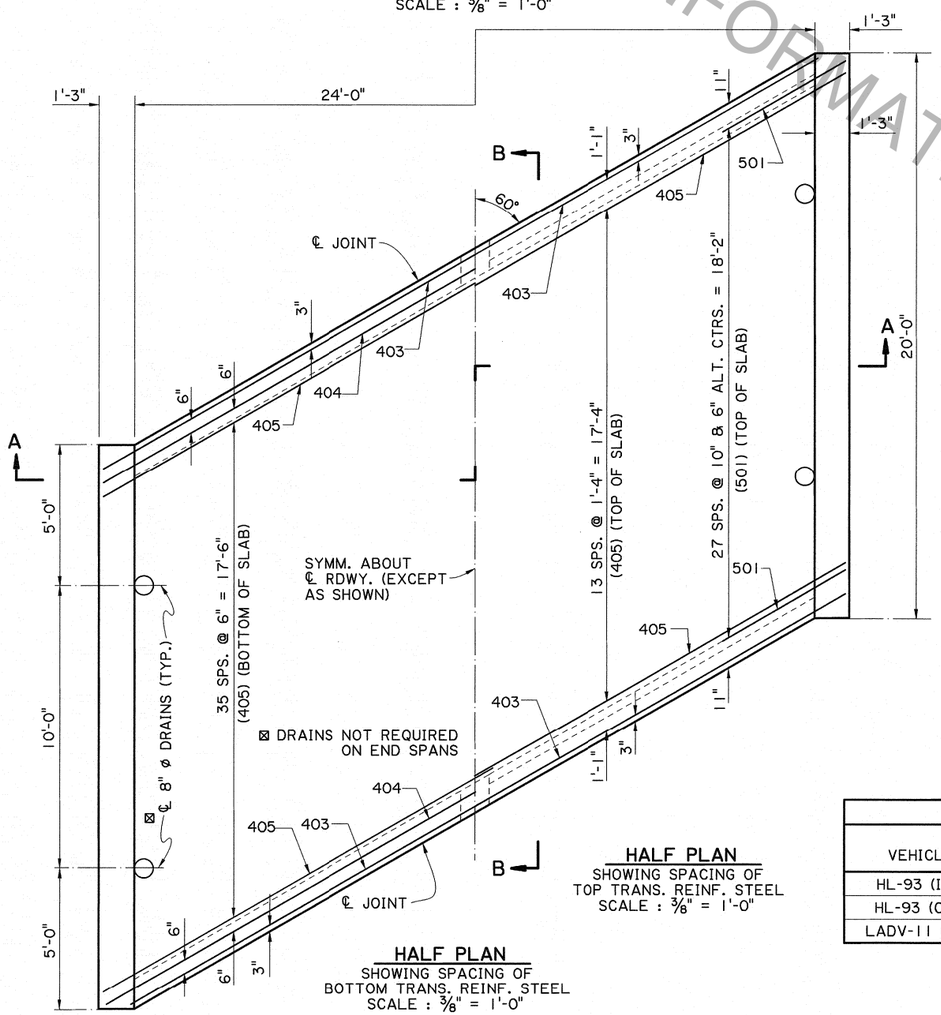

HALF PLAN
SHOWING SPACING OF BOTTOM TRANS. REINF. STEEL
SCALE : 3/8" = 1'-0"

HALF PLAN
SHOWING SPACING OF TOP TRANS. REINF. STEEL
SCALE : 3/8" = 1'-0"

* MEASURED PARALLEL TO ℄ ROADWAY.

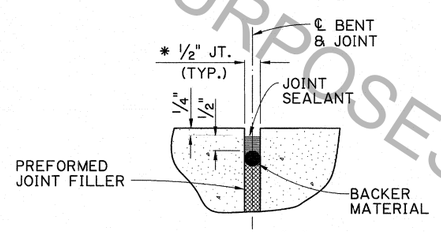

DETAIL "A"
N.T.S.

STATE OF LOUISIANA
JENAN NAKHLEH
REG. No. 18692
REGISTERED PROFESSIONAL ENGINEER IN CIVIL ENGINEERING
7/31/2012

AS-DESIGNED RATING		
VEHICLE	RATING FACTOR	NOTES
HL-93 (INV)	1.427	——
HL-93 (OPR)	1.850	——
LADV-11 (INV)	1.098	MAGNIFICATION FACTOR = 1.3

SPAN NOTES:

CONSTRUCTION SPECIFICATIONS:
LATEST APPROVED LOUISIANA STANDARD SPECIFICATIONS FOR ROADS AND BRIDGES, SUPPLEMENTAL SPECIFICATIONS AND SPECIAL PROVISIONS.

DESIGN SPECIFICATIONS:
AASHTO LRFD BRIDGE DESIGN SPECIFICATIONS, 4th EDITION, AND 2008 & 2009 INTERIMS.

DESIGN LOADS:
THE BRIDGE DECK IS DESIGNED FOR A FUTURE WEARING COURSE OF 19 PSF. THE LIVE LOAD IS HL-93, AND LADV-11 (LOUISIANA DESIGN VEHICLE LIVE LOAD 2011).

STRUCTURAL CONCRETE:
ALL CONCRETE SHALL BE CLASS AA. EXPOSED EDGES SHALL HAVE A 3/4" CHAMFER UNLESS OTHERWISE NOTED. ALL BARRIER RAIL SURFACES ARE TO RECEIVE A CLASS 2A SPECIAL SURFACE FINISH.

REINFORCING STEEL:
ALL REINFORCING SHALL BE GRADE 60; DIMENSIONS RELATING TO SPACING ARE TO BAR CENTERS, DIMENSIONS RELATING TO FABRICATION ARE OUT TO OUT OF BARS, UNLESS OTHERWISE NOTED. ALL REINFORCING BARS SHALL BE PLACED TO PROVIDE A MINIMUM COVER OF ONE INCH FROM THE SURFACE OF THE DRAIN HOLES TO THE FACE OF THE BARS.

GUARD RAIL:
REFER TO THE GENERAL PLAN FOR GUARD RAIL REQUIREMENTS. PROVIDE HOLES FOR GUARD RAIL CONNECTIONS ACCORDING TO STANDARD PLAN GR 200 ON ALL FOUR BRIDGE RAIL ENDS.

BASIS OF PAYMENT:
ALL MATERIAL SHALL BE PAID FOR UNDER "BRIDGE SUPERSTRUCTURE AND SUBSTRUCTURE" ACCORDING TO THE SPECIFICATIONS.

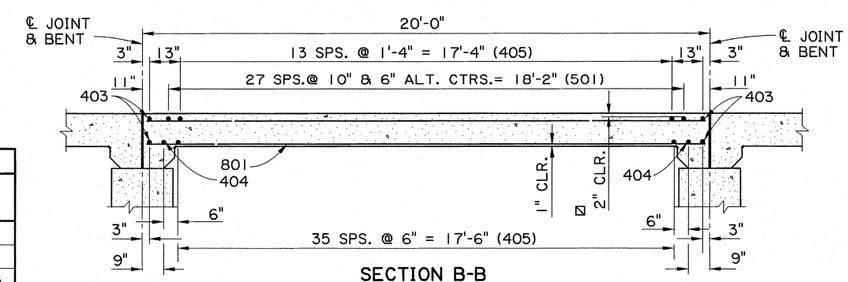

SECTION B-B
SCALE 3/8" = 1'-0"

⊠ FOR BRIDGES IN DISTRICTS 04 & 05, MIN. CONCRETE COVER IN TOP OF SLAB SHALL BE 2 1/2".

FOR INFORMATIONAL PURPOSES ONLY

SHEET NUMBER

PARISH | CONTROL SECTION | STATE PROJECT

DESIGNED J. PAINE
CHECKED J. NAKHLEH
DETAILED D. HYMEL
CHECKED J. NAKHLEH
SERIES NUMBER 11/15/2010
2 OF 11

NO. | DATE | REVISION OR CHANGE ORDER DESCRIPTION | BY

STATE OF LOUISIANA DEPARTMENT OF TRANSPORTATION AND DEVELOPMENT

SPAN (1 OF 2)
20'-0" CONCRETE SLAB SPAN
24'-0" CLEAR ROADWAY
60° CROSSING TWO WAY TANGENT

STANDARD DETAIL PSS-60-24-20SL

8/9/2012 09:3
IP_PWP:dms55679\SS6024span1.dgn