1/4/2012 08:1
CHECK PRINTS
IP_PWP:dms55681\SS6030aprslab(LRFD).dgn

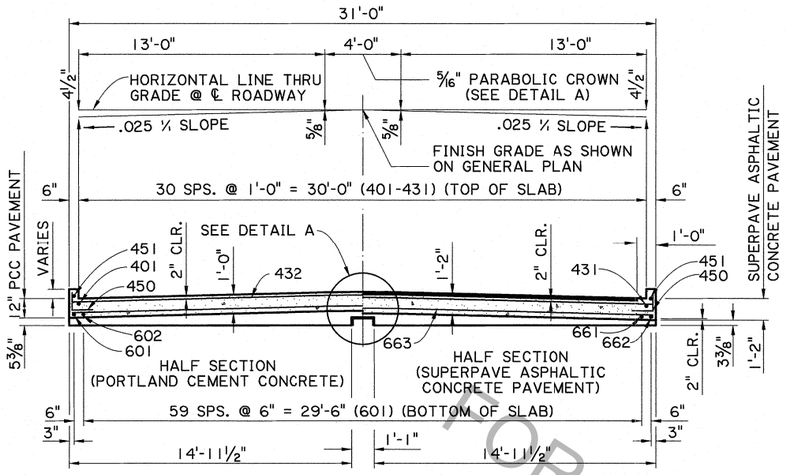

SECTION A-A
SCALE : ¼" = 1'-0"

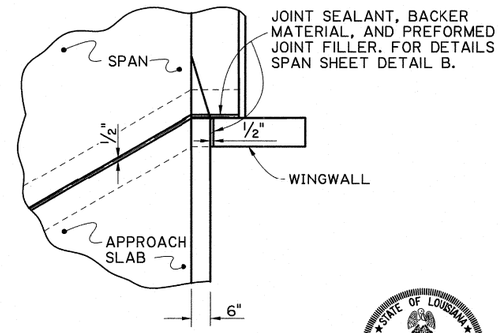

JOINT DETAIL
SCALE : ½" = 1'-0"

STATE OF LOUISIANA
JENAN NAKHLEH
REG. No. 18692
REGISTERED PROFESSIONAL ENGINEER IN CIVIL ENGINEERING
12/27/2011

ESTIMATED QUANTITIES (ONE SLAB)

	BAR	No.	SHORT BAR	VAR. (IN.)	LONG BAR	TOTAL LENGTH	LOCATION
	601	1			30'-11"	30'-11"	LONGITUDINAL BOTTOM OF SLAB
	602-661	1 EA.	31'-1"	3.4576	48'-1"	2375'-0"	LONGITUDINAL BOTTOM OF SLAB
	662	1			48'-3"	48'-3"	LONGITUDINAL BOTTOM OF SLAB
	663	62			30'-8"	1901'-4"	TRANSVERSE BOTTOM OF SLAB
	664-697	1 EA.	1'-6"	10.3939	30'-1"	536'-11"	TRANSVERSE BOTTOM OF SLAB
	TOTAL No. 6 BARS			=	4892'-5"	=	7348 LBS.
	401-416	1 EA.	30'-11"	6.9333	39'-7"	564'-0	LONGITUDINAL TOP OF SLAB
⊙	417-431	1 EA.	41'-10"	6.9286	49'-11"	688'-2"	LONGITUDINAL TOP OF SLAB
	432	31			30'-8"	950'-8"	TRANSVERSE TOP OF SLAB
	433-449	1 EA.	1'-11"	20.8125	29'-8"	268'-6"	TRANSVERSE TOP OF SLAB
	450	14			2'-0"	28'-0"	DOWELS IN CURB
	451	2			9'-7"	19'-2"	LONGITUDINAL IN CURB
	TOTAL No. 4 BARS			=	2509'-1"	=	1682 LBS.
✳	TOTAL DEFORMED REINFORCING STEEL					=	9030 LBS.
	CONCRETE APPROACH SLAB					=	137.78 SQ. YDS.
⊠	SUPERPAVE ASPHALTIC CONCRETE					=	13.8 TONS
⊠	SAW CUT AND SEAL					=	29 LIN. FT.

✳ TO BE PAID FOR UNDER ITEM CONCRETE APPROACH SLABS.
⊙ INCLUDES 1'-8" MINIMUM LAP SPLICE. ALL LAP SPLICES SHOULD BE STAGGERED
⊠ REQUIRED WHEN APPROACH SLAB IS ADJACENT TO SUPERPAVE ASPHALTIC CONCRETE PAVEMENT. PAID FOR UNDER ITEM SUPERPAVE ASPHALTIC CONCRETE, AND SAWING AND SEALING TRANSVERSE JOINTS IN ASPHALTIC CONCRETE OVERLAY.

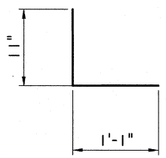

450
2"ø PIN

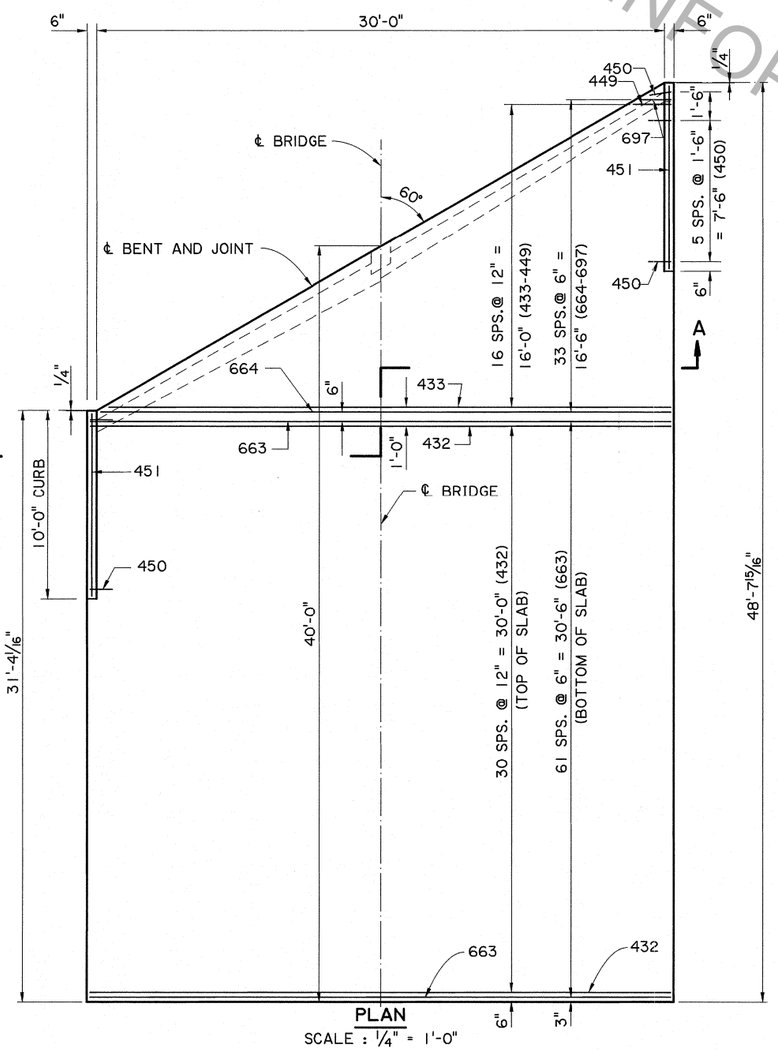

PLAN
SCALE : ¼" = 1'-0"

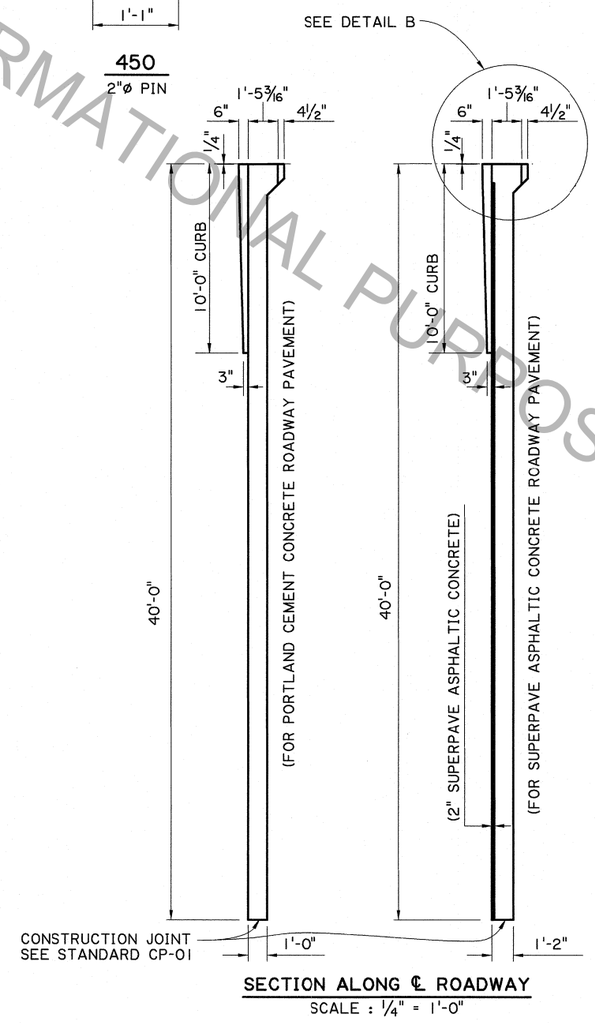

SECTION ALONG ℄ ROADWAY
SCALE : ¼" = 1'-0"

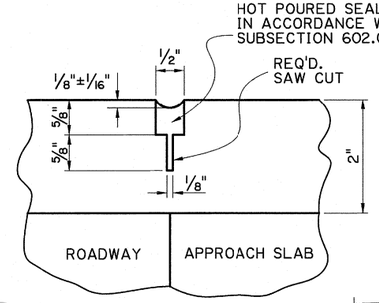

SAWING & SEALING JOINT DETAIL
N.T.S.

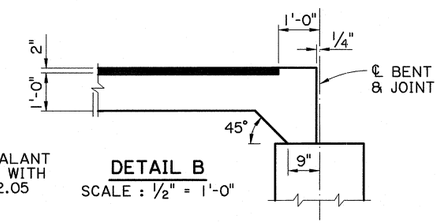

DETAIL B
SCALE : ½" = 1'-0"

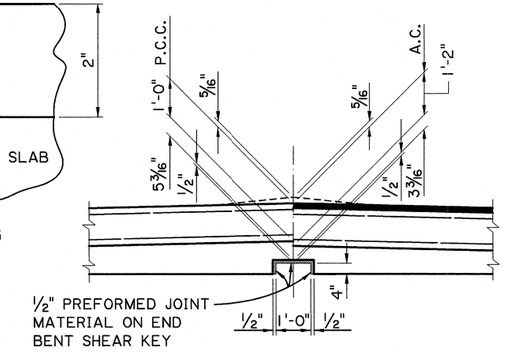

DETAIL A
SCALE : ½" = 1'-0"

APPROACH SLAB NOTES:

CONSTRUCTION SPECIFICATIONS: LATEST APPROVED LOUISIANA STANDARD SPECIFICATIONS FOR ROADS AND BRIDGES, SUPPLEMENTAL SPECIFICATIONS AND SPECIAL PROVISIONS.

DESIGN SPECIFICATIONS: AASHTO LRFD BRIDGE DESIGN SPECIFICATIONS 4th EDITION, WITH 2008 & 2009 INTERIMS.

STRUCTURAL CONCRETE: ALL CONCRETE SHALL BE CLASS AA. EXPOSED EDGES SHALL HAVE A ¾" CHAMFER, UNLESS OTHERWISE NOTED.

SUPERPAVE ASPHALTIC CONCRETE: TO BE THE SAME TYPE AS THE SUPERPAVE ASPHALTIC CONCRETE USED FOR THE APPROACH ROADWAY PAVEMENT OR OVERLAY.

REINFORCING STEEL: ALL REINFORCING STEEL SHALL BE GRADE 60. DIMENSIONS RELATING TO THE FABRICATION ARE OUT-TO-OUT OF BARS, UNLESS OTHERWISE NOTED. DIMENSIONS RELATING TO SPACING ARE TO BAR CENTERS.

BEDDING MATERIAL: FOR DETAILS OF BEDDING MATERIAL AND UNDERDRAINS. SEE STANDARD DETAIL ASD-SS.

SAWING & SEALING: THE SUPERPAVE ASPHALTIC CONCRETE SHALL BE SAW CUT AT THE END OF THE CONCRETE APPROACH SLAB THE ENTIRE ROADWAY WIDTH AND SEALED.

BASIS OF PAYMENT: ALL MATERIAL SHALL BE PAID FOR UNDER 'CONCRETE APPROACH SLABS' ACCORDING TO THE SPECIFICATIONS, EXCEPT WHERE NOTED ON THIS SHEET.

FOR INFORMATIONAL PURPOSES ONLY

SHEET NUMBER
PARISH | FEDERAL PROJECT | STATE PROJECT
DESIGNED J. NAKHLEH | CHECKED J. PAINE | DETAILED D. HYMEL | CHECKED J. NAKHLEH | DATE 10/10/2011 | SHEET
NO. | DATE | REVISION DESCRIPTION | BY

APPROACH SLAB
40'-0" CONCRETE APPROACH SLAB
30'-0" CLEAR ROADWAY
60° CROSSING TWO WAY TANGENT
STANDARD DETAIL CASBR-60-30TWT-40L-20SL

BRIDGE AND STRUCTURAL DESIGN