1/4/2012 08:2
CHECK PRINTS
IP_PWP:dms55681\SS6030span1(LRFD).dgn

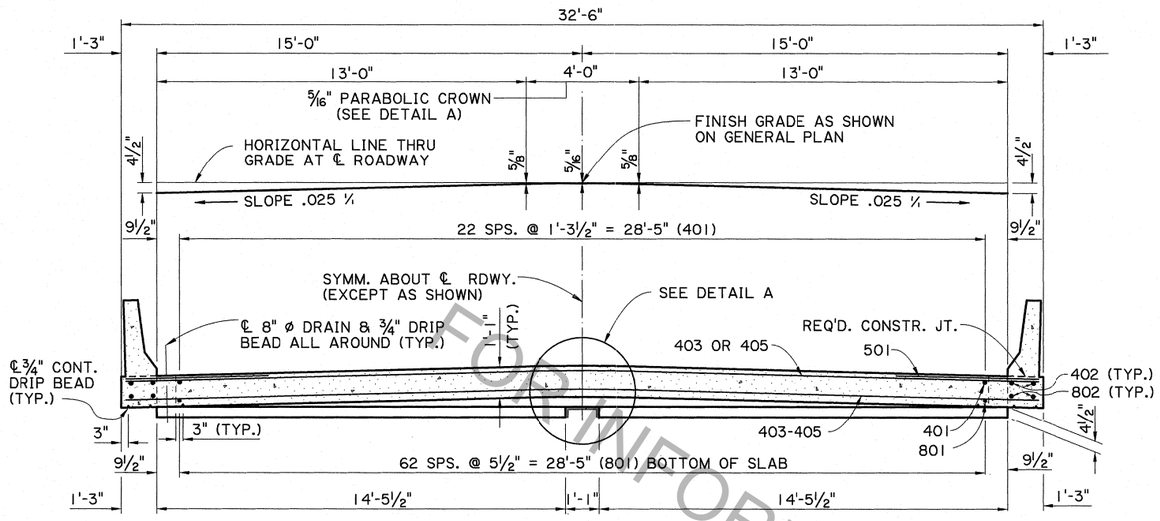

SECTION A-A

ESTIMATED QUANTITIES (ONE SPAN)				
BAR	NO.	UNIT LENGTH	TOTAL LENGTH	LOCATION
801	63	19'-6"	1228'-6"	LONGIT. BOT. OF SLAB
802	4	19'-7"	78'-4"	LONGIT. BOT. OF SLAB
TOTAL NO. 8 BARS = 1306'-10 = 3489 LBS.				
501	56	5'-0"	280'-0"	TRANS. TOP OF SLAB
TOTAL NO. 5 BARS = 280'-0" = 292 LBS.				
401	23	19'-6"	448'-6"	LONGIT. TOP OF SLAB
402	4	19'-7"	78'-4"	LONGIT. TOP OF SLAB
403	4	36'-0"	144'-0"	TRANS. TOP & BOT. OF SLAB
404	2	37'-0"	74'-0"	TRANS. BOT. OF SLAB
405	50	37'-1"	1854'-2"	TRANS. TOP & BOT. OF SLAB
TOTAL NO. 4 BARS = 2599'-0" = 1736 LBS.				
TOTAL DEFORMED REINFORCING STEEL = 5517 LBS.				
CLASS AA CONCRETE = 27.30 CU. YDS.				
CONCRETE RAILING (BARRIER TYPE) = 40.00 LIN. FT.				

AS-DESIGNED RATING		
VEHICLE	RATING FACTOR	NOTES
HL-93 (INV)	1.427	——
HL-93 (OPR)	1.850	——
LADV-11 (INV)	1.098	MAGNIFICATION FACTOR = 1.3

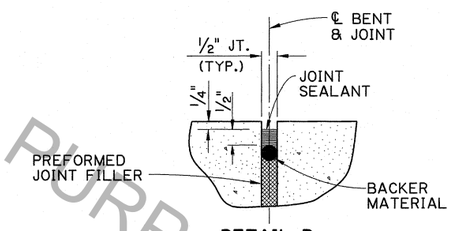

DETAIL B
N.T.S.

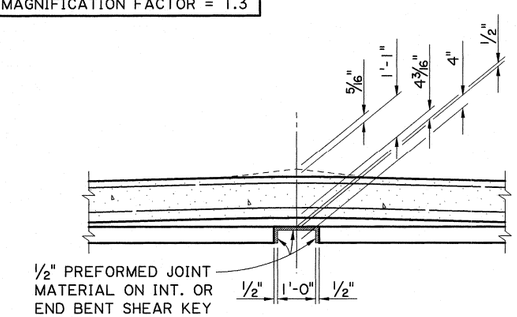

DETAIL A
SCALE : 1/2" = 1'-0"

⊠ FOR BRIDGES IN DISTRICTS 04 & 05, MINIMUM COVER IN TOP OF SLAB SHALL BE 2 1/2".

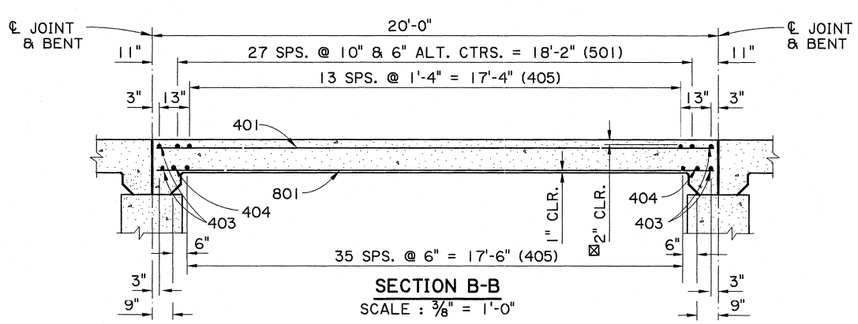

SECTION B-B
SCALE : 3/8" = 1'-0"

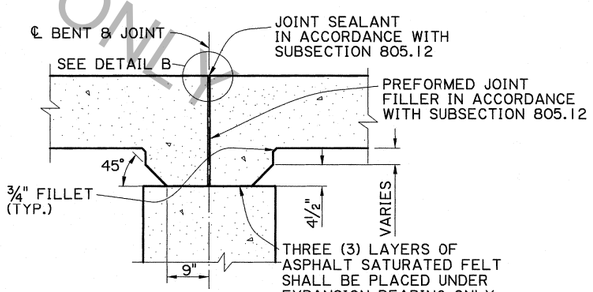

DETAIL SHOWING TYPICAL JOINT & HAUNCH
SCALE : 1/2" = 1'-0"

⊠ FOR INFORMATIONAL PURPOSES ONLY

SHEET NUMBER
PARISH | FEDERAL PROJECT | STATE PROJECT
DESIGNED J. NAKHLEH
CHECKED J. PAINE
DETAILED D. HYMEL
CHECKED J. NAKHLEH
DATE 10/10/2011
SHEET 1 OF 2
NO. | DATE | REVISION DESCRIPTION | BY

SPAN
20'-0" CONCRETE SLAB SPAN
30'-0" CLEAR ROADWAY
60° CROSSING TWO WAY TANGENT

STANDARD DETAIL CSSBR-60-30TWT-20SL

BRIDGE AND STRUCTURAL DESIGN