12/19/2011 09:5
CHECK PRINTS
IP_PWP:dms55684\SS6044bent1(LRFD).dgn

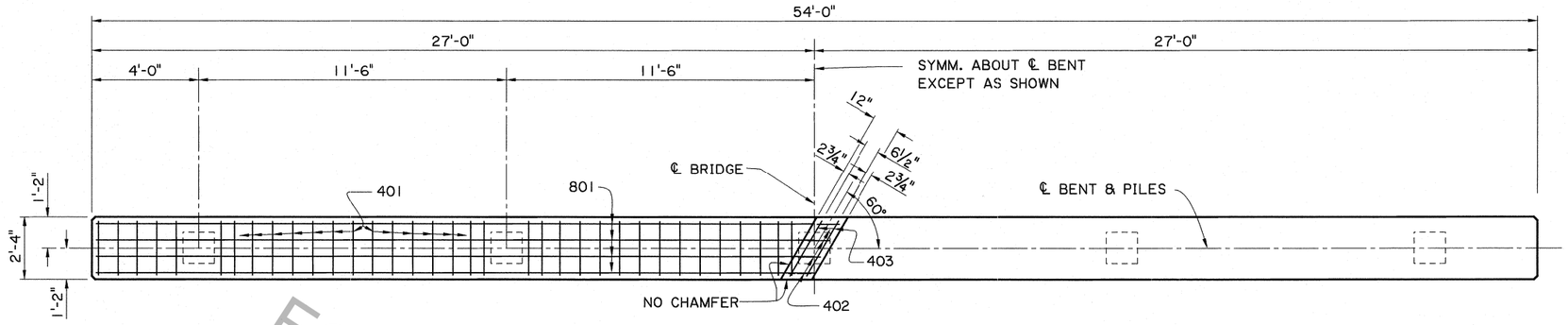

PLAN - INTERMEDIATE BENT

SCALE : ⅜" = 1'-0"

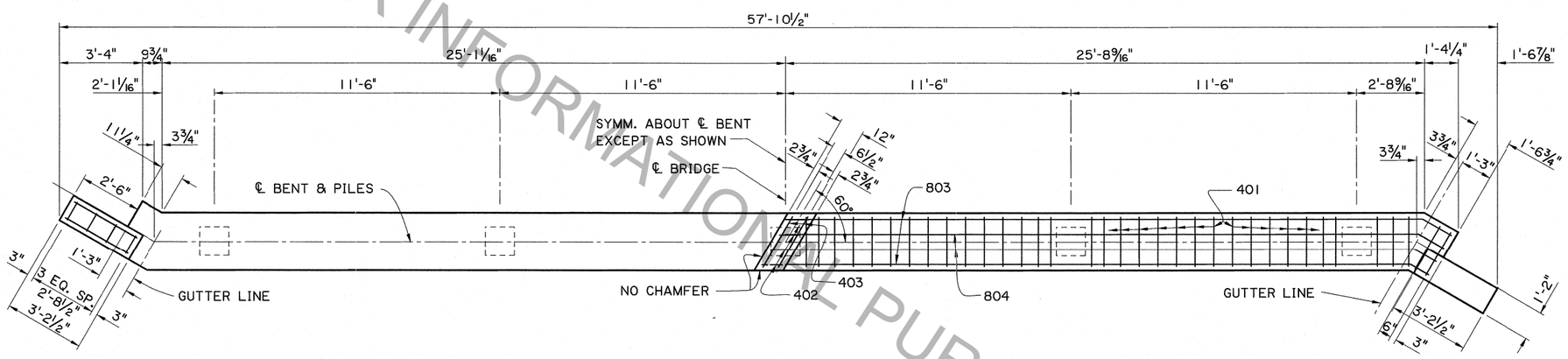

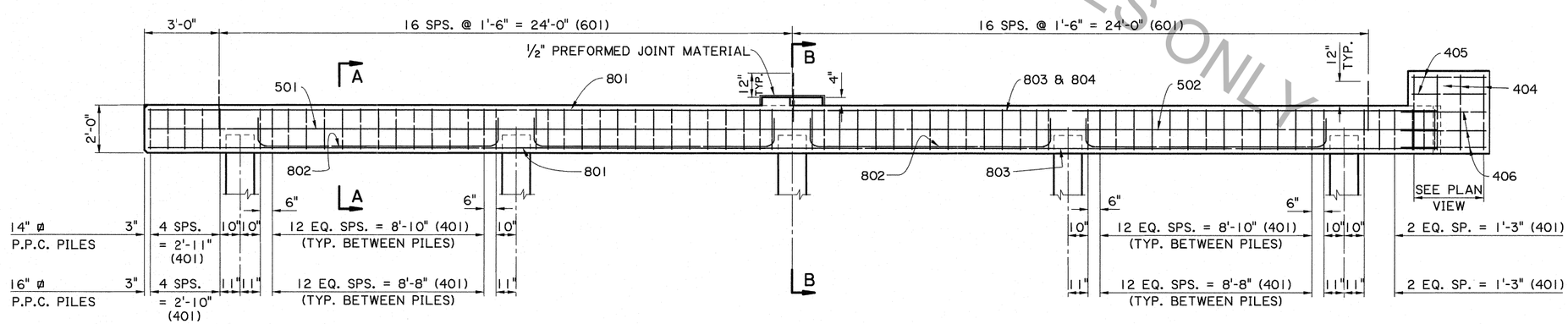

HALF ELEVATION - INTERMEDIATE BENT

SCALE : ⅜" = 1'-0"

HALF ELEVATION - END BENT

SCALE : ⅜" = 1'-0"

FOR INFORMATIONAL PURPOSES ONLY

STATE OF LOUISIANA
JENAN NAKHLEH
REG. No. 18692
REGISTERED PROFESSIONAL ENGINEER IN CIVIL ENGINEERING
12/13/2011

SHEET NUMBER			
PARISH	FEDERAL PROJECT	STATE PROJECT	
DESIGNED P.J. PAINE	DETAILED D. HYMEL	DATE 9/24/2010	
CHECKED J. NAKHLEH	CHECKED J. NAKHLEH	SHEET 1 OF 2	

NO.	DATE	REVISION DESCRIPTION	BY

STATE OF LOUISIANA DEPARTMENT OF TRANSPORTATION AND DEVELOPMENT

BENTS (1 OF 2)
REINFORCED CONCRETE PILE BENT
44'-0" CLEAR ROADWAY
60° CROSSING TWO WAY TANGENT

STANDARD DETAIL BCSSBR-60-44TWT-20SL

BRIDGE AND STRUCTURAL DESIGN