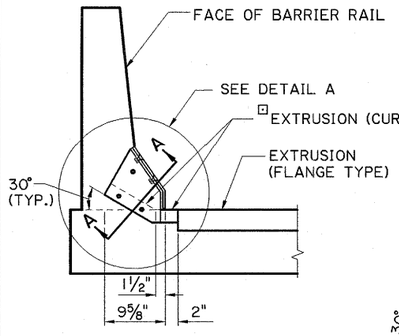

BARRIER SECTION ALT. 1
(LOW SIDE ONLY)

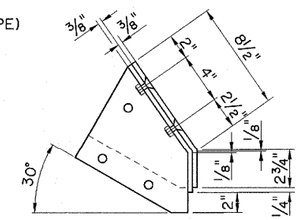

DETAIL A
(SEAL NOT SHOWN)

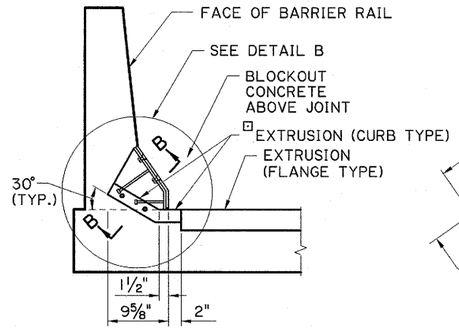

BARRIER SECTION ALT. 2
(LOW SIDE ONLY)

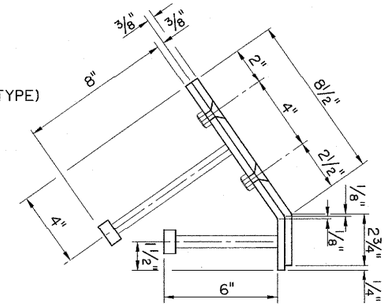

DETAIL B
(SEAL NOT SHOWN)

SPECIAL SEAL SECTION REQUIRED FOR 90° VERTICAL SKEW. ALL SPLICES TO BE HEAT VULCANIZED IN FACTORY.

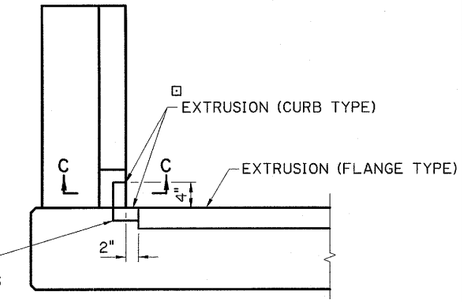

BARRIER SECTION
(QUAD BEAM SPANS @ END BENTS)
(LOW SIDE ONLY)

⊡ FLANGE TYPE EXTRUSION MAY BE USED IN LIEU OF CURB TYPE EXTRUSION IF SITE CONDITIONS PERMIT.

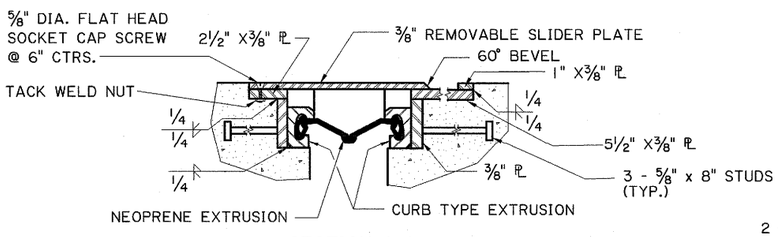

SECTION A-A

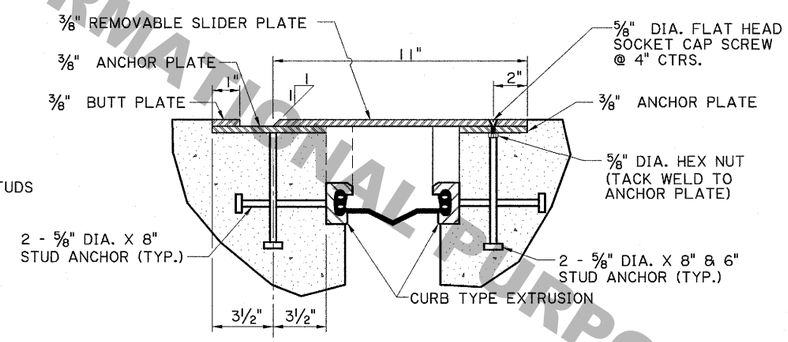

SECTION B-B

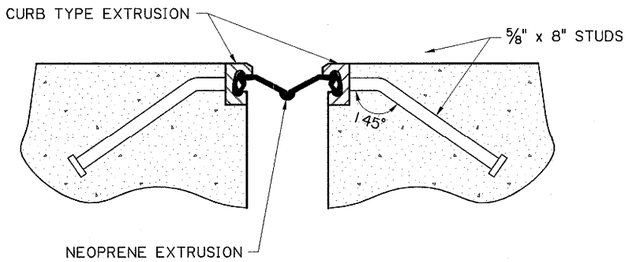

SECTION C-C

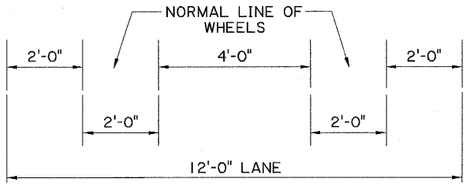

DIMENSIONS SHOWN ARE NORMAL TO ROADWAY WHEN JOINT IS PLACED ON SKEW THE DIMENSIONS SHOWN WILL VARY TO MEET THE SKEW DIMENSIONS ALONG THE ℄ OF THE JOINT.

SPLICE LOCATIONS

SPLICE LOCATIONS SHALL BE LOCATED SO AS NOT TO FALL IN THE "NORMAL LINE OF WHEELS" EXCEPT FOR CURB SECTIONS, ALL EXTRUSIONS SHALL BE A MINIMUM OF 15 FT. BETWEEN SPLICES EXCEPT WHEN NOTED OTHERWISE ON THE SPAN SHEET.

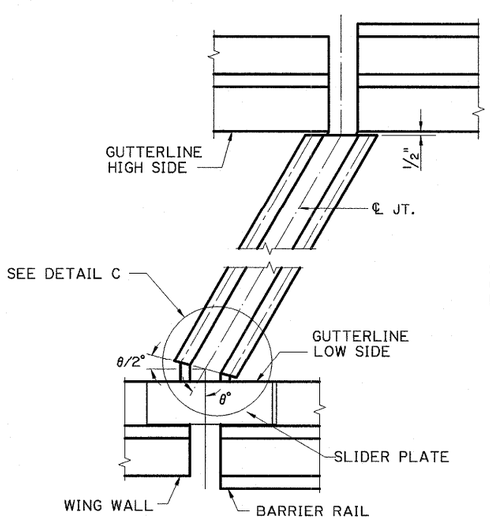

PART PLAN AT END BENTS

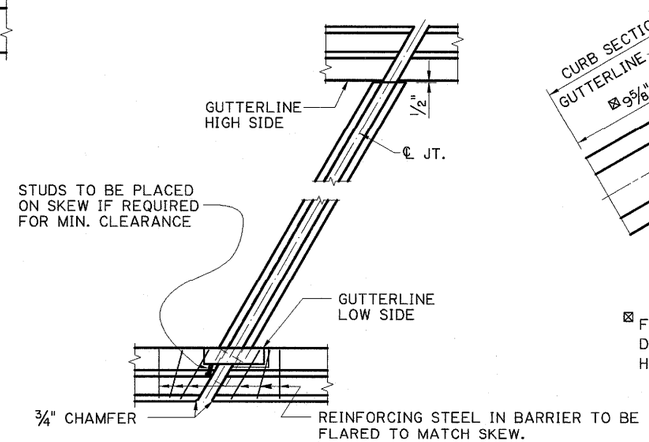

PART PLAN AT INTERIOR JOINT

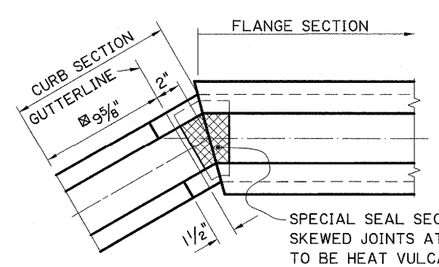

DETAIL "C"

⊠ FOR QUAD BEAM SPANS, THIS DIMENSION SHALL BE THE HEIGHT OF THE EXTRUSION.

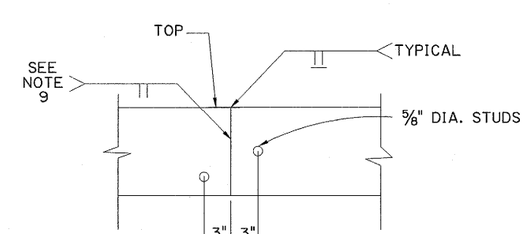

TYPICAL SPLICE

STATE OF LOUISIANA
JENAN NAKHLEH
REG. No. 18692
PROFESSIONAL ENGINEER IN CIVIL ENGINEERING
1/8/2009

FOR INFORMATIONAL PURPOSES ONLY

SHEET NUMBER	
PARISH	
FEDERAL PROJECT	
STATE PROJECT	
DESIGNED J. NAKHLEH	
CHECKED A. NWAFOR	
DETAILED C. deLATOUR	
CHECKED J. NAKHLEH	
DATE 03-14-02	
SHEET 2 OF 2	
NO.	DATE
REVISION DESCRIPTION	BY

STRIP SEAL JOINT DETAILS (4")

SPECIAL REMARKS

SSJ-4

BRIDGE AND STRUCTURAL DESIGN