6/29/2012 08:34

NOT TO SCALE

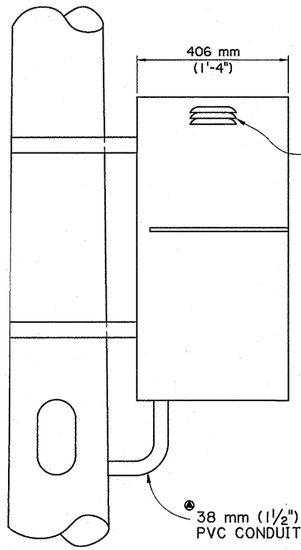

⊛ ALTERNATE LOCATION AND MATERIAL ARE SUBJECT TO THE APPROVAL OF THE DEPARTMENT.

✡ THE LOUVERED VENTS MAY BE LOCATED EITHER ON THE DOOR OR ON THE SIDE OF THE CABINET.

SIDE VIEW

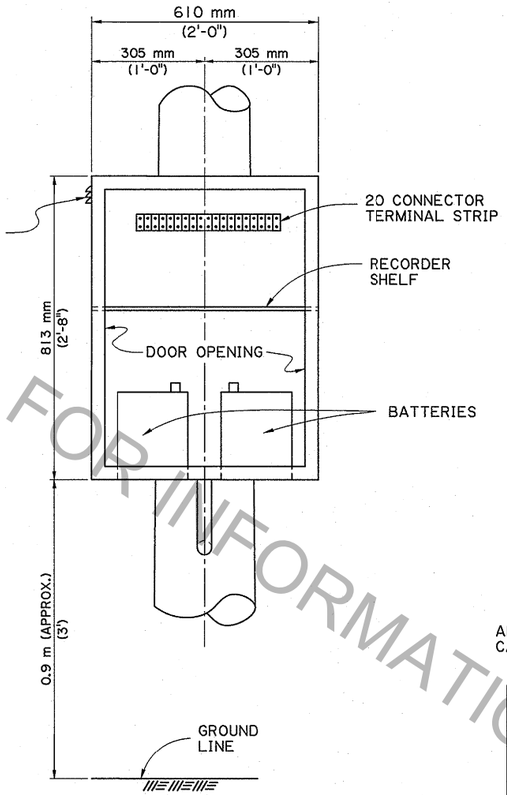

FRONT VIEW

CABINET DETAILS

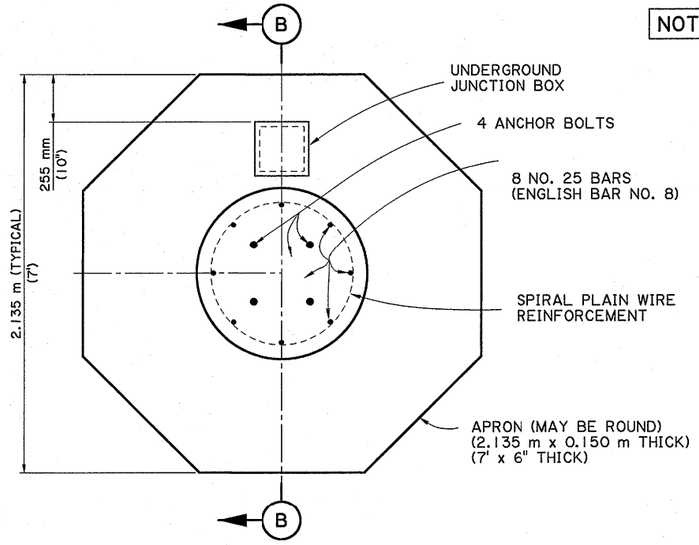

VIEW A-A

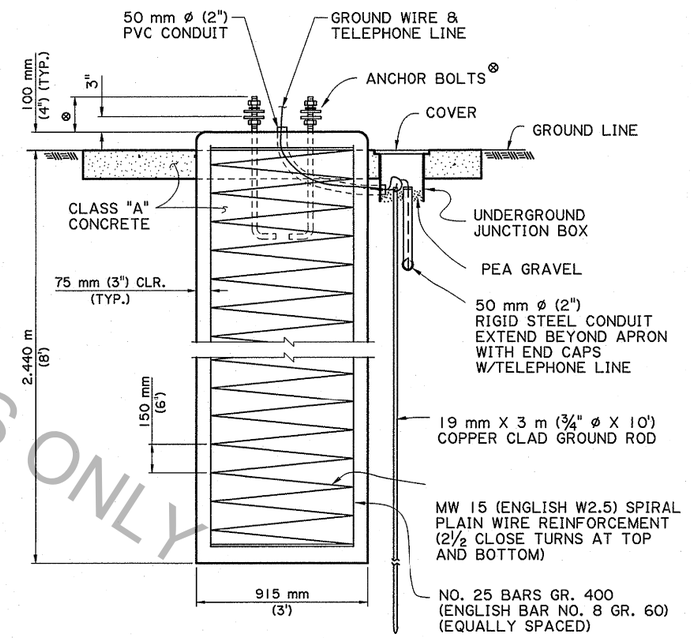

SECTION B-B

⊗ SIZE, LENGTH, AND SPACING OF ANCHOR BOLTS SHALL BE AS RECOMMENDED BY THE POLE MANUFACTURER.

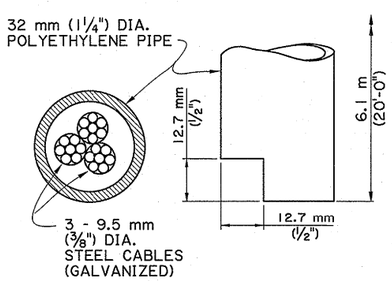

SECTION

NOTCH DETAIL

INTERNAL DAMPER DETAILS

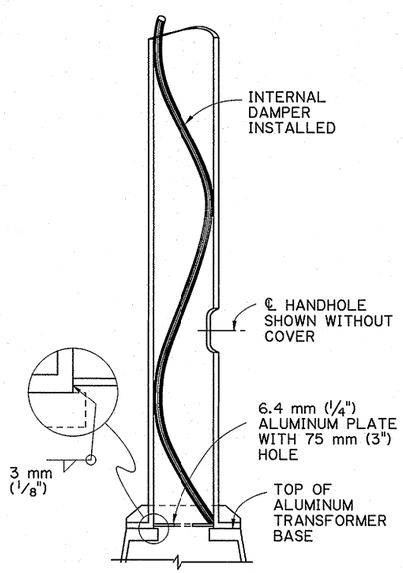

POLE SECTION

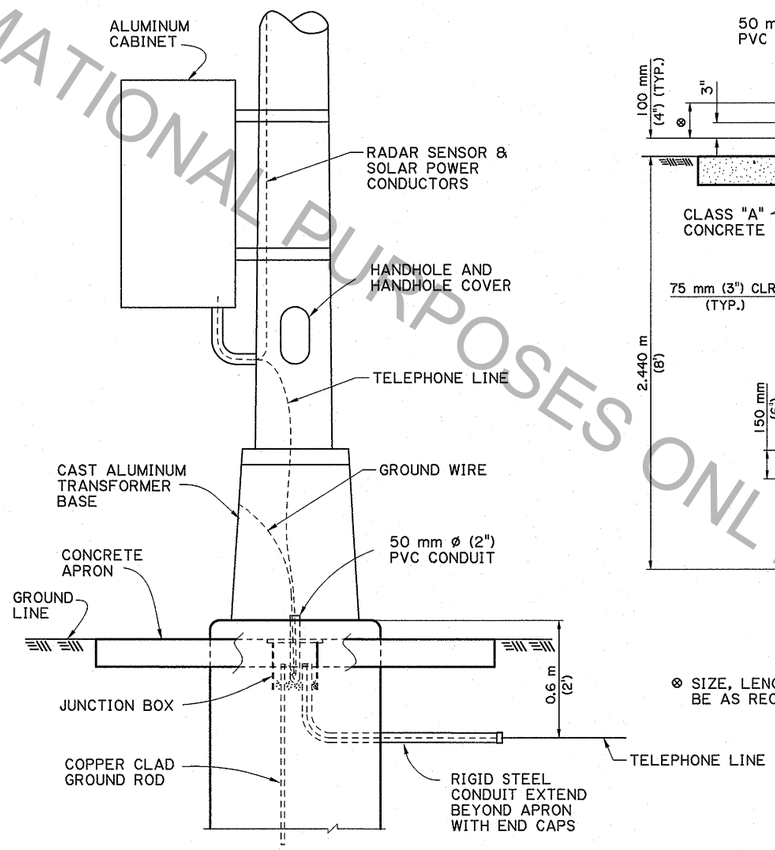

PARTIAL FOOTING DETAIL

STATE OF LOUISIANA
JAMES C. PORTER
REG. No. 10375
REGISTERED PROFESSIONAL ENGINEER IN CIVIL ENGINEERING
06/28/2012

STATE OF LOUISIANA
ANANDA H. HERATH
REG. No. 29042
REGISTERED PROFESSIONAL ENGINEER IN CIVIL ENGINEERING
06/28/2012

FOR INFORMATIONAL PURPOSES ONLY

SHEET NUMBER	PARISH	CONTROL SECTION	STATE PROJECT

DESIGNED J. PORTER
CHECKED A. HERATH
DETAILED J. KOEMPEL
CHECKED J. PORTER
SERIES NUMBER 2 OF 2

NO.	DATE	REVISION OR CHANGE ORDER DESCRIPTION	BY

TRAFFIC RECORDER SYSTEM

BRIDGE & STRUCTURAL DESIGN

IP_PWP:dms55670\Traffic Recorder-2.dgn