50′ SINGLE, 45′X40′DUAL, AND UNDER MAST ARM, STEEL STRAIN POLE STANDARD

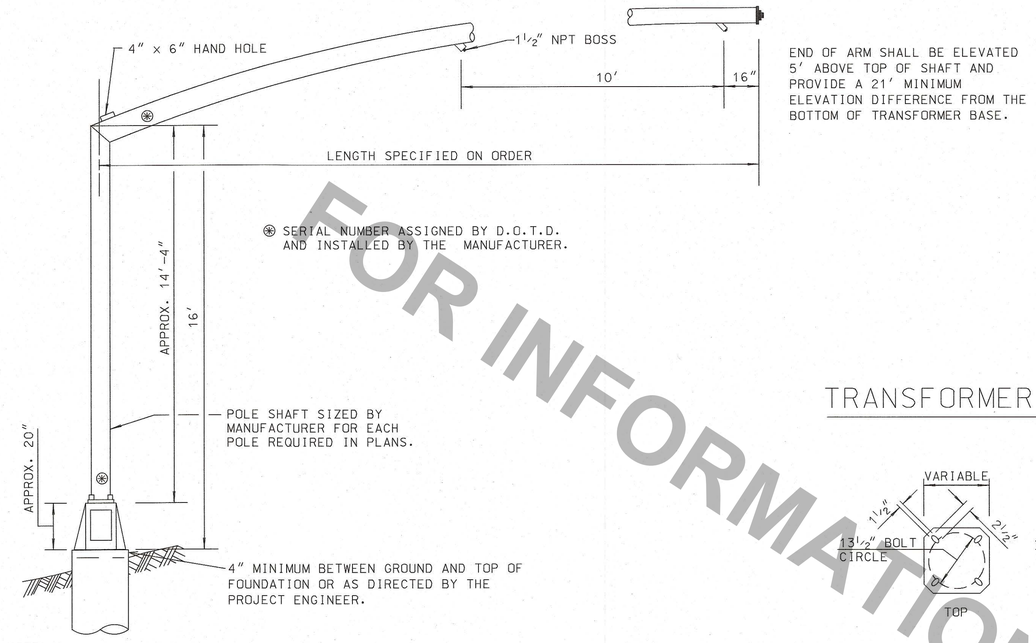

NOTE:

1. ALL BOSSES SHALL BE PLUGGED WITH A 1½″ GALVANIZED STEEL CONDUIT PLUG WITH A SQUARE HEAD HDG. WHEN CABLE IS ROUTED THROUGH THE BOSS A RUBBER COMPRESSION BUSHING SHALL BE USED TO SEAL AND HOLD CABLE IN BOSS. CABLE SHALL BE SECURED TO MAST ARM FROM BOSS TO SIGNAL HEAD WITH ½″ WIDE WEATHER RESISTANT TIE WRAPS.
2. TEN (10) CONDUCTOR SIGNAL CABLE FROM CONTROLLER MAY BE SPLICED IN TRANSFORMER BASE TO TWO (2) - SIX (6) CONDUCTOR SIGNAL CABLES ROUTED TO TWO (2) - THREE (3)SECTION SIGNAL HEADS ON THE MAST ARM. NO OTHER SPLICING SHALL BE ALLOWED.
3. ALL SPLICES SHALL BE MADE WITH AN ALL COPPER OPEN-ENDED COMPRESSION SPLICE CAP INSTALLED TO THE MANUFACTURES RECOMMENDED METHOD AND INSULATED. (WIRE NUTS SHALL NOT BE ALLOWED)

BOSS AND END PLATE DETAIL

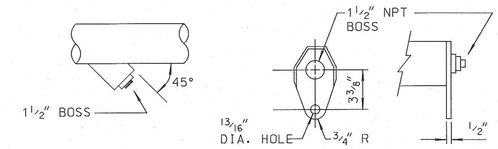

TRANSFORMER BASE DETAIL

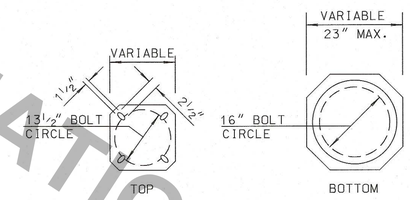

STEEL STRAIN POLE

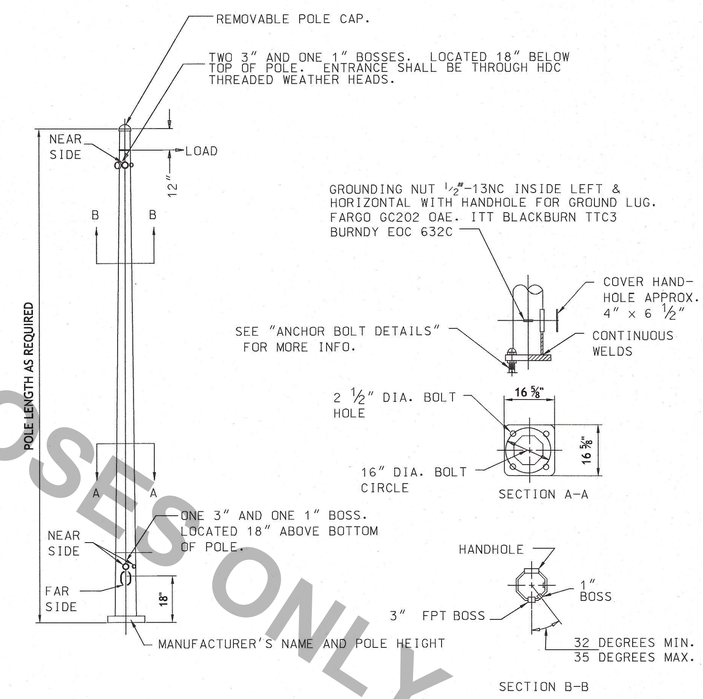

NOTE:

1. STEEL POLE BASEPLATES SHALL HAVE A 16″ DIAMETER BOLT CIRCLE.
2. VENDORS SHALL BE AMERICAN INSTITUTE OF STEEL CONSTRUCTORS (AISC) CERTIFIED.

ROTATABLE BASE

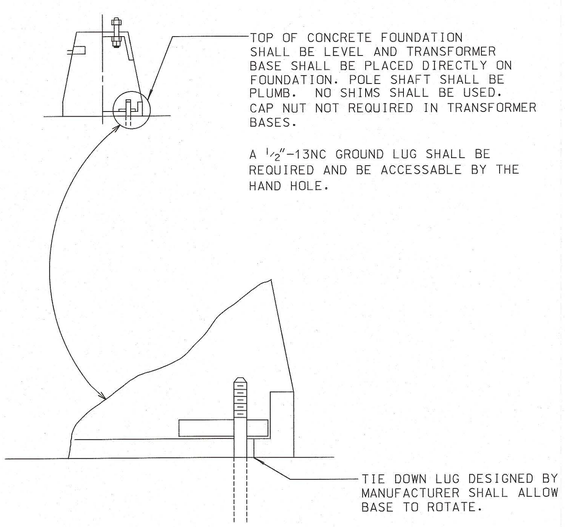

ANCHOR BOLT DETAILS FOR STRAIN POLES AND MAST ARMS

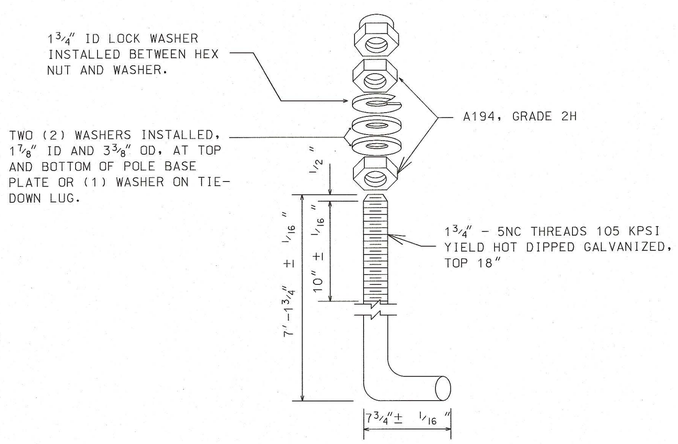

FOR INFORMATIONAL PURPOSES ONLY

STATE OF LOUISIANA
LEI Q. WANG
License No. 33365
PROFESSIONAL ENGINEER
2-19-2015

SHEET NUMBER			
PARISH			
FEDERAL PROJECT			
STATE PROJECT			
DESIGNED S. MCCARROLL	CHECKED D. LORIO	DATE 2/16/2015	
DETAILED S. MCCARROLL	CHECKED L. WANG	SHEET 3 OF 14	

NO.	DATE	REVISION DESCRIPTION	BY

TRAFFIC SIGNAL STANDARD DETAILS
STRAIN POLE AND MAST ARMS 55′ AND UNDER DETAIL
TSD-02

TRAFFIC ENGINEERING

W:\Traffic Signals\Standards\TSD's\2015 TSDs\DGN files\TSD02,02.28.2014.dgn 2/16/2015 14:21