W:\Traffic Signals\Standards\TSD's\2015 TSDs\DGN files\TSD09.rev. 11.15.2013.dgn 2/16/2015 14:22

TYPICAL CONDUIT INSTALLATION ON BRIDGE STRUCTURE

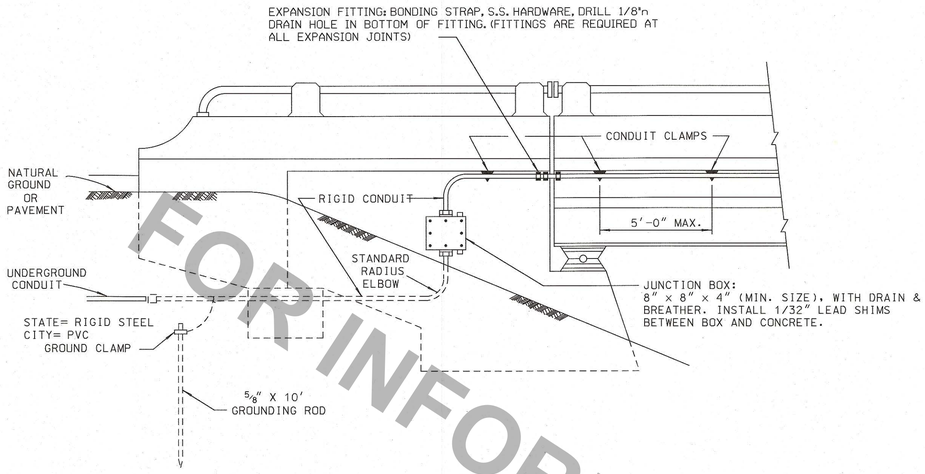

CONDUIT FASTENING DETAIL

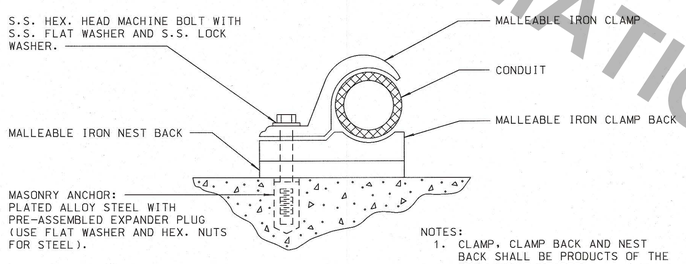

NOTES:
1. CLAMP, CLAMP BACK AND NEST BACK SHALL BE PRODUCTS OF THE SAME MANUFACTURER.
2. FLANGES OF STEEL BEAMS SHALL NOT BE DRILLED.
3. 5'-0" MAX. SPACING.
4. BOLT SCHEDULE:
   3/4" & 1" CLAMPS-----1/4"ø BOLTS
   1-1/4" & 1-1/2" CLAMPS---3/8"ø BOLTS
   2" & LARGER CLAMPS---1/2"ø BOLTS

SUSPENDED BOX INSTALLATION

ALSO USED ON BRIDLE SPAN INSTALLATION

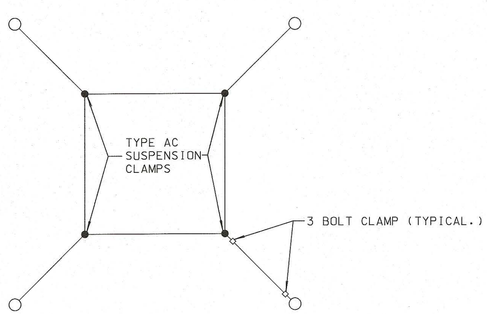

TYPE AC SUSPENSION CLAMP

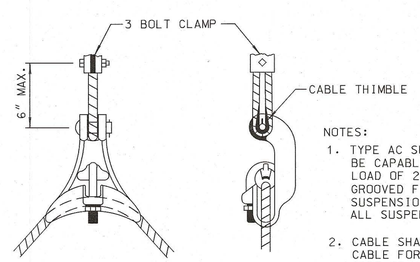

NOTES:
1. TYPE AC SUSPENSION CLAMPS SHALL BE CAPABLE OF WITHSTANDING A TENSILE LOAD OF 25,000 POUNDS AND SHALL BE GROOVED FOR 3/8" CABLE. TYPE AC SUSPENSION CLAMPS SHALL BE USED FOR ALL SUSPENDED BOX INSTALLATIONS.
2. CABLE SHALL HAVE 3' OF SPARE CABLE FORMED AS A LOOP ON EACH SIDE OF CLAMP.

INSTALLATION DETAIL OF MAST ARM ATTACHMENTS FOR SIGN AND SIGNAL BRACKETS

SIGNAL- ISOMETRIC VIEW

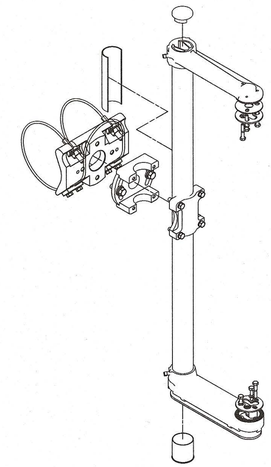

SIGN - SIDE VIEW

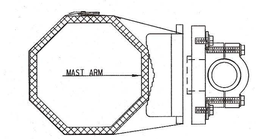

SIGN - FRONT VIEW

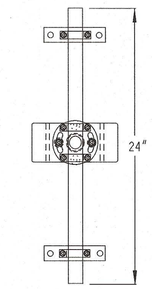

NOTE:
1. BRACKETS SHALL UTILIZE A STRANDED CABLE TO ATTACH BRACKET TO ARM.
2. ATTACHMENTS SHALL BE ADJUSTABLE TO PLUMB.
3. ADDITIONAL SIGN BACKING MAY BE REQUIRED FOR SIGNS LARGER THAN 36". APPROVAL OF PROJECT ENGINEER REQUIRED PRIOR TO INSTALLATION.

SPAN WIRE SIGN BRACKET

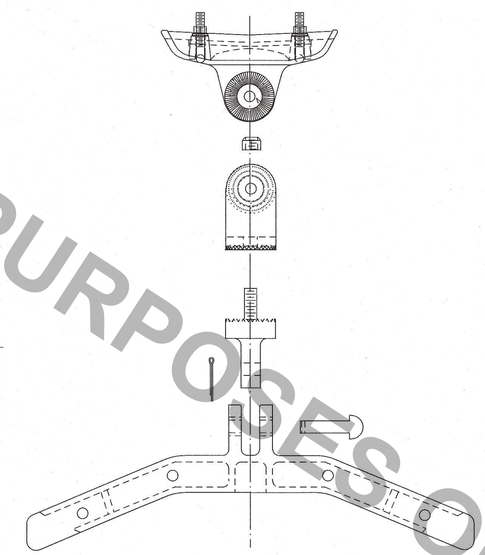

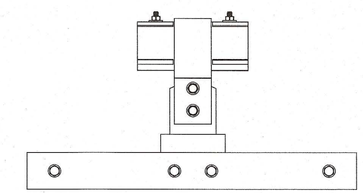

FRONT VIEW

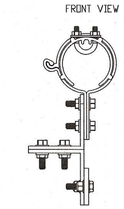

SIDE VIEW

NOTES:
1. ALL MATERIAL FOR DEVICES SHOWN SHALL BE CAST ALUMINUM CONSTRUCTION WITH COATING TO PREVENT OXIDATION.
2. SIGN MOUNTING BRACKET PRE-DRILLED WITH 1/2" HOLES (SEE DRAWING).
3. BOTTOM OF SIGN SHALL BE WEIGHTED WITH STEEL BAR PAINTED TO RESIST CORROSION. BRACKET AND WEIGHT SHALL BE ATTACHED TO SIGN WITH HDG OR STAINLESS STEEL 3/8" BOLTS, WASHERS, AND NUTS.
4. SPAN WIRE SADDLE SHALL BE DESIGNED TO FIT A CABLE RANGE OF 3/8" - 1/2".
5. BRACKET SHALL BE INSTALLED SO THAT THE SIGN IS PLUMB AND PERPENDICULAR TO THE DRIVERS LINE OF VIEW.

STATE OF LOUISIANA
LEI Q. WANG
License No. 33365
PROFESSIONAL ENGINEER
2-19-2015

FOR INFORMATIONAL PURPOSES ONLY

SHEET NUMBER	
PARISH	
FEDERAL PROJECT	
STATE PROJECT	
DESIGNED S. MCCARROLL	
CHECKED D. LORIO	
DETAILED S. MCCARROLL	
CHECKED L. WANG	
DATE 2/16/2015	
SHEET 10 OF 14	

NO.	DATE	REVISION DESCRIPTION	BY

TRAFFIC SIGNAL STANDARD DETAILS

HARDWARE DETAILS

TSD-09

TRAFFIC ENGINEERING