JUNCTION BOX INSTALLATION

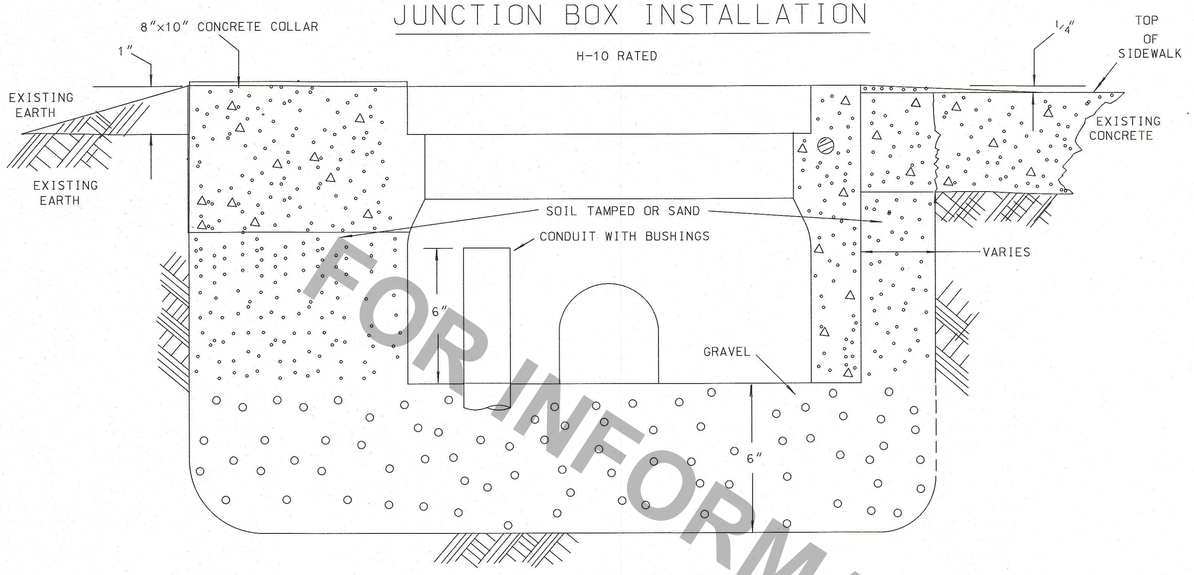

NOTE FOR ALL JUNCTION BOXES:

1. TOP OF BOX TO EXTEND 1/4" ABOVE EXISTING SIDEWALK WITH NEW SIDEWALK SLOPED UP TO TOP OF BOX.
2. DO NOT PLACE JUNCTION BOXES IN THE TRAVELED WAY OR ON SHOULDERS.
3. PROVIDE 8" X 10" CONCRETE COLLARS EXCEPT WITHIN CONCRETE PAVED AREAS. CONCRETE COLLARS SHALL BE PROVIDED AROUND THE TOP PERIMETER OF JUNCTION BOX. CONCRETE COLLAR SHALL BE PAID FOR UNDER THE JUNCTION BOX PAY ITEM.

JUNCTION BOX

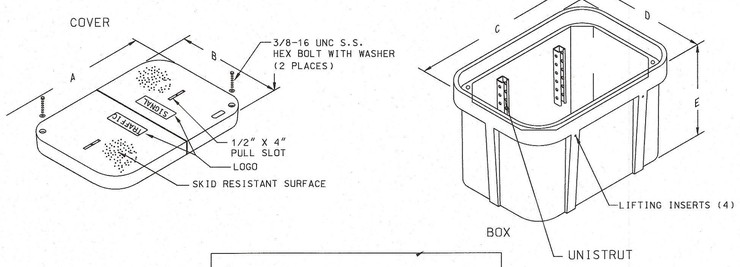

TYPE DIMENSION (IN.) (APPROX.)					
BOX	A	B	C	D	E
E	23 3/4	13 3/4	25	15 1/2	12
F	30 1/2	17 1/2	32 1/4	19 1/4	12
G	35 5/8	24	37 5/8	26	18
H	35 5/8	24	37 5/8	26	36
I	47 5/8	30 1/8	49 5/8	32 1/8	18
J	47 5/8	30 1/8	49 5/8	32 1/8	36

NOTE FOR ALL JUNCTION BOXES:

1. JUNCTION BOX SHALL BE AN APPROVED PRODUCT LISTED ON THE TRAFFIC OPERATIONS APPROVED PRODUCT LIST (TOAPL)USE THE TYPE JUNCTION BOX SHOWN IN PLANS.
2. A MINIMUM OF 6' OF SPARE SIGNAL, LOOP LEAD-IN, 6PR, AND SERVICE CABLE SHALL BE INSTALLED IN EACH JUNCTION BOX.
3. "TRAFFIC SIGNAL" SHALL BE IMPRINTED ON THE JUNCTION BOX BY THE MANUFACTURER.

* NOTE FOR TYPE G, H, I AND J JUNCTION BOXES:

1. TWO PIECE COVER.
2. TWO PIECES OF UNISTRUT MOUNTED ON INSIDE WALL.
3. LIFTING INSERTS ON OUTSIDE OF BOX.
4. PROJECTS WITH FIBER OPTIC COMMUNICATION: INSTALL A MINIMUM OF 50' SPARE FIBER IN TYPE "GG" AND 100' SPARE FIBER IN LARGER JUNCTION BOXES.

BRIDGE/RAILROAD PREEMPTION

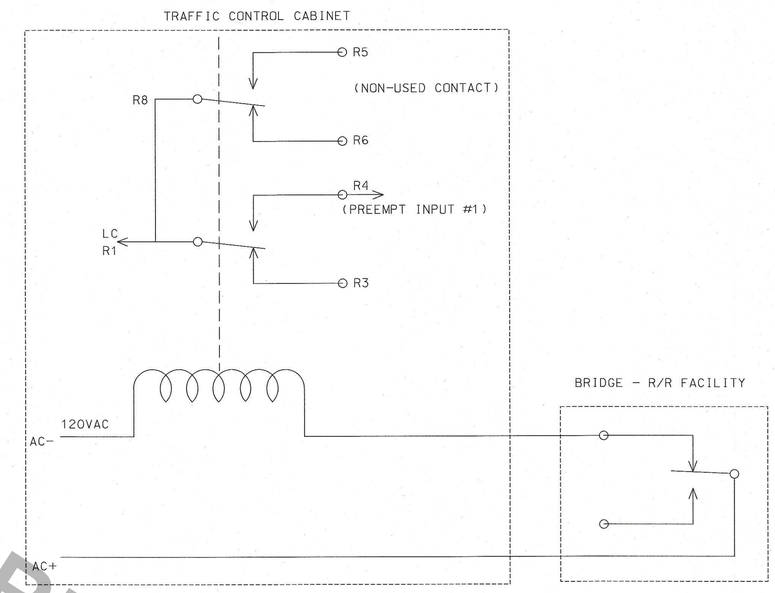

NOTE:

1. RELAYS SHOWN IN NORMAL (NON-PREEMPT) CONDITION
2. PREEMPT RELAY - 2 POLE DOUBLE THROW
3. LC = LOGIC GROUND

STATE OF LOUISIANA
LEI Q. WANG
License No. 33365
PROFESSIONAL ENGINEER
2-19-2015

FOR INFORMATIONAL PURPOSES ONLY

SHEET NUMBER	
PARISH	
FEDERAL PROJECT	
STATE PROJECT	
DESIGNED S. MCCARROLL	
CHECKED D. LORIO	
DETAILED S. MCCARROLL	
CHECKED L. WANG	
DATE 2/16/2015	
SHEET 13 of 14	

NO.	DATE	REVISION DESCRIPTION	BY

STATE OF LOUISIANA DEPARTMENT OF TRANSPORTATION AND DEVELOPMENT

TRAFFIC ENGINEERING

TRAFFIC SIGNAL STANDARD DETAILS

JUNCTION BOX AND PULL BOX

TSD-12

W:\Traffic Signals\Standards\TSD's\2015 TSDs\DGN files\TSD12.rev. 11.15.2013.dgn 2/16/2015 14:22