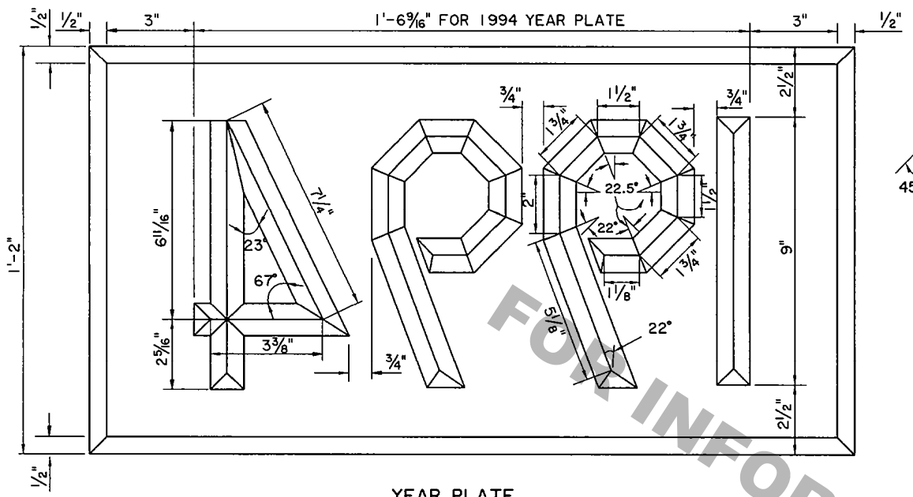

YEAR PLATE

DIMENSIONS SHOWN ARE FOR LARGE YEAR PLATE.
USE ONE HALF (1/2) ABOVE DIMENSIONS FOR SMALL YEAR PLATE.
YEAR PLATE TO CORRESPOND TO YEAR IN WHICH STRUCTURE IS COMPLETED.

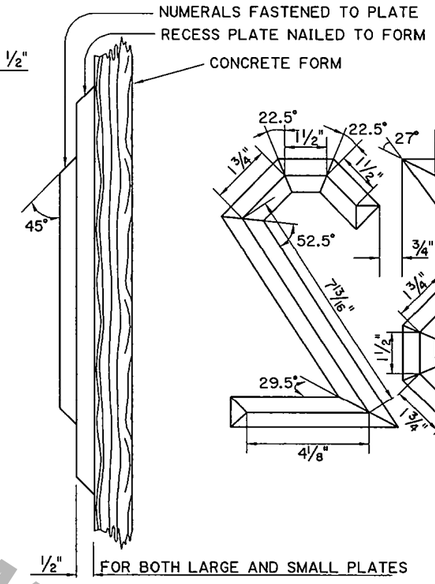

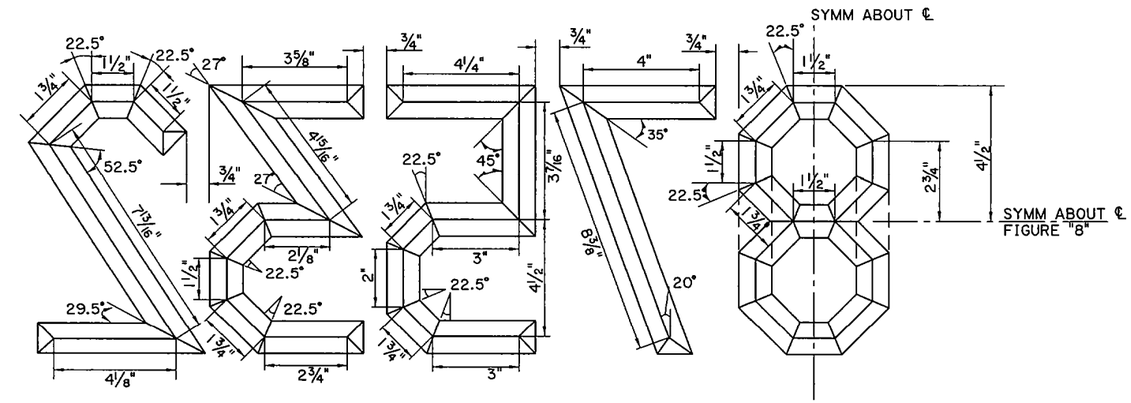

NUMERALS

NOTE:
FIGURE "6" TO BE "9" INVERTED.
FIGURE "0" TO BE MADE USING DASHED LINES INDICATED ON DETAIL OF FIGURE "8."
DIMENSIONS SHOWN ARE FOR LARGE YEAR PLATE.
USE ONE-HALF (1/2) ABOVE DIMENSIONS FOR SMALL YEAR PLATE.

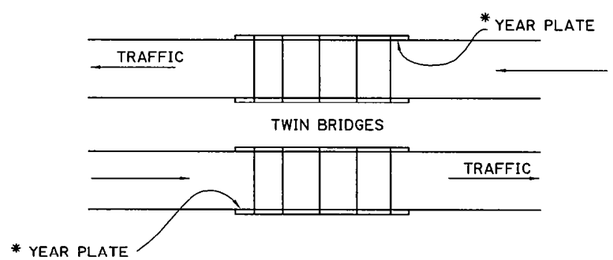

BRIDGE PLAN

*YEAR PLATE ON THE APPROACH SIDE OF BOTH ENDS ON TWO-WAY TRAFFIC BRIDGES.

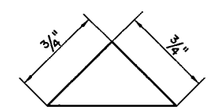

FULL SIZE CROSS-SECTION OF 3/4" CHAMFER STRIP TO BE USED IN CONSTRUCTION OF ALL NUMERALS.

CHAMFER STRIP FOR LARGE YEAR PLATE

FULL SIZE CROSS SECTION OF 3/8" CHAMFER STRIP TO BE USED IN CONSTRUCTION OF ALL NUMERALS.

CHAMFER STRIP FOR SMALL YEAR PLATE

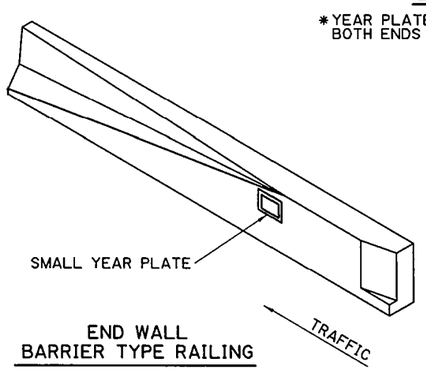

END WALL
BARRIER TYPE RAILING

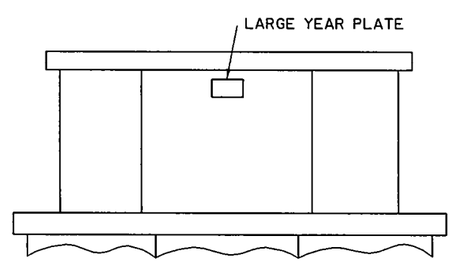

PIER ELEVATION

SKETCHES SHOWING LOCATION OF YEAR PLATE ON VARIOUS CONCRETE STRUCTURES

STATE OF LOUISIANA
PAUL B. FOSSIER, JR.
REG. No. 21028
REGISTERED PROFESSIONAL ENGINEER IN CIVIL ENGINEERING
8/28/00

FOR INFORMATIONAL PURPOSES ONLY

SHEET NUMBER	
PARISH	FEDERAL PROJECT	STATE PROJECT
DESIGNED	CHECKED	DETAILED G. GRASS	CHECKED P. FOSSIER	DATE JULY, 2000	SHEET
NO.	DATE	REVISION DESCRIPTION	BY

YEAR PLATE
FOR CONCRETE STRUCTURES

STANDARD DETAIL YP-01

BRIDGE AND STRUCTURAL DESIGN