21-FEB-2008 13:39

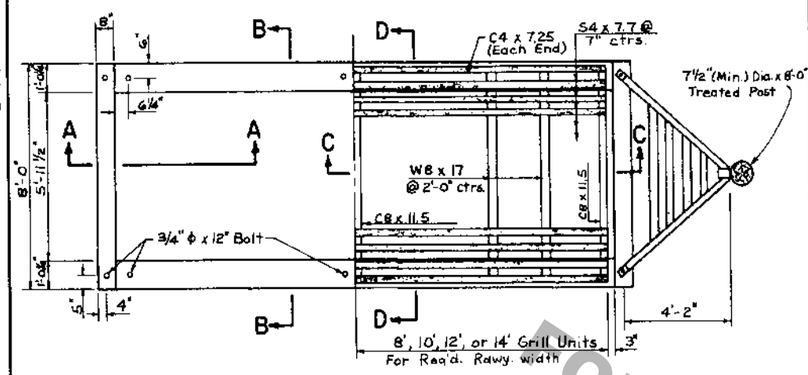

PLAN

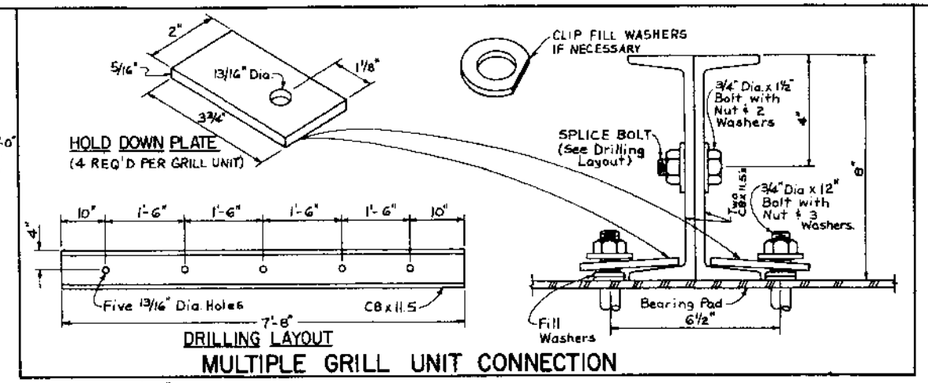

DRILLING LAYOUT

MULTIPLE GRILL UNIT CONNECTION

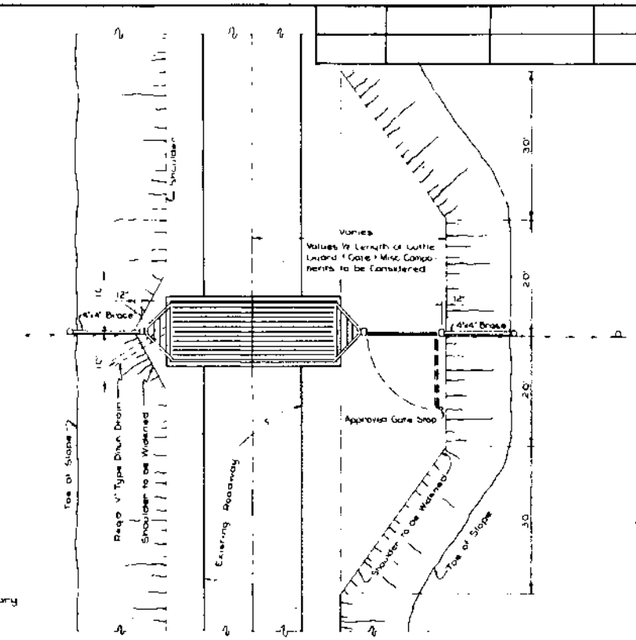

PLAN OF CATTLE GUARD ON STATE SECONDARY OR PARISH ROADS

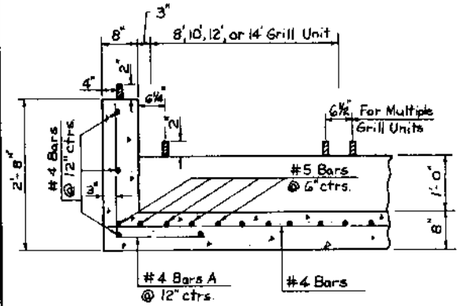

SECTION A-A

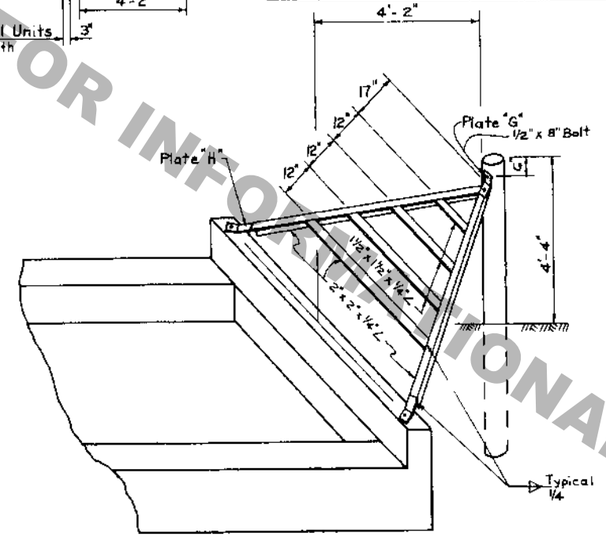

STEEL WING DETAIL

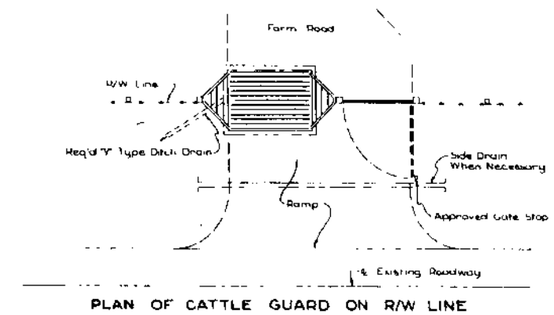

PLAN OF CATTLE GUARD ON R/W LINE

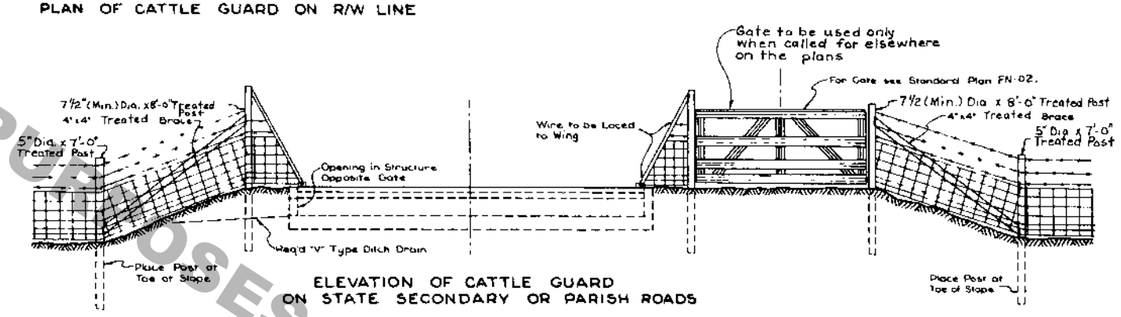

ELEVATION OF CATTLE GUARD ON STATE SECONDARY OR PARISH ROADS

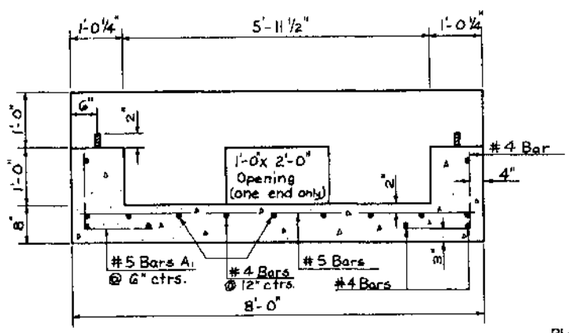

SECTION B-B

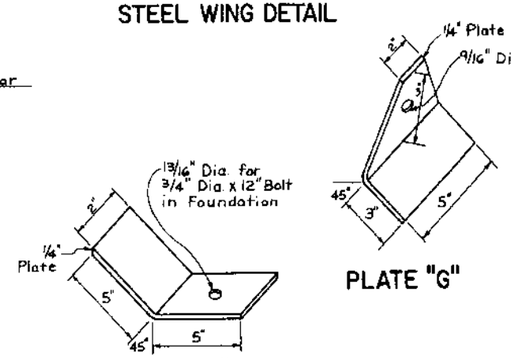

PLATE "G"

PLATE "H"

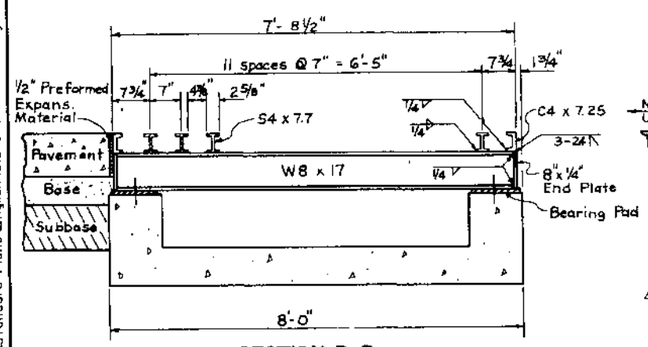

SECTION D-D

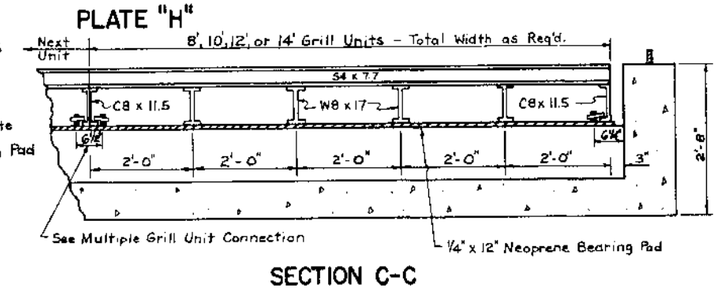

SECTION C-C

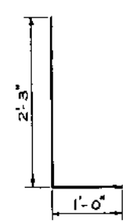

#4 BARS A

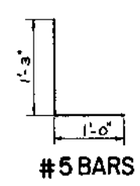

#5 BARS A1

GENERAL NOTES:

Concrete shall be Class "A".

All structural steel shall conform to ASTM A-36.

Painting of Grill Units and Wings shall be an Organic Zinc Primer and Topcoat Systems according to Std. Spec. Section 811 and related Supplemental Specifications.

Welding shall conform to the D.O.T.D. Std. Specifications and the D.O.T.D. Welding Procedures Manual.

DATE	DESCRIPTION	BY
	REVISIONS	

Standard Plan No. KG-01 — SHEET 1 OF 1

CATTLE GUARD

HS20-44 (MS-18) LOADING

DATED Oct. 19, 1981

STATE OF LOUISIANA
DEPARTMENT OF TRANSPORTATION & DEVELOPMENT

DESIGNED CDJ	DETAILED JCM	TRACED KAJ
CHECKED JCM	CHECKED CDJ	CHECKED CDJ

APPROVED Dennis Lt. Tuite, CHIEF ENGINEER — DATE Oct. 19, 1981

FOR INFORMATIONAL PURPOSES ONLY

R:\Standard Plans\English\Old Sheets\KG01.dgn