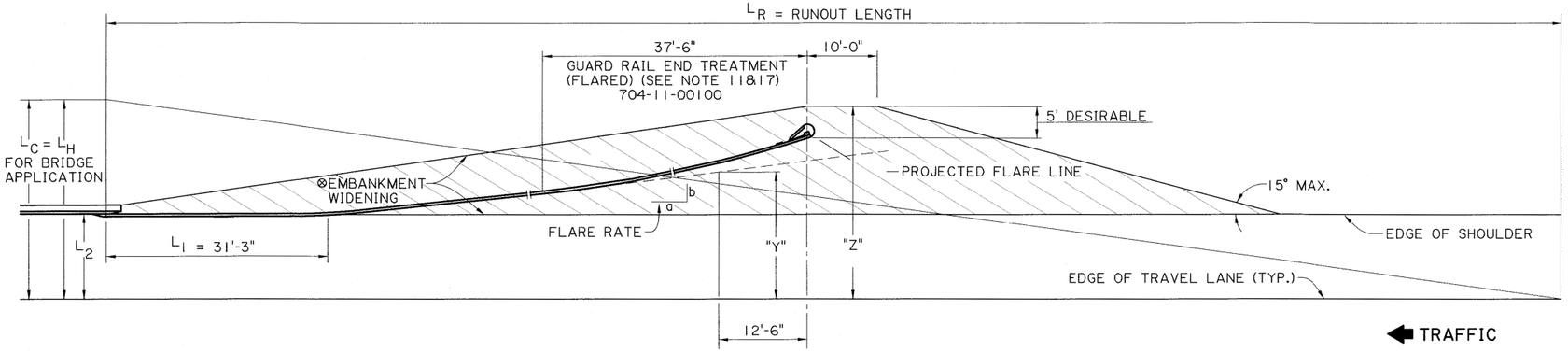

APPROACH GUARD RAIL VARIABLES-PLAN
N.T.S.

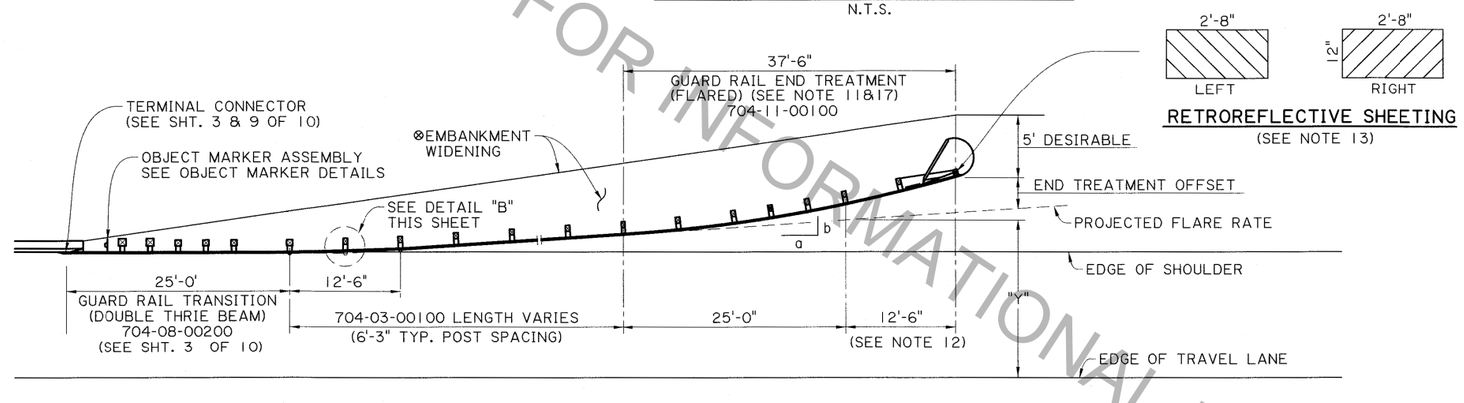

TYPICAL BRIDGE GUARD RAIL TREATMENT-PLAN
N.T.S.

RETROREFLECTIVE SHEETING
(SEE NOTE 13)

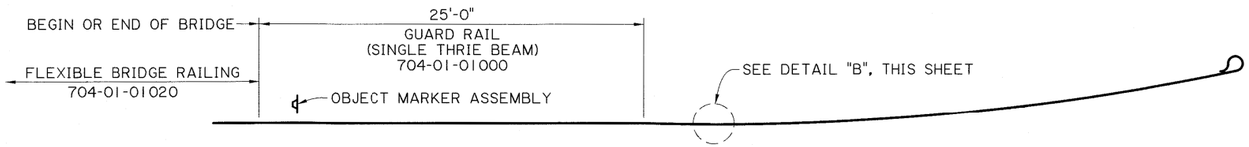

BEAM TRANSITION FOR FLEXIBLE BRIDGE RAILING-PLAN (SEE NOTE 15)
N.T.S.

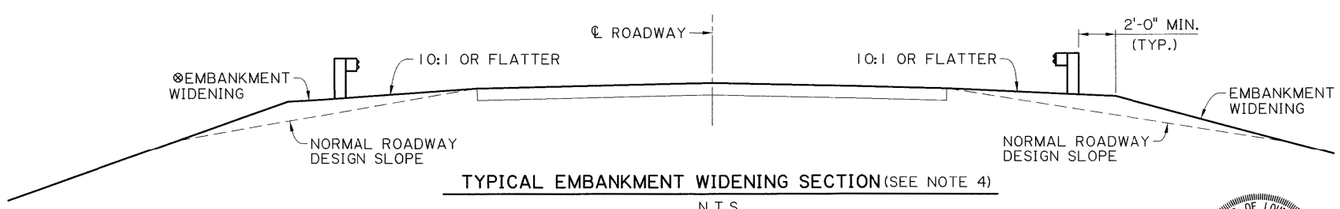

TYPICAL EMBANKMENT WIDENING SECTION (SEE NOTE 4)
N.T.S.

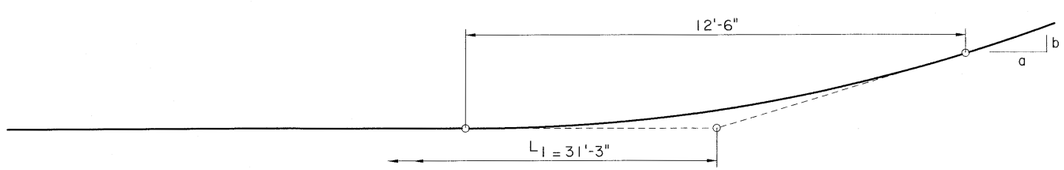

DETAIL "B"

STATE OF LOUISIANA
PAUL B. FOSSIER, JR
License No. 21028
PROFESSIONAL ENGINEER
IN
CIVIL ENGINEERING
7-8-15

GUARD RAIL PAY ITEMS

704-01-01000	GUARD RAIL (SINGLE THRIE BEAM) (3'-1½" POST SPA.)
704-01-01020	GUARD RAIL (SINGLE THRIE BEAM) (6'-3" POST SPA.)
704-01-02000	GUARD RAIL (DOUBLE THRIE BEAM) (3'-1½" POST SPA.)
704-01-02020	GUARD RAIL (DOUBLE THRIE BEAM) (6'-3" POST SPA.)
704-03-00100	BLOCKED OUT W-BEAM GUARD RAIL
704-06-00100	GUARD RAIL ANCHOR SECTIONS (TRAILING END)
704-06-00200	GUARD RAIL ANCHOR SECTIONS (TRAILING END) (SINGLE THRIE BEAM)
704-07-00200	GUARD RAIL BRIDGE ATTACHMENTS (SINGLE THRIE BEAM)
704-08-00200	GUARD RAIL TRANSITIONS (DOUBLE THRIE BEAM)
704-11-00100	GUARD RAIL END TREATMENT (FLARED)
704-11-00105	12'-6" GUARD RAIL END TREATMENT
704-11-00200	GUARD RAIL END TREATMENT (TANGENT)
704-11-00300	GUARD RAIL END TREATMENT (BI-DIRECTIONAL)
NS-800-00120	PIER PROTECTION SYSTEM

GENERAL NOTES

1. LENGTH OF NEED (X) AND OFFSETS "Y" & "Z" SHALL BE COMPUTED IN ACCORDANCE WITH THE EQUATION ON SHEETS 2 OF 10. (X) DIMENSIONS TO BE USED SHALL BE A MULTIPLE OF 6'-3". TO FIND THE REQUIRED LENGTH OF NEED (X) WHEN OFFSET "Y" HAS TO BE SET, USE THE EQUATION X = (LH-"Y") LR/LH.
2. MINIMUM LENGTH OF GUARD RAIL IN ANY CASE SHALL BE 75'-0" (LENGTH OF NEED X= 62'-6"), FOR END TREATMENT SYSTEMS LESS THAN 50'-0", THE REMAINING LENGTH TO MEET THE 75'-0" MIN. WILL BE BASED ON USING ADDITIONAL W-BEAM BLOCKED OUT GUARD RAIL 704-03-00100 PLACED BETWEEN THE TRANSITION AND END TREATMENT. THE COST OF ADDITIONAL W-BEAM GUARD RAIL SHALL BE PAID FOR UNDER THE END TREATMENT PAY ITEM.
3. SEE TYPICAL INSTALLATION ELSEWHERE IN THESE PLANS.
4. EMBANKMENT WIDENING TO PROVIDE SLOPES NOT STEEPER THAN 10:1 IS REQUIRED TO MAINTAIN PROPER RAIL TO VEHICLES POSITION. WIDENING MAY BE ACCOMPLISHED AS DETERMINED BY THE DESIGNER OR THE PROJECT ENGINEER.
5. SEE OPPOSING TRAFFIC GUARD RAIL REQUIREMENTS ON SHEET 2 OF 10 FOR METHOD OF CALCULATING LENGTH OF NEED (X) AND OFFSET (Y) OF RAIL LEFT SIDE WHEN TRAFFIC IS TWO WAY.
6. PAY ITEMS FOR ALL GUARD RAIL COMPONENTS ARE TO BE IN ACCORDANCE WITH LAYOUT DETAILS AND/OR QUANTITY TABLES FURNISHED WITH PROJECT PLANS. GUARD RAIL PAY ITEMS SHALL INCLUDE ALL MATERIALS, LABOR AND EQUIPMENT REQUIRED TO COMPLETE THE GUARD RAIL INSTALLATION AS SHOWN ON THE PLANS.
7. LONGITUDINAL DIMENSIONS FOR GUARD RAIL ARE MEASURED ALONG THE FACE OF RAILING
8. THE QUANTITY FOR THE EMBANKMENT WIDENING AT BRIDGE ENDS IS INCLUDED IN THE EMBANKMENT QUANTITY OF THE ROADWAY.
9. FOR BRIDGES WITH GUARD RAILS IN URBAN AREAS WITH DESIGN SPEED OF 45 mph OR LESS, SEE DOTD EDSM NO. II. 3.1.4 FOR DESIGN INFORMATION.
10. FOR GUARD RAIL INFORMATION FOR EXISTING HIGHWAYS, SEE DOTD EDSM No. II. 3.1.3 FOR DESIGN INFORMATION.
11. A TANGENT END TREATMENT (704-11-00200) MAY BE USED AS AN ALTERNATE TO THE FLARED END TREATMENT. A ZERO END TREATMENT OFFSET AND A ZERO FLARE RATE (A/B = 0) IS REQUIRED WHEN THE TANGENT END TREATMENT IS USED AND THE LENGTH OF NEED "X" SHALL BE CALCULATED BASED ON A "ZERO" FLARE RATE.
12. THE POINT WITHIN THE GUARD RAIL END TREATMENT WHERE LENGTH OF NEED TERMINATES MAY VARY WITH EACH TYPE OF GUARD RAIL END TREATMENT. THE 12'-6" LENGTH APPLIES TO MOST END TREATMENT. HOWEVER, REGARDLESS OF THE TYPE OF END TREATMENT USED, THIS POINT SHALL BE LOCATED AT THE SAME STATION ON THE ROADWAY.
13. THE RETROREFLECTIVE ADHESIVE SHEETING (12" X 2'-8") (TYPE III HIGH INTENSITY OBJECT MARKER PATTERN) SHALL BE APPLIED TO NOSE AFTER CURVING. SEE SECTION 1015 OF THE LATEST LA. STD. SPECS. FOR ROADS AND BRIDGES FOR SPECIFICATIONS AND THE SHEETING MANUFACTURERS RECOMMENDATIONS FOR INSTALLATION. FOR PATTERN DETAIL, SEE OBJECT MARKER DETAILS.
14. UNLESS OTHERWISE NOTED, ALL GUARD RAIL COMPONENTS SHALL CONFORM TO THE REQUIREMENTS OF THE AASHTO-AGC-ARTBA JOINT COOPERATIVE COMMITTEE, "A GUIDE TO STANDARDIZED HIGHWAY BARRIER RAIL HARDWARE", CURRENT EDITION.
15. 704-01-01000 IS USED IN LIEU OF 704-08-00200 FOR BRIDGES WITH FLEXIBLE BRIDGE RAILING (REINFORCED CONCRETE BRIDGE RAILING IS CONSIDERED TO BE RIGID.)
16. ⊗ GUARD RAIL INSTALLATIONS MAY BE PAVED BY USING INCIDENTAL CONCRETE PAVING (4"THICK) (706-03-00100) OR 4" MIN. ASPHALTIC CONCRETE. THE INCIDENTAL CONCRETE OR ASPHALT WILL BE USED IF A LAYOUT DETAIL, PAY ITEM AND QUANTITY IS INDICATED IN THE PLANS. SEE SHEET 10 FOR REQUIRED POST DETAILS WHEN PAVING IS USED AROUND POSTS.
17. GUARDRAIL END TREATMENT SHALL BE SELECTED FROM THE DOTD APPROVED MATERIALS LIST (AML) UNLESS OTHERWISE NOTED IN THE PLANS.

FOR INFORMATIONAL PURPOSES ONLY

DATE	REVISION DESCRIPTION	BY
3-2-15	ADDED NOTE NO. 17 AND REVISED PAY ITEMS	P.F.

APPROVED BY CHIEF ENGINEER: Janice P. Williams DATE: 7-13-2015

SHEET NUMBER

PARISH | CONTROL SECTION | STATE PROJECT

DESIGNED P. FOSSIER
CHECKED K. BRAUNER
DETAILED C. OWENS
CHECKED P. FOSSIER
SERIES NUMBER MAR. 2015
1 OF 10

HIGHWAY GUARD RAILS

GR-200

BRIDGE & STRUCTURAL DESIGN

IP_PWP:d0591368\BD.1.1.1.0.01_raster.dgn
07:57
8/6/2015

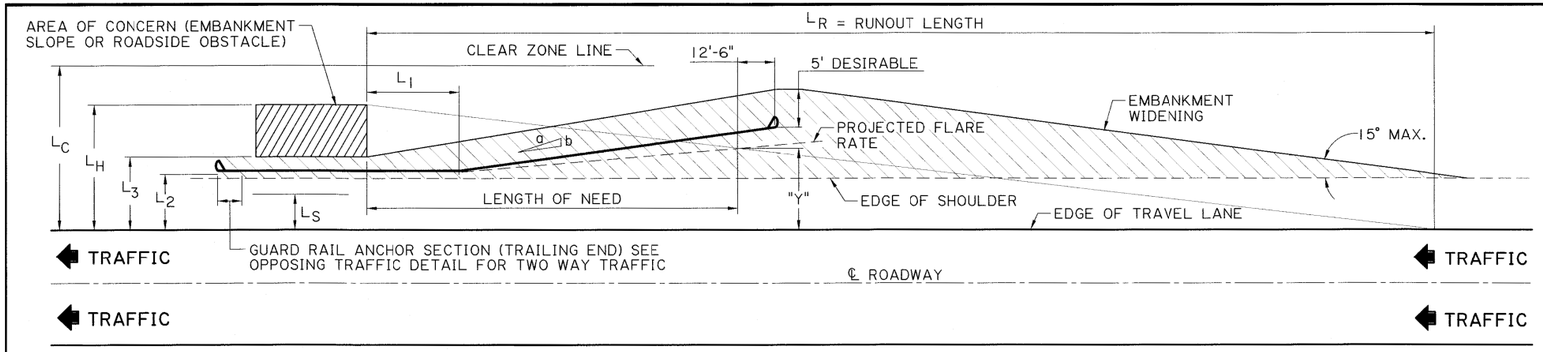

APPROACH TRAFFIC GUARD RAIL REQUIREMENTS-PLAN

N.T.S.

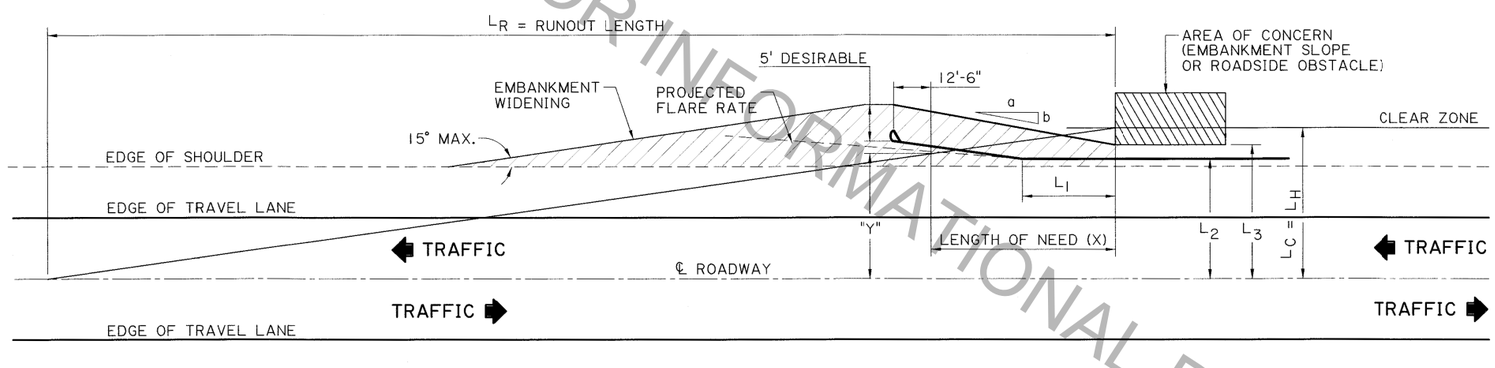

OPPOSING TRAFFIC GUARD RAIL REQUIREMENTS-PLAN

N.T.S.

TABLE 3

L_R = RUNOUT LENGTH

DESIGN SPEED (MPH)	DESIGN TRAFFIC VOLUME (ADT)			
	OVER 10000 VPD	5000-10000 VPD	1000-5000 VPD	UNDER 1000 VPD
	RUNOUT LENGTH L_R (FT.)	RUNOUT LENGTH L_R (FT.)	RUNOUT LENGTH L_R (FT.)	RUNOUT LENGTH L_R (FT.)
70	360	330	290	250
60	300	250	210	200
50	230	190	160	150
40	160	130	110	100
30	110	90	80	70

TABLE 4

SHYLINE OFFSET & FLARE RATES

DESIGN SPEED (MPH)	L_S SHYLINE OFFSET (FT.)	⊞ MAXIMUM FLARE RATE (a:b) FOR BARRIER INSIDE SHYLINE	MAXIMUM FLARE RATE (a:b) FOR BARRIER BEYOND SHYLINE	
			⊠ RIGID BARRIERS	□ SEMI- RIGID BARRIERS
70	9	30:1	20:1	15:1
60	8	26:1	18:1	14:1
55	7	24:1	16:1	12:1
50	6.5	21:1	14:1	11:1
45	6	18:1	12:1	10:1
40	5	16:1	10:1	8:1
30	4	13:1	8:1	7:1

⊠ SUCH AS CONCRETE BARRIER UNITS
□ SUCH AS W BEAM OR THRIE BEAM GUARD RAIL SYSTEMS

TABLE 2

⊕ HORIZONTAL CURVE ADJUSTMENTS

$CZ_c = (L_c)(K_{cz})$

WHERE:
CZ_c = CLEAR ZONE ON OUTSIDE OF CURVATURE, FEET
L_c = CLEAR ZONE ON TANGENT SECTION, FEET (TABLE 1)
K_{cz}

K_{cz} = CURVE CORRECTION FACTOR

RADIUS (FT)	DESIGN SPEED (MPH)					
	40	45	50	55	65	70
2950	1.1	1.1	1.1	1.2	1.2	1.2
2300	1.1	1.1	1.2	1.2	1.2	1.3
1910	1.1	1.2	1.2	1.2	1.3	1.4
1640	1.1	1.2	1.2	1.3	1.3	1.4
1475	1.2	1.2	1.3	1.3	1.4	1.5
1315	1.2	1.2	1.3	1.3	1.4	
1150	1.2	1.2	1.3	1.4	1.5	
985	1.2	1.3	1.4	1.5	1.5	
820	1.3	1.3	1.4	1.5		
660	1.3	1.4	1.5			
495	1.4	1.5				
330	1.5					

STATE OF LOUISIANA
PAUL B. FOSSIER, JR
License No. 21028
PROFESSIONAL ENGINEER
IN
CIVIL ENGINEERING
7-8-15

NOTES:

1. ON TWO-WAY TRAFFIC "Y" IS MEASURED FROM THE CENTERLINE OF THE ROADWAY TO THE GUARD RAIL FOR THE OPPOSING TRAFFIC. THEREFORE, "Y" FOR GUARD RAIL ON THE LEFT SIDE OF A BRIDGE WITH TWO-WAY TRAFFIC IS MEASURED FROM THE CENTERLINE OF THE ROADWAY.
2. EQUATIONS FOR COMPUTING LENGTH OF NEED (X) AND OFFSETS (Y&Z). (ALL DIMENSIONS ARE IN FEET)

$$X = \frac{L_H + (\frac{b}{a})(L_1) - (L_2)}{(\frac{b}{a}) + (\frac{L_H}{L_R})} \qquad "Y" = L_H - (\frac{L_H}{L_R})(X)$$

$$"Z" = "Y" + \frac{b}{a}(12.5') + 9'$$

L_1 = LENGTH OF TANGENT SECTION OF RAIL IN ADVANCE OF HAZARD.
L_2 = DISTANCE FROM EDGE OF TRAVEL LANE TO TANGENT SECTION OF RAIL.
L_3 = DISTANCE FROM EDGE OF TRAVEL LANE TO OBSTACLE. IF $L_3 > L_C$ NO GUARD RAIL IS REQUIRED FOR ONCOMING TRAFFIC.
L_R = RUNOUT LENGTH
L_C = REQUIRED CLEAR ZONE (TABLE 1)
L_H = IS THE DISTANCE FROM THE EDGE OF THE TRAVELED WAY (EOP) TO THE LATERAL EXTENT OF THE HAZARD.
$L_H = L_C$ FOR BRIDGE APPLICATION, EXCEPT IN SPECIAL CASES SEE SHEET 1 OF 10 FOR DETAILS.
L_S = SHY LINE DISTANCE MEASURED FROM TRAVEL LANE.

⊞ 3. FLARE RATES SHOWN FOR BARRIERS INSIDE THE SHY LINE ARE DESIRABLE RATES AND MAY BE WAIVED IF THE GUARD RAIL LENGTH BECOMES TOO LONG FOR A GIVEN SITUATION.

⊕ 4. SEE SHEET NO. 5 OF 10 FOR FORMULAS FOR COMPUTING GUARD RAIL IN A CURVE.

5. FOR FURTHER INFORMATION CONCERNING TABLES 1-4, REFERENCE LATEST EDITION OF AASHTO ROADSIDE DESIGN GUIDE.

TABLE 1

CLEAR ZONE DISTANCE (Lc)
(IN FEET FROM EDGE OF TRAVELED LANE)

SPEED (MPH)	DESIGN ADT	⊗ FORESLOPE		⊗ BACKSLOPE		
		6H:1V OR FLATTER	5H:1V TO 4H:1V	3H:1V	4H:1V TO 5H:1V	6H:1V OR FLATTER
40 OR LESS	UNDER 750	7 - 10	7 - 10	7 - 10	7 - 10	7 - 10
	750-1500	10 - 12	12 - 14	10 - 12	10 - 12	10 - 12
	1500-6000	12 - 14	14 - 16	12 - 14	12 - 14	12 - 14
	OVER 6000	14 - 16	16 - 18	14 - 16	14 - 16	14 - 16
45 TO 50	UNDER 750	10 - 12	12 - 14	8 - 10	8 - 10	10 - 12
	750-1500	14 - 16	16 - 20	10 - 12	12 - 14	14 - 16
	1500-6000	16 - 18	20 - 26	12 - 14	14 - 16	16 - 18
	OVER 6000	20 - 22	24 - 28	14 - 16	18 - 20	20 - 22
55	UNDER 750	12 - 14	14 - 18	8 - 10	10 - 12	10 - 12
	750-1500	16 - 18	20 - 24	10 - 12	14 - 16	16 - 18
	1500-6000	20 - 22	24 - 30	14 - 16	16 - 18	20 - 22
	OVER 6000	22 - 24	* 26 - 32	16 - 18	20 - 22	22 - 24
60	UNDER 750	16 - 18	20 - 24	10 - 12	12 - 14	14 - 16
	750-1500	20 - 24	* 26 - 32	12 - 14	16 - 18	20 - 22
	1500-6000	26 - 30	*32 - 40	14 - 18	18 - 22	24 - 26
	OVER 6000	*30 - 32	*36 - 44	20 - 22	24 - 26	26 - 28
65 TO 70	UNDER 750	18 - 20	20 - 26	10 - 12	14 - 16	14 - 16
	750-1500	24 - 26	*28 - 36	12 - 16	18 - 20	20 - 22
	1500-6000	*28 - 32	*34 - 42	16 - 20	22 - 24	26 - 28
	OVER 6000	*30 - 34	*38 - 46	22 - 24	26 - 30	28 - 30

*WHERE A SITES SPECIFIC INVESTIGATION INDICATES A HIGH PROBABILITY OF CONTINUING ACCIDENTS OR SUCH OCCURRENCES ARE INDICATED BY ACCIDENT HISTORY, THE DESIGNER MAY PROVIDE CLEAR ZONE DISTANCES GREATER THAN SHOWN IN TABLE 1. CLEAR ZONES MAY BE LIMITED TO 30 FEET FOR PRACTICALITY AND TO PROVIDE A CONSISTENT ROADWAY TEMPLATE IF PREVIOUS EXPERIENCE WITH SIMILAR PROJECTS OR DESIGNS INDICATES SATISFACTORY PERFORMANCE.

⊗ BACKSLOPE MAY ALSO BE REFERRED TO AS A CUT SLOPE AND FORESLOPE AS A FILL SLOPE.

FOR INFORMATIONAL PURPOSES ONLY

SHEET NUMBER	
PARISH	
CONTROL SECTION	
STATE PROJECT	
DESIGNED P. FOSSIER / CHECKED K. BRAUNER	
DETAILED C. OWENS / CHECKED P. FOSSIER	
SERIES NUMBER 2 OF 10	MARCH 2015

DATE	REVISION DESCRIPTION	BY
3-2-15	REVISED TABLES 1,2,3,4, SHY LINE NOTE	P.F.

APPROVED BY CHIEF ENGINEER: Jennie P. Williams DATE: 7-13-2015

HIGHWAY GUARD RAILS
GUARD RAIL TABLES AND LAYOUTS

GR-200

BRIDGE & STRUCTURAL DESIGN

IP_PWP:d0591368\BD.1.1.1.0.02_raster.dgn
8/6/2015 07:58

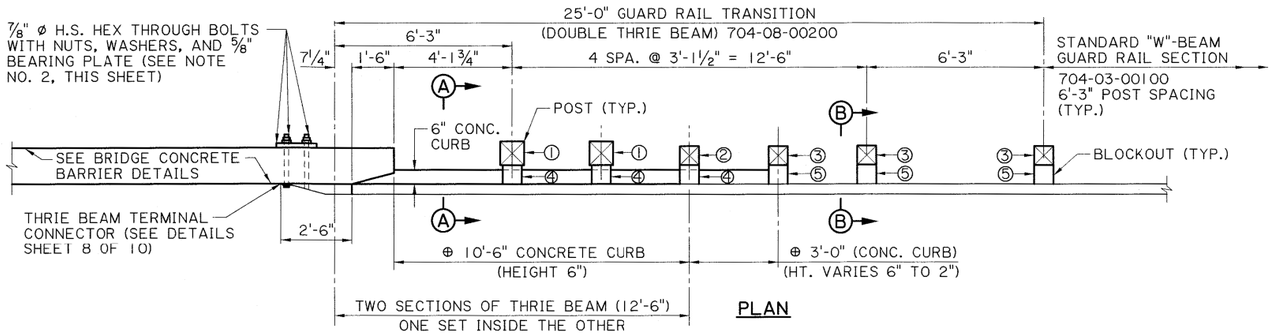

PLAN

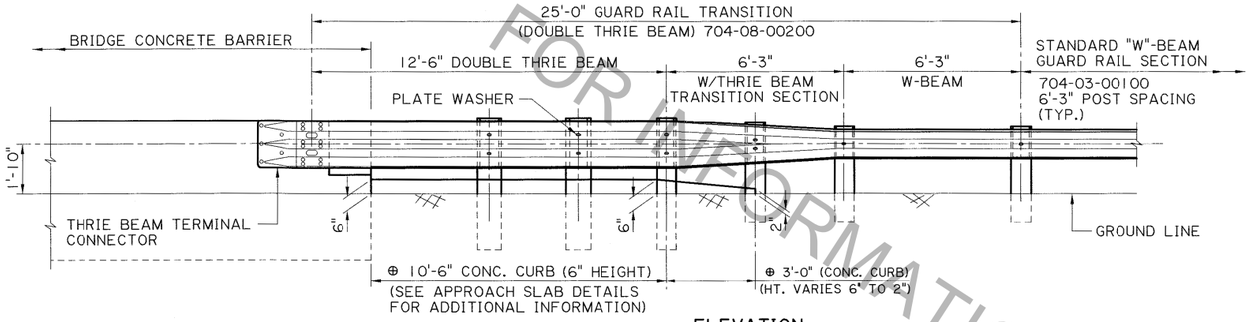

ELEVATION

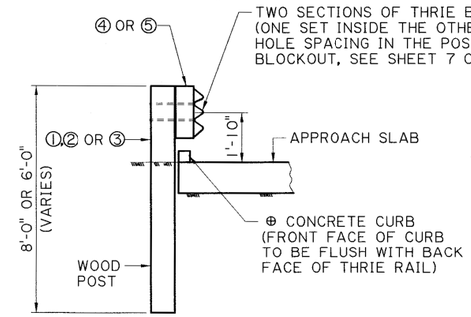

SECTION A-A

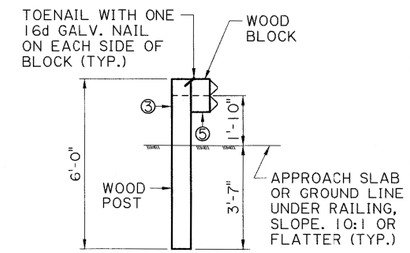

SECTION B-B

WOOD POST & WOOD BLOCKOUT

(POST & BLOCKOUT SIZE VARY IN TRANSITION, SEE PLAN VIEW)

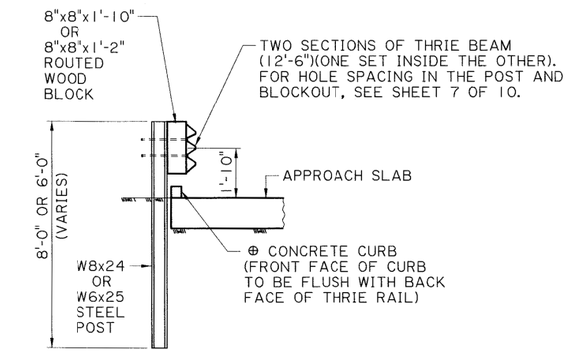

SECTION A-A

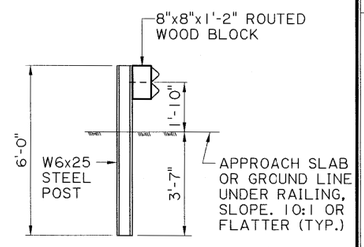

SECTION B-B

STEEL POST & ROUTED WOOD BLOCKOUT ALTERNATE

(POST & BLOCKOUT SIZE VARY IN TRANSITION, SEE PLAN VIEW)

NOTES

1. THIS GUARD RAIL TRANSITION IS APPROPRIATE FOR CONNECTION TO THE CONCRETE BARRIER SHAPE AS SHOWN. SEE BRIDGE BARRIER DETAILS BR-01 & BR-02 FOR INFORMATION.
2. 7/8" ø H.S. BOLTS FOR CONCRETE BARRIER AND THRIE BEAM TERMINAL CONNECTOR SHALL BE ASTM A449. FOR 5/8" STEEL BEARING PLATE, SEE SHEET 9 OF 10. GALVANIZING SHALL BE IN ACCORDANCE WITH ASTM A153.

*3. STEEL POST ALTERNATES: STEEL POSTS ARE ALLOWED AS AN ALTERNATE TO WOOD POSTS. USE W8 x 24 STEEL POST ALTERNATE FOR 10" x 10" WOOD POST. USE W6 x 25 STEEL POST ALTERNATE FOR 8" x 8" WOOD POST. USE SAME LENGTHS AS WOOD POSTS.

4. BLOCKOUTS: USE WOOD BLOCKOUTS ONLY, STEEL AND RECYCLED BLOCKOUTS ARE NOT PERMITTED FOR THE GUARDRAILTRANSITION. ALL WOOD BLOCKOUTS ARE REQUIRED TO BE ROUTED WHEN WHEN USED WITH STEEL POSTS.
5. INTERMIXING OF STEEL AND WOOD POST IN THE TRANSITION SECTION IS NOT ALLOWED.

⊕6. FOR GUARD RAIL TRANSITION CONSTRUCTED WITH NEW APPROACH SLAB, CONCRETE CURB TO BE USED AND TO BE PAID FOR UNDER APPROACH SLAB PAY ITEM. FOR GUARD RAIL TRANSITION CONSTRUCTED WHEN APPROACH SLAB OR PAVEMENT IS EXISTING AND A NEW CURB IS NEEDED, THE NEW ASPHALT CURB ALTERNATE SHALL BE PAID UNDER AN ASPHALTIC CONCRETE PAY ITEM AS INDICATED IN THE PLANS.

*WOOD POST & WOOD BLOCKOUT FOR GUARDRAIL TRANSITION	
NO.	SIZE (WIDTHxDEPTHxLENGTH)
①	10" x 10" x 8'-0" POST
②	8" x 8" x 8'-0" POST
③	8" x 8" x 6'-0" POST
④	8" x 8" x 1'-10" BLOCKOUT
⑤	8" x 8" x 1'-2" BLOCKOUT

*SEE NOTE FOR STEEL POST ALTERNATE

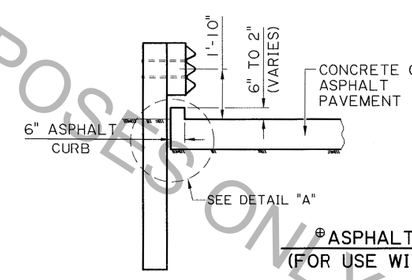

⊕ASPHALT CURB ALTERNATE - SECTION A-A

(FOR USE WITH CONCRETE OR ASPHALT PAVEMENT)

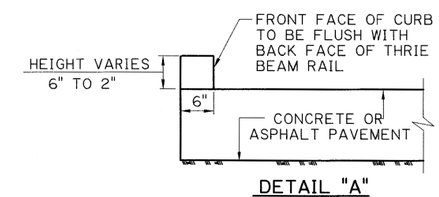

DETAIL "A"

N.T.S.

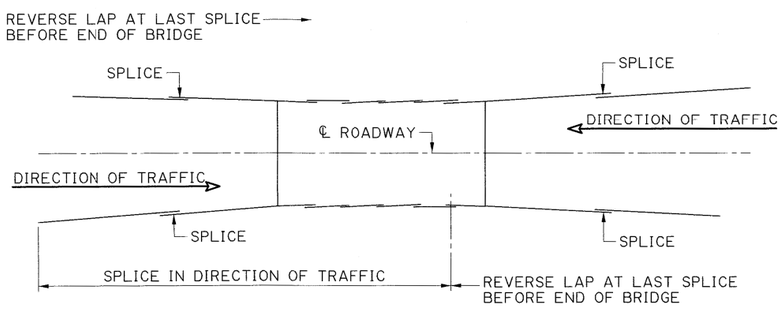

LAYOUT SHOWING DIRECTION OF GUARD RAIL SPLICE FOR TWO WAY TRAFFIC

N.T.S.

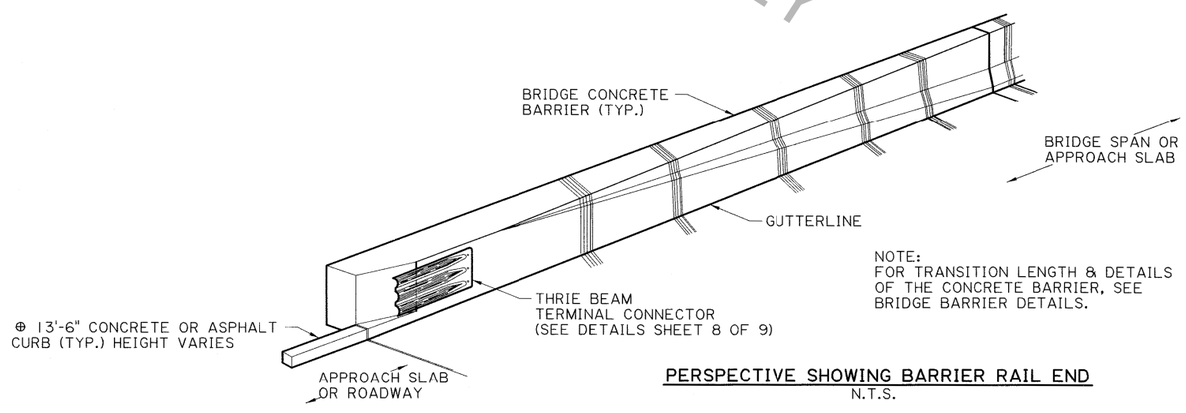

NOTE:
FOR TRANSITION LENGTH & DETAILS OF THE CONCRETE BARRIER, SEE BRIDGE BARRIER DETAILS.

PERSPECTIVE SHOWING BARRIER RAIL END

N.T.S.

FOR INFORMATIONAL PURPOSES ONLY

STATE OF LOUISIANA PAUL B. FOSSIER, JR License No. 21023 PROFESSIONAL ENGINEER IN CIVIL ENGINEERING 7-8-15

SHEET NUMBER

PARISH	CONTROL SECTION	STATE PROJECT

DESIGNED P. FOSSIER
CHECKED K. BRAUNER
DETAILED C. OWENS
CHECKED P. FOSSIER
SERIES NUMBER MARCH 2015
3 OF 10

3-2-15 DATE
REVISED GUARDRAIL HEIGHT AND CURB DETAIL REVISION DESCRIPTION
P.F. BY
DATE: 7-13-2015
APPROVED BY CHIEF ENGINEER:

HIGHWAY GUARD RAILS
THRIE BEAM GUARD RAIL TRANSITION TO BRIDGE RAIL
GR-200

BRIDGE & STRUCTURAL DESIGN

07:59
8/6/2015
IP_PWP:d0591368\BD.1.1.1.0.03_raster.dgn

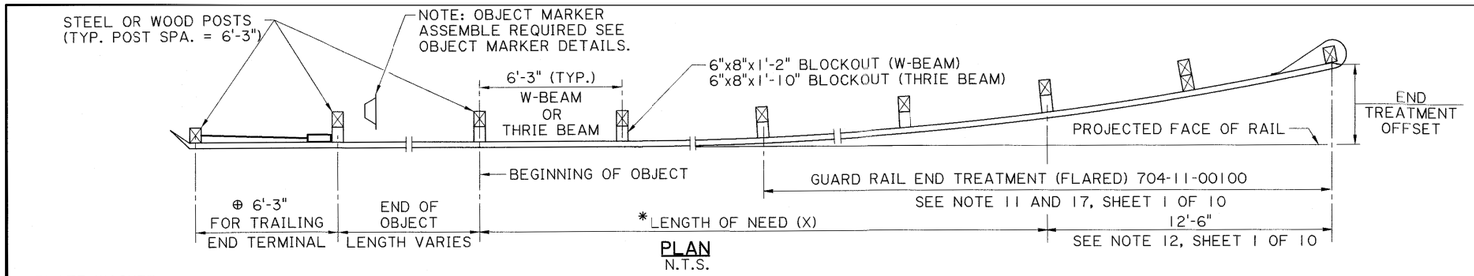

PLAN
N.T.S.

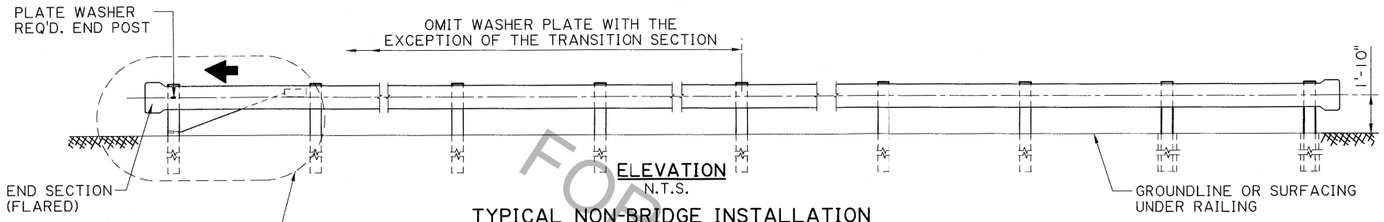

ELEVATION
N.T.S.

TYPICAL NON-BRIDGE INSTALLATION

* SEE SHT. 3 OF 10 FOR BRIDGE BARRIER OR OTHER CONCRETE BARRIER TO GUARDRAIL TRANSITION DETAILS.

⊕ USE GUARDRAIL END TREATMENT IF WITHIN CLEAR ZONE OR AS SHOWN ON GUARDRAIL LAYOUT.

NOTES:

1. INTERMIXING OF STEEL AND WOOD POSTS IN ANY ONE SECTION OF THE GUARD RAIL SHALL NOT BE PERMITTED.
2. GUARD RAIL SHALL NOT BE PLACED CLOSER TO THE TRAVELED WAY THAN THE OUTSIDE EDGE OF THE SHOULDER. THE OFFSET TO THE FACE OF THE NOSE OF THE END TREATMENT SHALL BE AS PER THE MANUFACTURER'S RECOMMDATIONS, FROM THE PROJECTED FACE OF THE RAIL.
3. ALL MATERIAL DIMENSIONS ARE SUBJECT TO MANUFACTURING TOLERANCES.
4. WOOD POST AND BLOCKS: TREATMENT SHALL BE IN ACCORDANCE WITH DOTD STANDARD SPECIFICATIONS SECTION 1014. POST AND BLOCKS SHALL EITHER BE ROUGH SAWED (UNPLANED) OR S4S WITH NOMINAL DIMENSION INDICATED.THE SIZE TOLERANCE OF ROUGH SAWED TIMBER IN THE DIRECTION OF THE BOLT HOLES SHALL NOT BE MORE THAN +1/4".
5. STEEL POST AND WOOD BLOCKS (THRIE BEAM ONLY): BLOCK MOUNTS TO POST WITH 2-BOLTS, RAIL MOUNTS TO BLOCK WITH BOLT ON APPROACHING TRAFFIC SIDE OF BLOCK AND POST WEB.
6. FOR DETAILS OF SOIL PLATE, ANCHOR PLATE, AND 3/4" CABLE, SEE SHT. 9 OF 10. FOR BREAKAWAY TIMBER POST AND GALV. STEEL TUBE, SEE SHT. 7 OF 10.

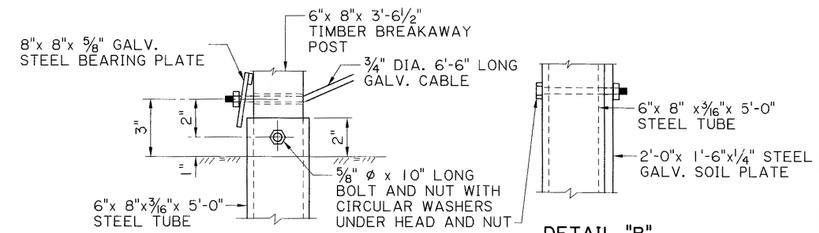

DETAIL "A"
N.T.S.

DETAIL "B"
N.T.S.

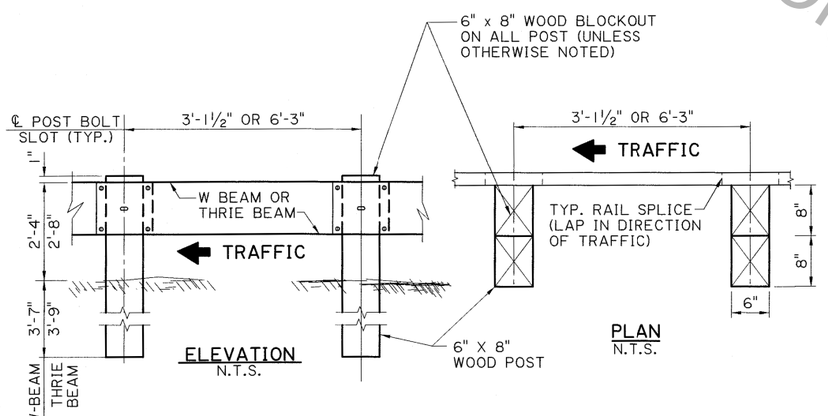

ELEVATION
N.T.S.

PLAN
N.T.S.

DETAIL OF 6" x 8" WOOD POSTS AND WOOD BLOCKS-STD. GUARD RAIL

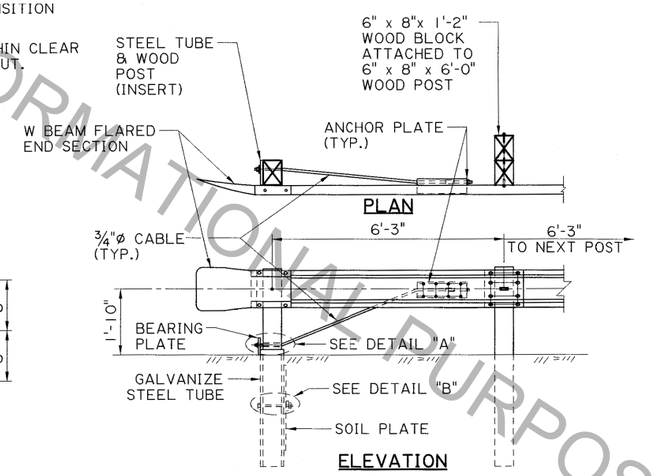

PLAN

ELEVATION

TYPICAL W BEAM TRAILING END
N.T.S.

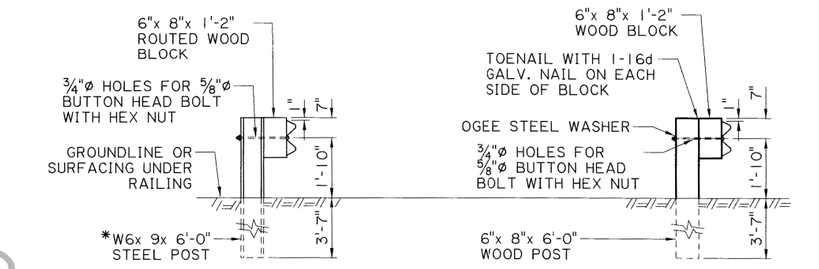

TYPICAL SECTION AT STEEL POST & WOOD BLOCK (W-BEAM)

*W6x8.5 MAY BE USED AS AN ALTERNATE

TYPICAL SECTION AT WOOD POST & WOOD BLOCK (W-BEAM)
N.T.S.

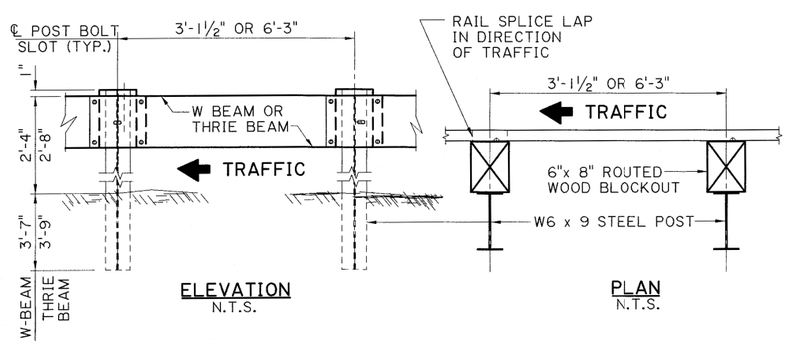

ELEVATION
N.T.S.

PLAN
N.T.S.

DETAIL OF W6 x 9 STEEL POSTS AND WOOD BLOCKS-STD. GUARD RAIL

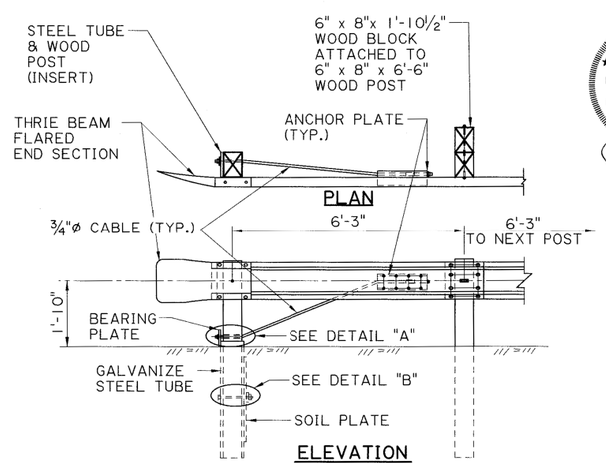

PLAN

ELEVATION

TYPICAL THRIE BEAM TRAILING END
N.T.S.

STATE OF LOUISIANA
PAUL B. FOSSIER, JR
License No. 21028
PROFESSIONAL ENGINEER
IN
CIVIL ENGINEERING
7-3-15

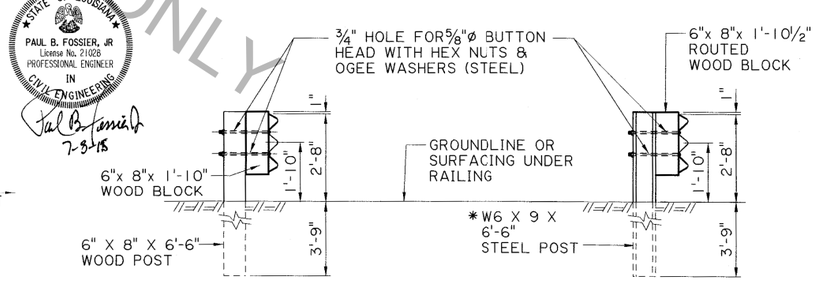

TYPICAL SECTION AT WOOD POST & WOOD BLOCK (THRIE BEAM)
N.T.S.

TYPICAL SECTION AT STEEL POST & WOOD BLOCK (THRIE BEAM)

W6x 8.5 MAY BE USED AS ALTERNATE FOR STEEL POST ATTACHED TO CONCRETE, SEE SHT. 10 OF 10.
N.T.S.

STANDARD W-BEAM & THRIE BEAM GUARD RAIL SECTIONS

(FOR BRIDGE CONCRETE BARRIER TO GUARD RAIL TRANSITION DETAILS, SEE SHT. 3 OF 10)

FOR INFORMATIONAL PURPOSES ONLY

SHEET NUMBER			
PARISH	CONTROL SECTION	STATE PROJECT	
DESIGNED P. FOSSIER / CHECKED K. BRAUNER	DETAILED C. OWENS / CHECKED P. FOSSIER	SERIES NUMBER MARCH 2015 4 OF 10	

DATE	REVISION DESCRIPTION	BY
3-2-15	REVISED W-BEAM AND THRIE BEAM GUARDRAIL HEIGHT	P. F.

APPROVED BY CHIEF ENGINEER: R. W. Williams DATE: 7-13-2015

HIGHWAY GUARD RAILS
GUARD RAIL LAYOUT AND SECTIONS

GR-200

BRIDGE AND STRUCTURAL DESIGN

08:01 8/6/2015

IP_PWP:d0591368\BD.1.1.1.0.04_raster.dgn

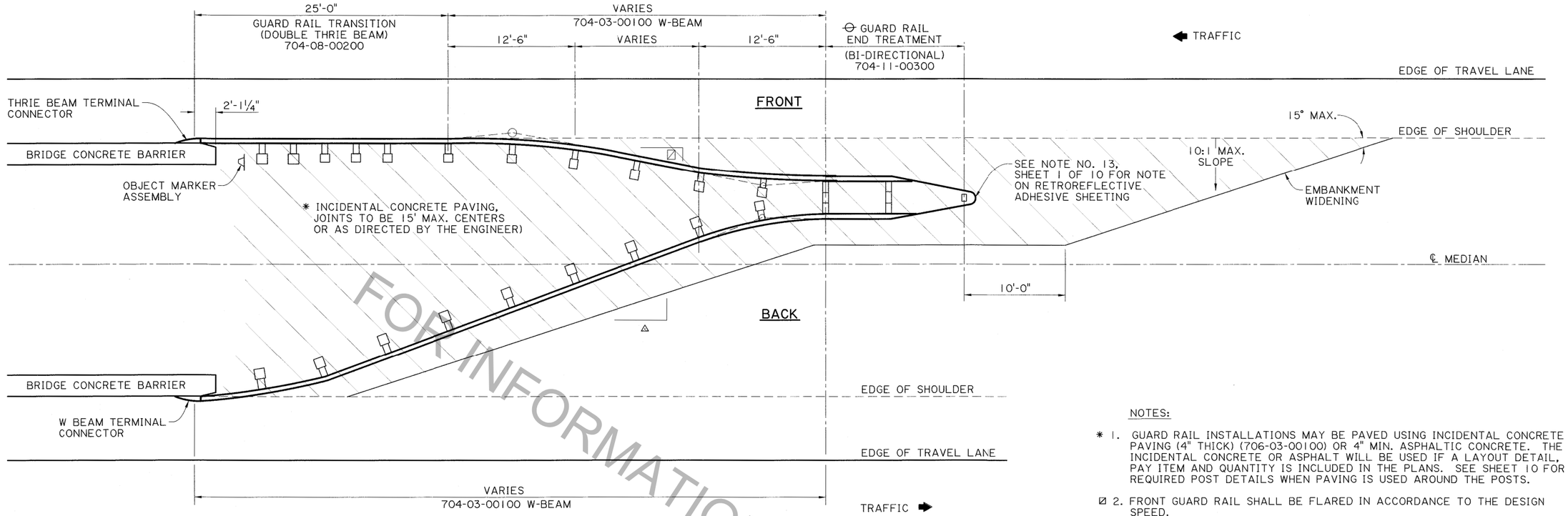

BRIDGE END GUARD RAIL ON MEDIAN SIDE

NOTES:

* 1. GUARD RAIL INSTALLATIONS MAY BE PAVED USING INCIDENTAL CONCRETE PAVING (4" THICK) (706-03-00100) OR 4" MIN. ASPHALTIC CONCRETE. THE INCIDENTAL CONCRETE OR ASPHALT WILL BE USED IF A LAYOUT DETAIL, PAY ITEM AND QUANTITY IS INCLUDED IN THE PLANS. SEE SHEET 10 FOR REQUIRED POST DETAILS WHEN PAVING IS USED AROUND THE POSTS.

2. FRONT GUARD RAIL SHALL BE FLARED IN ACCORDANCE TO THE DESIGN SPEED.

3. GUARD RAIL SHALL BE FLARED TO MEET THE FRONT GUARD RAIL.

4. USE A GUARD RAIL END TREATMENT (BI-DIRECTIONAL), ITEM 704-11-00300.

5. THE BACKSIDE GUARD RAIL AND END TREATMENT MAY BE ELIMINATED AND A GUARD RAIL END TREATMENT (FLARED OR TANGENT) MAY BE UTILIZED INSTEAD ON THE ONCOMING END OF BRIDGE IF THE BACK OF THE GUARD RAIL END TREATMENT IS OUT OF THE CLEAR ZONE (Lc) FOR THE OPPOSING TRAFFIC.

6. BOLT HOLE LOCATIONS ON THE CONCRETE BARRIER STANDARD ARE FOR THE THRIE BEAM TERMINAL CONNECTOR. WHEN W BEAM TERMINAL CONNECTORS ARE USED THE LOCATION OF THESE HOLES SHALL BE ADJUSTED TO FIT THE BOLT HOLE PATTERN FOR THE W BEAM TERMINAL CONNECTOR AS SHOWN ON SHEET 8 OF 10.

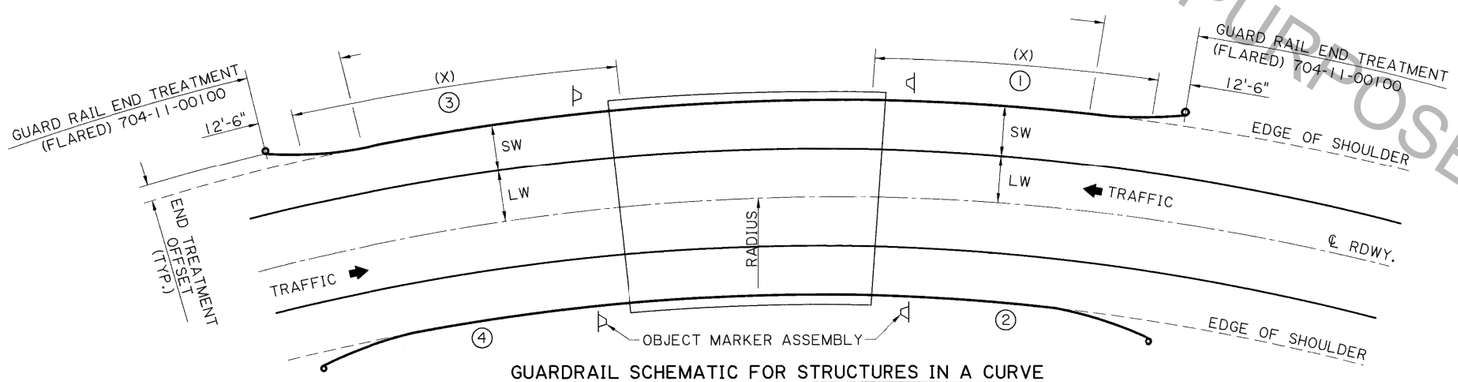

GUARDRAIL SCHEMATIC FOR STRUCTURES IN A CURVE

N.T.S.

FORMULA FOR COMPUTING GUARD RAILS IN A CURVE

① ② $A = \cos^{-1}\left[\frac{R+LW}{R+LW+CZ_c}\right] - \cos^{-1}\left[\frac{R+LW}{R+LW+SW}\right]$

$X = \frac{A\,(R+LW+SW)}{57.3}$

③ ④ $A = \cos^{-1}\left[\frac{R}{R+CZ_c}\right] - \cos^{-1}\left[\frac{R}{R+LW+SW}\right]$

$X = \frac{A\,(R+LW+SW)}{57.3}$

NOTES:

1. GUARD RAILS COMPUTED IN ACCORDANCE WITH THE ABOVE EQUATIONS SHALL BE INSTALLED PARALLEL WITH THE CURVE OF THE ROADWAY. END TREATMENT SYSTEMS SHALL USE APPLICABLE OFFSETS WHEN REQUIRED.

2. LENGTH OF NEED (X) ON ONE WAY TRAFFIC SHALL USE THE EQUATION SHOWN FOR LOCATION ① & ②. WHEN A BRIDGE IS LOCATED IN A RADIUS> 2860 ft.; THE LENGTH OF NEED (X) SHALL BE COMPUTED AS STRAIGHT GUARD RAIL (USE X,Y,Z EQUATIONS ON SHEET 2 OF 10) WITH A FLARE RATE AS PER TABLE 4, SHEET 2 OF 10.

CZc : ADJUSTED CLEAR ZONE FOR HORIZONTAL CURVE, FT. SEE SHEET 2 OF 10.

R : RADIUS OF CURVE @ ℄ ROADWAY, FT

LW : LANE WIDTH, FT.

SW : SHOULDER WIDTH, FT.

X : LENGTH OF NEED, FT.

A : ANGLE AT CENTER FOR LENGTH OF NEED, DEGREE

STATE OF LOUISIANA
PAUL B. FOSSIER, JR
License No. 21028
PROFESSIONAL ENGINEER
IN
CIVIL ENGINEERING
7/8/15

FOR INFORMATIONAL PURPOSES ONLY

DESIGNED P. FOSSIER	CHECKED K. BRAUNER	DETAILED C. OWENS	CHECKED P. FOSSIER
SERIES NUMBER MARCH 2015	5 OF 10		

SHEET NUMBER | PARISH | CONTROL SECTION | STATE PROJECT

BY | DATE: 7-13-2015 | REVISION DESCRIPTION

APPROVED BY CHIEF ENGINEER: Lance P. Williams

HIGHWAY GUARD RAILS

GR-200

BRIDGE & STRUCTURAL DESIGN

08:02 8/6/2015 IP_PWP:d0591368\BD.1.1.1.0.05_raster.dgn

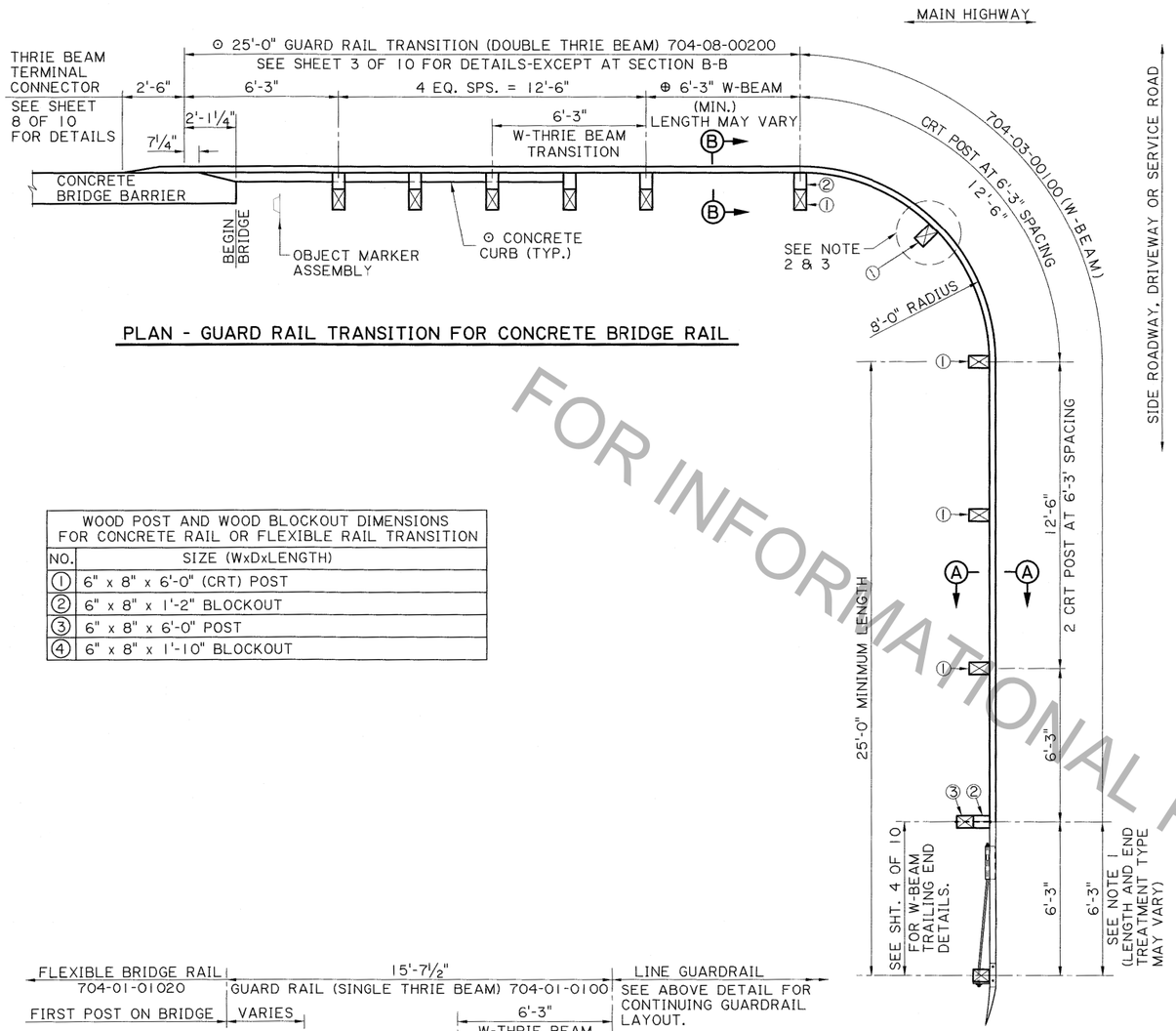

PLAN - GUARD RAIL TRANSITION FOR CONCRETE BRIDGE RAIL

WOOD POST AND WOOD BLOCKOUT DIMENSIONS FOR CONCRETE RAIL OR FLEXIBLE RAIL TRANSITION	
NO.	SIZE (WxDxLENGTH)
1	6" x 8" x 6'-0" (CRT) POST
2	6" x 8" x 1'-2" BLOCKOUT
3	6" x 8" x 6'-0" POST
4	6" x 8" x 1'-10" BLOCKOUT

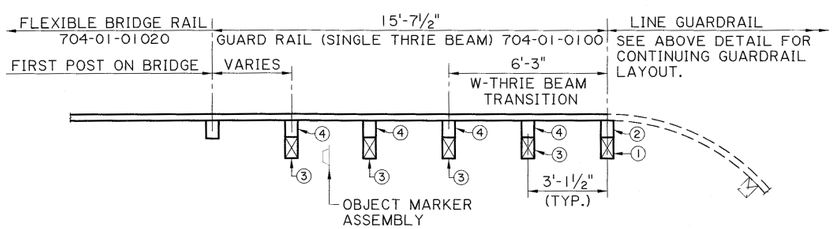

PLAN - GUARD RAIL TRANSITIONS FOR FLEXIBLE BRIDGE RAILS

NOTES:

1. THE USE OF THE W-BEAM TRAILING END SHALL BE LIMITED TO THE APPROACH ROADWAY SUCH AS RESIDENTIAL OR BUSINESS DRIVEWAYS OR OTHER SERVICE ROADWAYS. IF THE APPROACH ROADWAY CARRIES NORMAL HIGHWAY TRAFFIC, A CRASHWORTHY END TREATMENT, PAY ITEM 704-11-00100, 704-11-00200, OR 704-11-00300, SHALL BE USED IN LIEU OF THE W-BEAM TRAILING END.
2. THE CURVED GUARD RAIL SECTION SHALL BE SHOP BENT.
3. THE RAIL IS NOT BOLTED TO THE CRT POST AT THE CENTER OF THE NOSE AS SHOWN.
4. NO WASHERS ARE USED ON THE ⅝" ø BUTTON HEAD BOLTS CONNECTING THE RAIL TO THE CABLE RELEASE TERMINAL (CRT) POSTS.
5. BOLTS SHALL CONFORM TO THE REQUIREMENTS OF ASTM A 307 AND NUTS TO THE REQUIREMENTS OF ASTM A 563, GRADE A OR BETTER, AND BE GALVANIZED IN ACCORDANCE WITH ASTM A 153.
6. ALL ANGLES, CHANNELS AND PLATES SHALL CONFORM TO THE REQUIREMENTS OF ASTM A 36 AND STRUCTURAL TUBING TO ASTM A 500. WELDING SHALL MEET THE CURRENT REQUIREMENTS OF THE ANSI/AASHTO/AWS, BRIDGE WELDING CODE. ALL STRUCTURAL STEEL SHALL BE GALVANIZED IN ACCORDANCE WITH ASTM A 123. NO PUNCHING, DRILLING, CUTTING OR WELDING WILL BE PERMITTED AFTER GALVANIZING.
7. THE WOOD BREAKAWAY POST SHALL BE S4S TIMBER WITH A STRESS GRADE OF 1200 PSI AND SHALL BE GRADE MARKED OR CERTIFIED BY A RECOGNIZED ASSOCIATION OR AGENCY WHICH IS CERTIFIED BY THE BOARD OF REVIEW, AMERICAN LUMBER STANDARDS COMMITTEE, TO GRADE THE SPECIES. SEE SHEET 7 OF 10 FOR DETAILS.
8. FOR BOLT DETAILS, SEE SHEET NO. 9 OF 10.
9. WOOD POST AND BLOCKS SHALL BE TREATED IN ACCORDANCE WITH SECTION 1014 OF DOTD STD. SPECIFICATIONS.

⊙ 10. 13'-6" LONG CURB REQUIRED, SEE SHEET 3 OF 10 FOR DETAILS.

11. THE SLOPE IN FRONT OF THE INSTALLATION SHOULD NOT EXCEED 10H:1V.

12. TOP OF GUARD RAIL TO BE INSTALL 27" ABOVE GROUND LINE.

⊕ 13. LENGTH OF W-BEAM SECTION MAY INCREASE TO MEET SITE CONSTRAINTS FROM 6'-3" (MIN.)

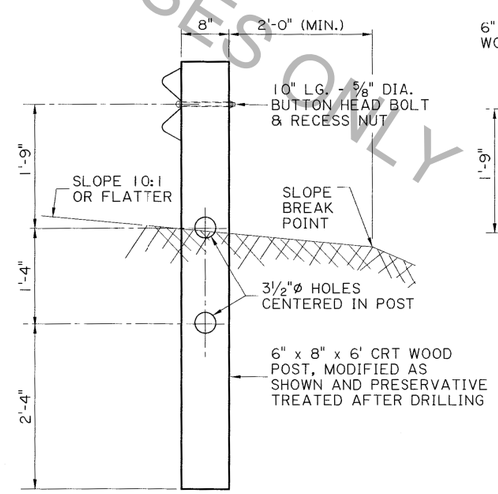

SECTION A - A
N.T.S.

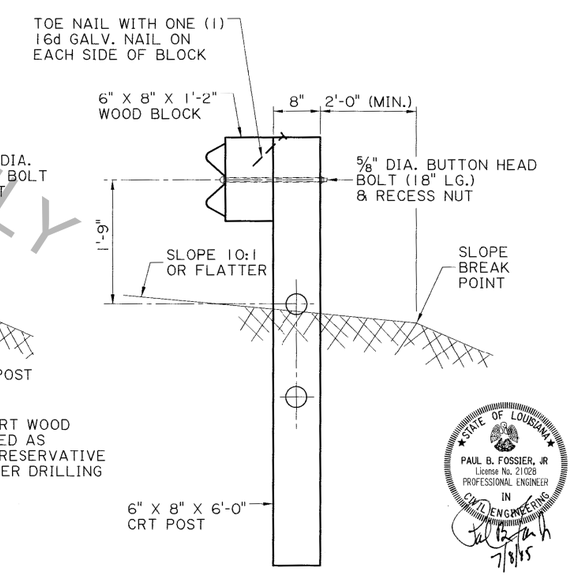

SECTION B-B
N.T.S.

STATE OF LOUISIANA
PAUL B. FOSSIER, JR
License No. 21028
PROFESSIONAL ENGINEER
IN
CIVIL ENGINEERING
7/8/15

FOR INFORMATIONAL PURPOSES ONLY

SHEET NUMBER	PARISH	CONTROL SECTION	STATE PROJECT

DESIGNED / CHECKED	DETAILED / CHECKED	SERIES NUMBER
P. FOSSIER / K. BRAUNER	C. OWENS / P. FOSSIER	MARCH 2015 / 6 OF 10

DATE	REVISION DESCRIPTION	BY
3-2-15	REVISED DETAIL	P.F.

APPROVED BY: CHIEF ENGINEER: James D Williams DATE: 7-13-2015

HIGHWAY GUARD RAILS
BRIDGE ENDS (T-INTERSECTION)

GR-200

BRIDGE & STRUCTURAL DESIGN

08:03 8/6/2015

IP_PWP:d0591368\BD.1.1.1.0.06_raster.dgn

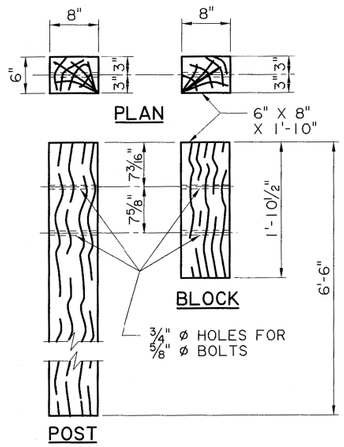

WOOD POST AND WOOD BLOCK FOR STANDARD THRIE BEAM GUARD RAIL

N.T.S.

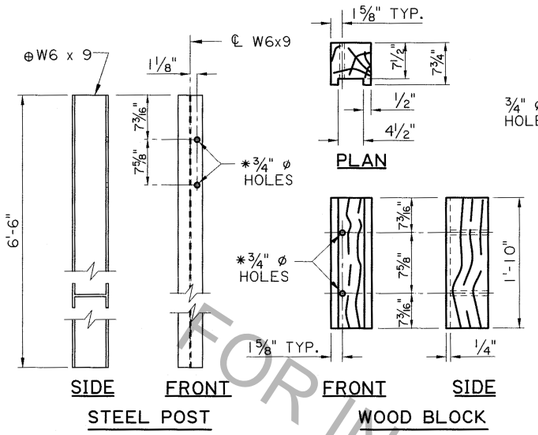

STEEL POST AND ROUTED WOOD BLOCK FOR STANDARD THRIE BEAM GUARD RAIL

N.T.S.

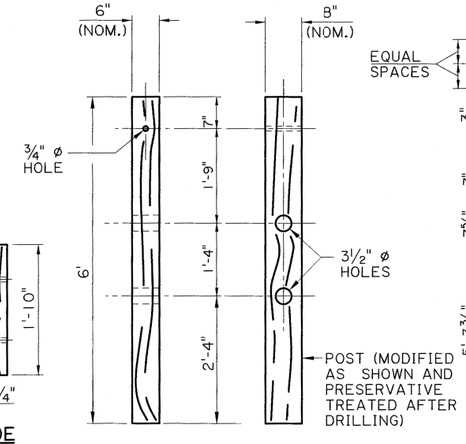

CONTROL RELEASING TERMINAL (CRT) WOOD POST

(USED AT T-INTERSECTION DETAILS, SEE SHT. 6 OF 10)

N.T.S.

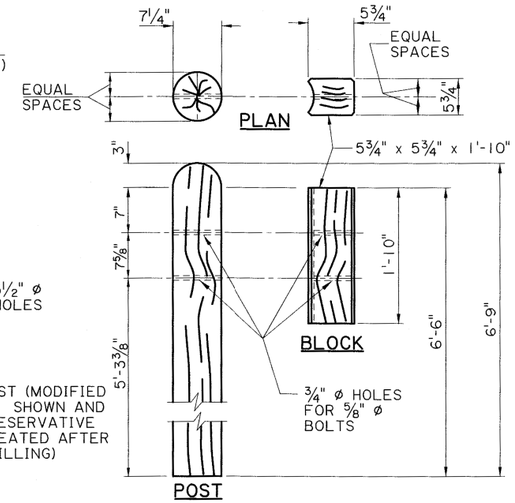

ROUND WOOD POST AND WOOD BLOCK FOR STANDARD THRIE BEAM GUARD RAIL

N.T.S.

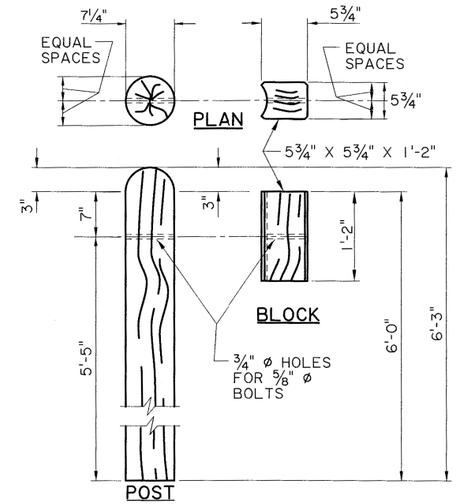

ROUND WOOD POST AND WOOD BLOCK FOR STANDARD W- BEAM GUARD RAIL

N.T.S.

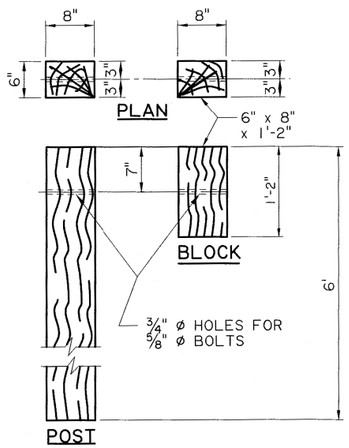

WOOD POST AND WOOD BLOCK FOR STANDARD W- BEAM GUARD RAIL

N.T.S.

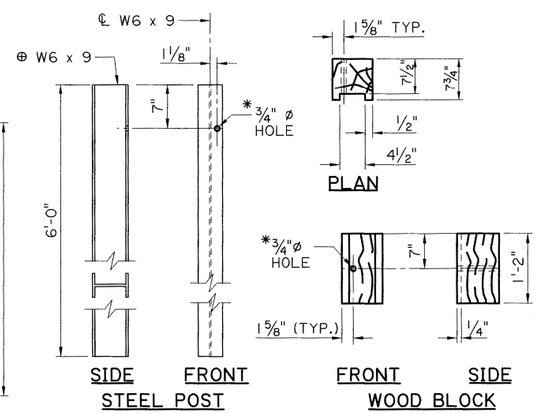

STEEL POST AND ROUTED WOOD BLOCK FOR STANDARD W- BEAM GUARD RAIL

N.T.S.

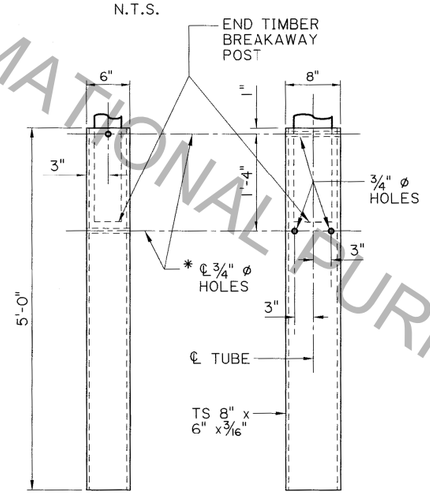

GALVANIZED STEEL TUBE

(FOR TRAILING END SECTION, SEE SHT. 4 OR 6 OF 10.)

N.T.S.

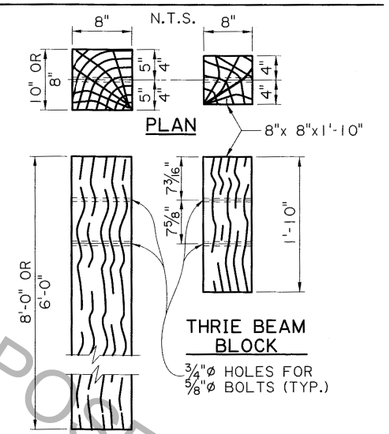

WOOD POST AND WOOD BLOCK FOR THRIE BEAM TRANSITION TO BRIDGE RAIL

(POST SIZE, BLOCK SIZE AND HOLE LOCATIONS VARIES WITH LOCATION IN TRANSITION, SEE SHT.3 OF 10)

N.T.S.

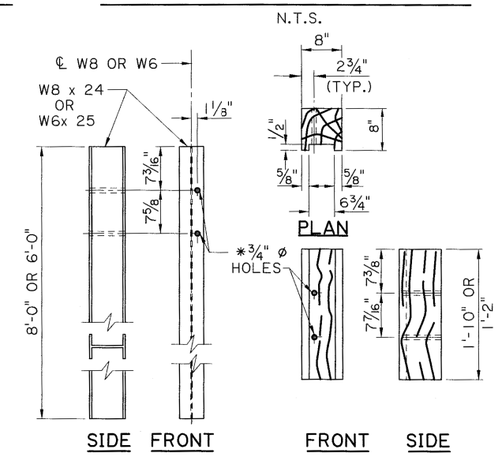

STEEL POST AND ROUTED WOOD BLOCK FOR THRIE BEAM TRANSITION TO BRIDGE RAIL

(POST SIZE, BLOCK SIZE AND HOLE LOCATIONS VARIES WITH LOCATION IN TRANSITION, SEE SHEET 3 OF 10)

N.T.S.

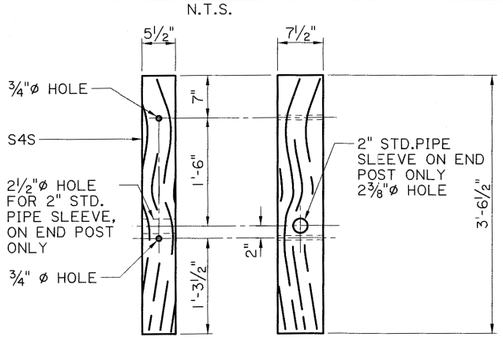

TIMBER BREAKAWAY POST

(FOR TRAILING END SECTION, SEE SHT. 4 & 6 OF 10.)

NOTES:

⊕ 1. THE ROUND WOOD POST AND WOOD BLOCK IS ALLOWED TO REPLACE THE 6" x 8" STANDARD LINE POST AND BLOCKOUT FOR W BEAM AND THRIE BEAM GUARD RAIL. THE ROUND WOOD POST SHALL NOT BE USED AS AN ALTERNATE FOR THE CRT POST, AND THE THRIE BEAM TRANSITION POST SECTION FOR THE CONCRETE BRIDGE RAIL.

2. A RECYCLED BLOCK ALTERNATE IS ALLOWED AS A SUBSTITITE FOR THE WOOD BLOCK ON A 1 FOR 1 BASIS AT NO ADDITIONAL PAYMENT. THE RECYCLED BLOCK MUST HAVE FHWA APPROVAL AND MEET NCHRP 350 OR MASH REQUIREMENTS.

⊕ 3. A W6x 8.5 STEEL POST MAY BE USED AS AN ALTERNATE FOR A W6 x 9 POST.

* 4. POST AND BLOCK HOLES SHALL BE DRILLED ADJACENT TO THE DIRECTION OF THE TRAFFIC.

STATE OF LOUISIANA
PAUL B. FOSSIER, JR
License No. 21026
PROFESSIONAL ENGINEER
IN
CIVIL ENGINEERING
7/8/15

FOR INFORMATIONAL PURPOSES ONLY

SHEET NUMBER	PARISH	CONTROL SECTION	STATE PROJECT

DESIGNED P.FOSSIER
CHECKED K.BRAUNER
DETAILED J. KOEMPEL
CHECKED P. FOSSIER
SERIES NUMBER MARCH 2015
7 OF 10

DATE	REVISION DESCRIPTION	BY
3-2-15	REVISE NOTES	P.F.

APPROVED BY CHIEF ENGINEER: Janice P. Williams
DATE: 7-13-2015

STATE OF LOUISIANA DEPARTMENT OF TRANSPORTATION AND DEVELOPMENT

HIGHWAY GUARD RAILS
GUARD RAIL POST AND BLOCK

GR-200

BRIDGE AND STRUCTURAL DESIGN

IP_PWP:d0591368\BD.1.1.1.0.07_raster.dgn

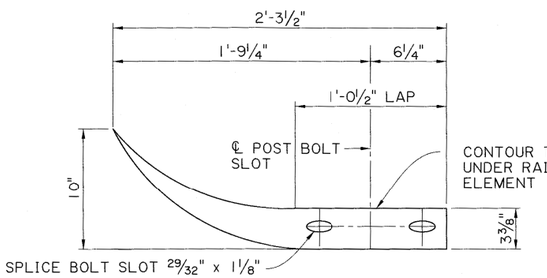

PLAN
N.T.S.

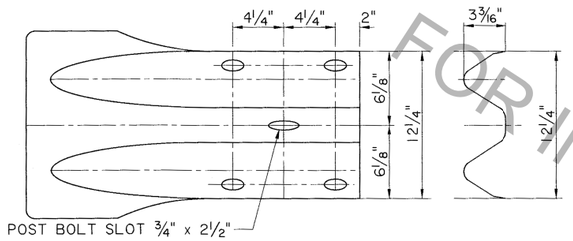

ELEVATION
N.T.S.

W BEAM END SECTION (FLARED)

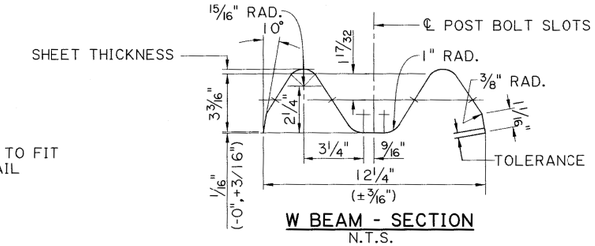

W BEAM - SECTION
N.T.S.

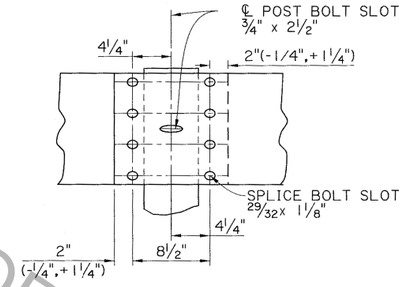

W-BEAM-SPLICE DETAIL-ELEVATION

⅝"Ø x 1¼" BUTTON HEAD OVAL SHOULDER BOLTS WITH ⅝" Ø RECESSED HEX NUTS-TOTAL 8 PER SPLICE AND 4 PER TERMINAL SECTION, LAP IN DIRECTION OF TRAFFIC.

W BEAM GUARD RAIL ELEMENT
N.T.S.

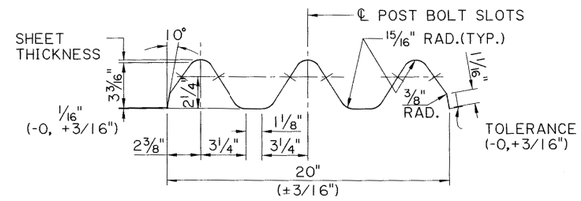

THRIE BEAM - SECTION
N.T.S.

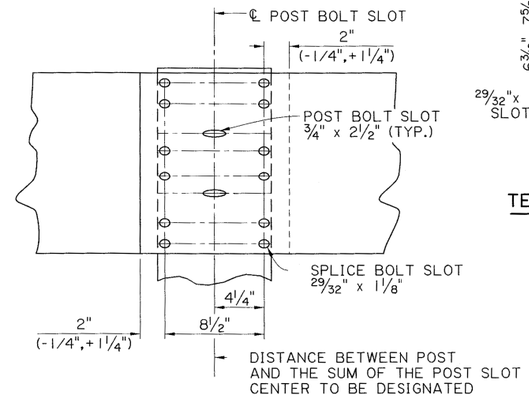

THRIE BEAM-SPLICE DETAIL-ELEVATION

⅝"Ø x 1¼" BUTTON HEAD OVAL SHOULDER BOLTS WITH ⅝" Ø RECESSED HEX NUTS-TOTAL 12 PER SPLICE AND 4 PER TERMINAL SECTION, LAP IN DIRECTION OF TRAFFIC.

THRIE BEAM GUARD RAIL ELEMENT
N.T.S.

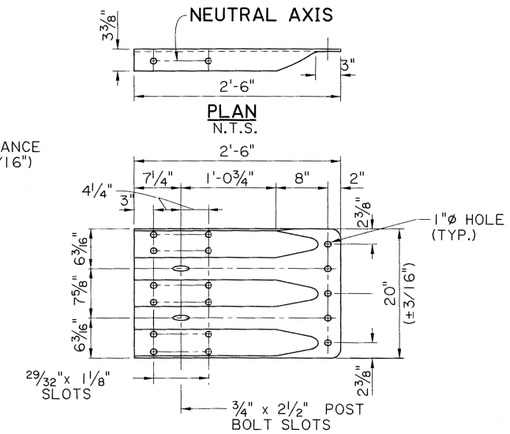

ELEVATION

TERMINAL CONNECTOR (THRIE BEAM)
N.T.S.

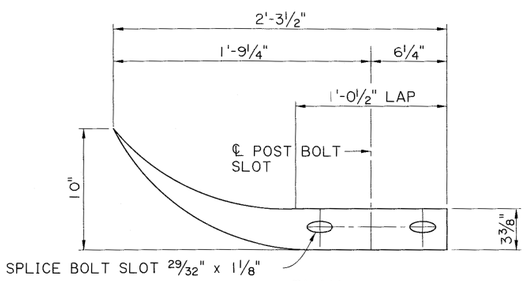

PLAN
N.T.S.

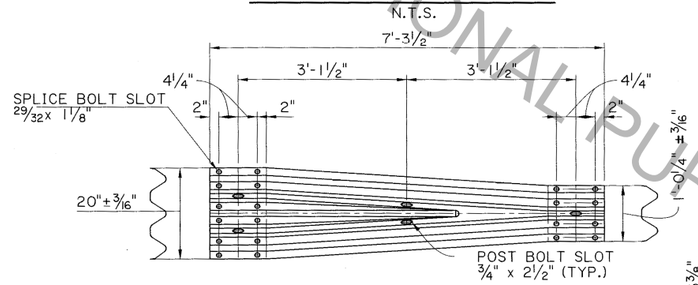

W/THRIE BEAM TRANSITION ELEVATION
N.T.S.

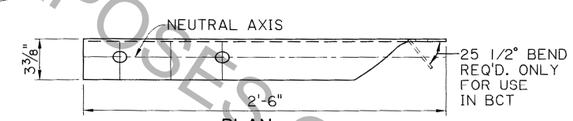

PLAN

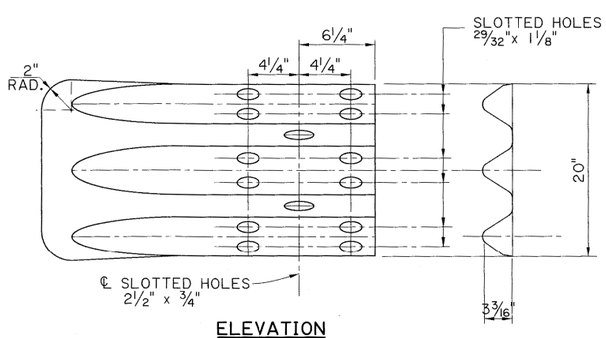

ELEVATION
N.T.S.

FLARED END SECTION FOR THRIE BEAM

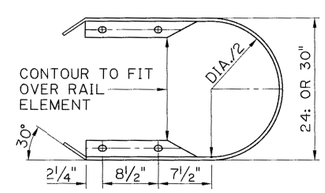

PLAN
N.T.S.

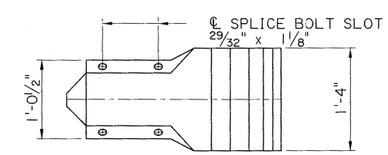

ELEVATION
N.T.S.

W-BEAM END SECTION BUFFER

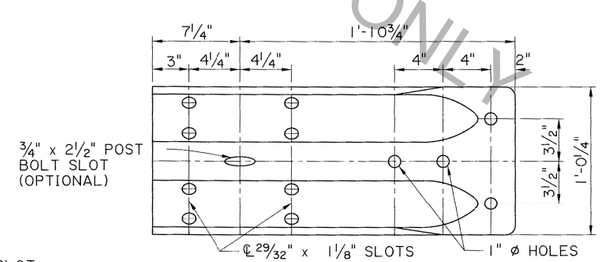

ELEVATION
N.T.S.

W BEAM TERMINAL CONNECTOR

NOTES:

1. ALL RAIL COMPONENTS EXCEPT THE W AND THRIE BEAM TERMINAL CONNECTORS SHALL MEET AASHTO M 180, CLASS "A" METAL THICKNESS WITH A TYPE II COATING. THE W BEAM AND THRIE BEAM TERMINAL CONNECTORS SHALL BE CLASS "B" METAL THICKNESS WITH TYPE II COATING.

STATE OF LOUISIANA
PAUL B. FOSSIER, JR
License No. 21028
PROFESSIONAL ENGINEER
IN
CIVIL ENGINEERING
7/8/15

FOR INFORMATIONAL PURPOSES ONLY

SHEET NUMBER	PARISH	CONTROL SECTION	STATE PROJECT

DESIGNED P. FOSSIER
CHECKED K. BRAUNER
DETAILED J. KOEMPEL
CHECKED P. FOSSIER
SERIES NUMBER MARCH 2015
8 OF 10

DATE	REVISION DESCRIPTION	BY

APPROVED BY CHIEF ENGINEER: Janice R Williams
DATE: 7-13-2015

HIGHWAY GUARD RAILS
RAIL STRUCTURAL DETAILS

GR-200

BRIDGE AND STRUCTURAL DESIGN

08:06
8/6/2015
IP_PWP:d0591368\BD.1.1.1.0.08_raster.dgn

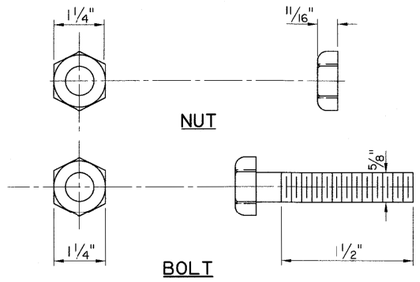

5/8" ø HEX BOLT & HEX NUT

(FOR FASTENING THE ANCHOR PLATE TO RAIL OR POST)
N.T.S.

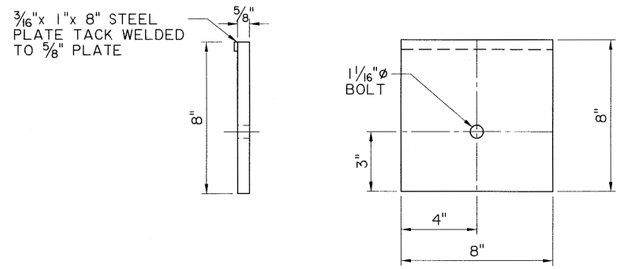

GALVANIZED STEEL BEARING PLATE

(FOR TRAILING END)
N.T.S.

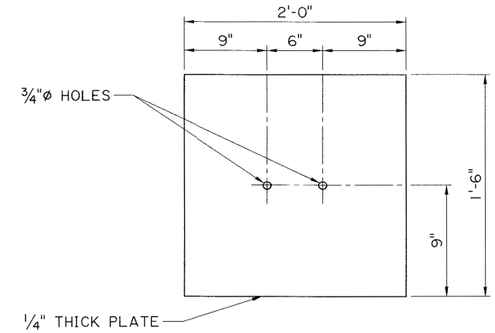

GALVANIZED SOIL PLATE

(FOR TRAILING END)
N.T.S.

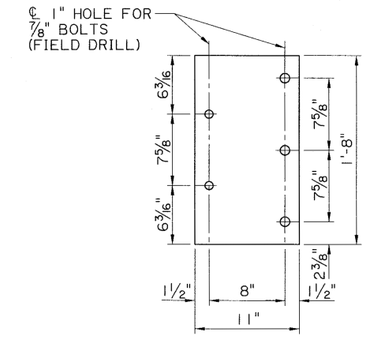

5/8" BEARING PLATE

(FOR ANCHORING THRIE BEAM TO CONCRETE BARRIER RAIL)
N.T.S.

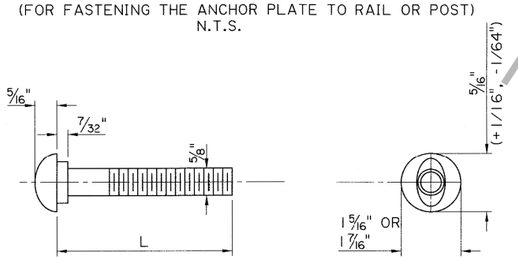

5/8" BUTTON HEAD BOLT

N.T.S.

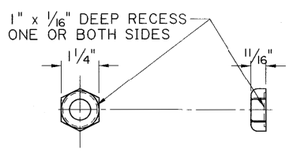

5/8"ø RECESS NUT

N.T.S.

5/8" BUTTON HEAD NUT	
L	THREAD LENGTH
1 1/4"	1 3/16"
2"	1 3/4"
10"	4"
1'-6"	4"
1'-8"	4"

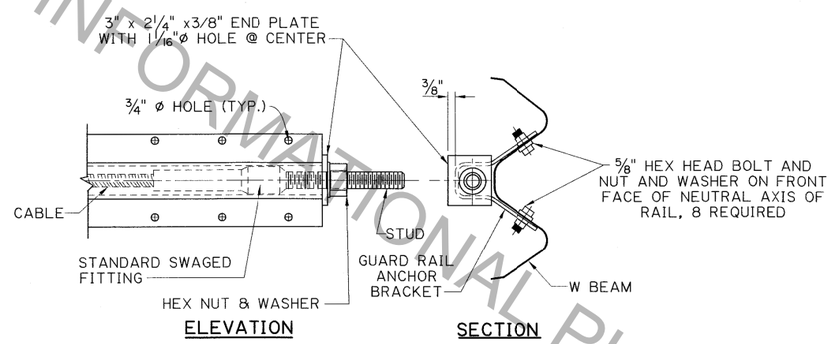

ELEVATION-BRACKET & FITTING

N.T.S.

ANCHOR PLATE ASSEMBLY DETAILS

(FOR TRAILING END

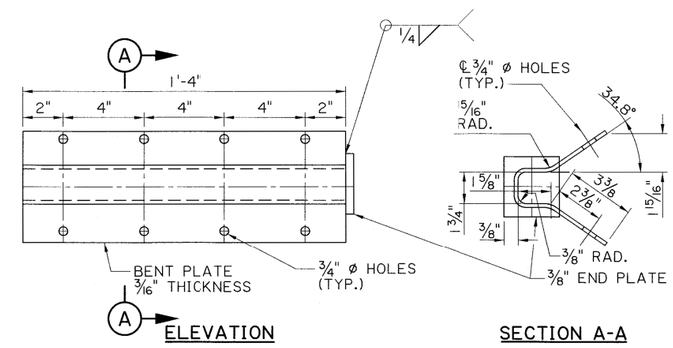

GUARD RAIL ANCHOR PLATE

N.T.S.

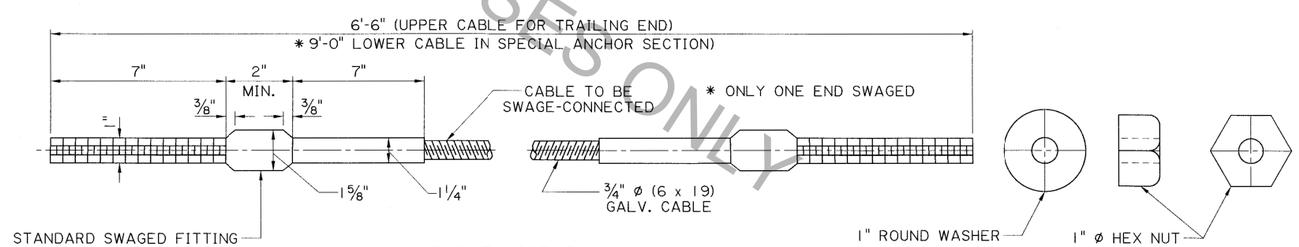

CABLE ASSEMBLY

(FOR TRAILING END)
N.T.S.

GUARD RAIL SPLICE, POST BOLT AND RECESS NUT

NOTES:
5/8" DIA. BUTTON HEAD BOLTS:

(1 1/4" LENGTH): THIS BOLT IS USED TO SPLICE RAIL ELEMENTS USED IN THE STANDARD CORRUGATED SHEET STEEL BEAM GUARD RAIL.
(2" LENGTH): THIS BOLT IS FOR FASTENING RAILS TO STEEL POSTS WHEN USED IN THE STANDARD CORRUGATED SHEET BEAM GUARD RAIL.
(10" LENGTH): THIS BOLT IS USED FOR FASTENING RAILS TO WOOD POST IN THE STANDARD CORRUGATED SHEET STEEL BEAM GUARD RAIL.
(1'-6" LENGTH): THIS BOLT IS FOR FASTENING WOOD BLOCKS & POSTS IN THE STANDARD CORRUGATED SHEET STEEL BEAM.
(1'-8" LENGTH): THIS BOLT IS FOR FASTENING NESTED THRIE BEAM TO WOOD BLOCKS AND POST AT THE FIRST TWO POST LOCATIONS AT THE ENDS OF RIDGID (CONCRETE) STRUCTURE, UNLESS OTHERWISE SHOWN IN THE PLANS.

5/8" ø BOLTS SHALL CONFORM TO THE REQUIREMENTS OF ASTM A 307 AND NUTS TO THE REQUIREMENTS IN ACCORDANCE WITH ASTM A 563 GRADE A OR BETTER. BOLTS AND NUTS SHALL BE GALVANIZED IN ACCORDANCE WITH ASTM A 153.

STEEL POST & PLATES:

ALL STEEL POSTS AND PLATES SHALL CONFORM TO ASTM A 36 AND SHALL BE GALVANIZED IN ACCORDANCE WITH ASTM 123, NO PUNCHING, DRILLING OR CUTTING WILL BE PERFORMED AFTER GALVANIZING.

STATE OF LOUISIANA
PAUL B. FOSSIER, JR
License No. 21028
PROFESSIONAL ENGINEER
IN
CIVIL ENGINEERING
7/8/15

FOR INFORMATIONAL PURPOSES ONLY

SHEET NUMBER	PARISH	CONTROL SECTION	STATE PROJECT

DESIGNED P. FOSSIER
CHECKED K. BRAUNER
DETAILED J. KOEMPEL
CHECKED P. FOSSIER
SERIES NUMBER MARCH 2015
9 OF 10

DATE	REVISION DESCRIPTION	BY
3-2-15	REVISED NOTES	P.F.

APPROVED BY CHIEF ENGINEER: DATE: 7-13-2015

HIGHWAY GUARD RAILS
STRUCTURAL DETAILS

GR-200

BRIDGE AND STRUCTURAL DESIGN

08:07
8/6/2015
IP_PWP:d0591368\BD.1.1.1.0.09_raster.dgn

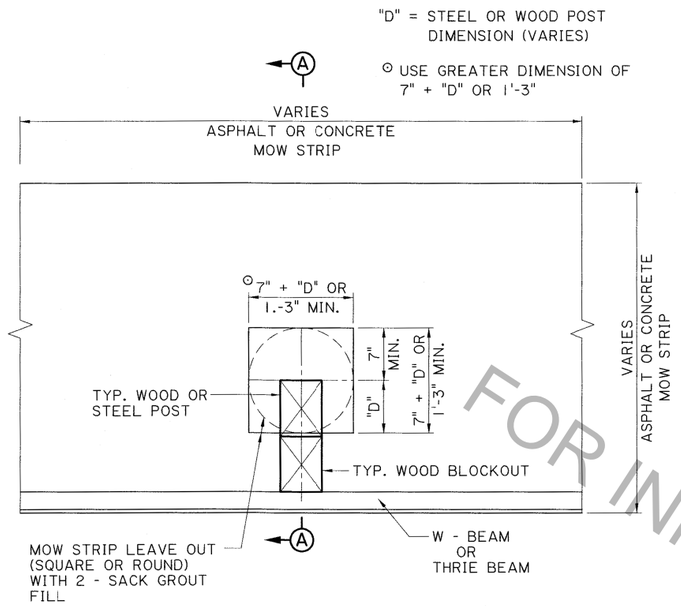

PLAN

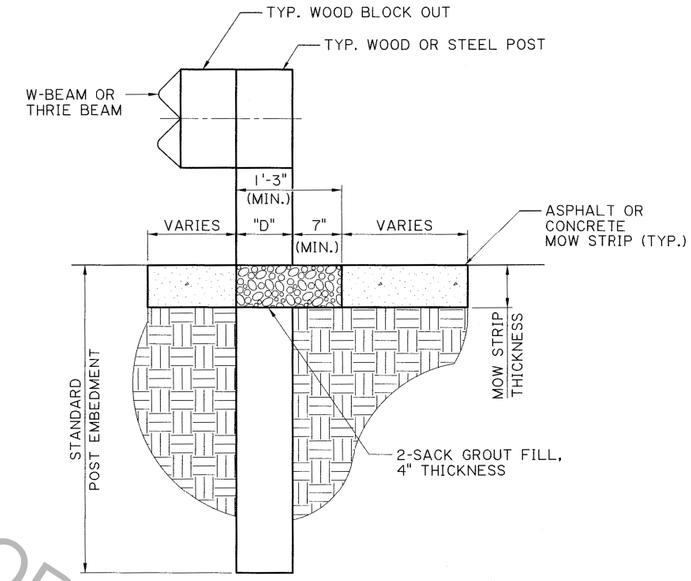

SECTION A-A

W-BEAM AND THRIE-BEAM GUARD RAIL INSTALLATIONS FOR CONCRETE OR ASPHALT PAVEMENT MOWING STRIPS

(FOR WOOD OR STEEL POSTS)

MOW STRIP NOTES:

1) ALL GUARDRAIL POSTS LOCATED WITHIN CONCRETE OR ASPHALT MOW STRIPS SHALL MEET INSTALLATION REQUIREMENTS SHOWN ON THIS SHEET.

2) USE A 2-SACK NON-SHRINK GROUT FILL WITH A MAXIMUM COMPRESSIVE STRENGTH OF 120 PSI

3) ALL LABOR AND MATERIALS TO PLACE 2-SACK GROUT FILL (4" THICKNESS) SHALL BE INCLUDED IN PAYMENT FOR CONCRETE OR ASPHALT PAVING PAY ITEMS.

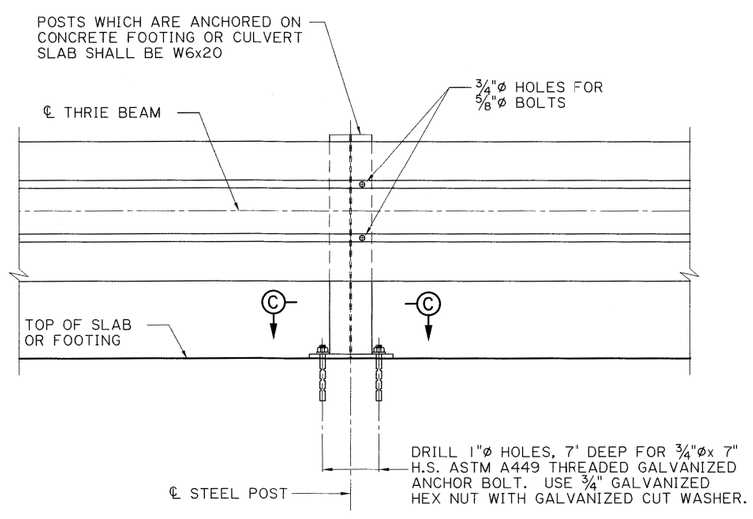

STEEL POST ATTACHED TO CONCRETE

SPECIAL POST WITH BASE PLATE TO BE USED WHEN REQUIRED EMBEDMENT OF CONVENTIONAL POST IN SOIL CANNOT BE OBTAINED.

W6 X 20 STEEL POST TO USE 8" X 8" WOOD BLOCK AS SHOWN ON SHT. 7 OF 10 ON DETAIL FOR STEEL POST AND ROUTED WOOD BLOCK FOR THRIE BEAM TRANSITION TO BRIDGE RAIL DETAIL.

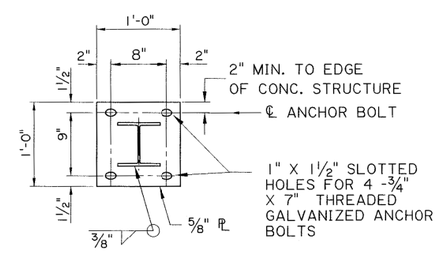

SECTION C-C - GALVANIZED STEEL BASE PLATE

ANCHOR BOLT INSTALLATION

ALL HOLES (VERTICAL OR HORIZONTAL) DRILLED INTO AN EXISTING CONCRETE STRUCTURE SHALL BE CLEANED WITH COMPRESSED AIR AND MAKE THEM FREE OF ANY OIL OR RESIDUE. HOLES SHALL BE FILLED WITH EPOXY INJECTION SYSTEM AS LISTED ON QPL 40. PLACE ANCHOR BOLT IN HOLE IMMEDIATELY AND WAIT FOR THE MANUFACTURERS CURE TIME.

STATE OF LOUISIANA
PAUL B. FOSSIER, JR
License No. 21028
PROFESSIONAL ENGINEER
IN
CIVIL ENGINEERING
7/13/15

FOR INFORMATIONAL PURPOSES ONLY

SHEET NUMBER			
PARISH	CONTROL SECTION	STATE PROJECT	
DESIGNED P. FOSSIER / CHECKED K. BRAUNER	DETAILED C. OWENS / CHECKED P. FOSSIER	SERIES NUMBER MARCH 2015	10 OF 10

DATE	REVISION DESCRIPTION	BY

APPROVED BY CHIEF ENGINEER: Jamie P. Willis DATE: 7-13-2015

HIGHWAY GUARD RAILS
MISCELLANEOUS DETAILS

GR-200

BRIDGE AND STRUCTURAL DESIGN

08:08
8/6/2015
IP_PWP:d0591368\BD.1.1.1.0.10_raster.dgn