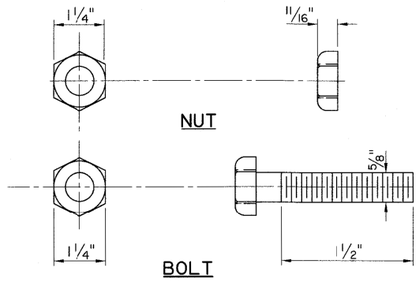

5/8" ø HEX BOLT & HEX NUT

(FOR FASTENING THE ANCHOR PLATE TO RAIL OR POST)
N.T.S.

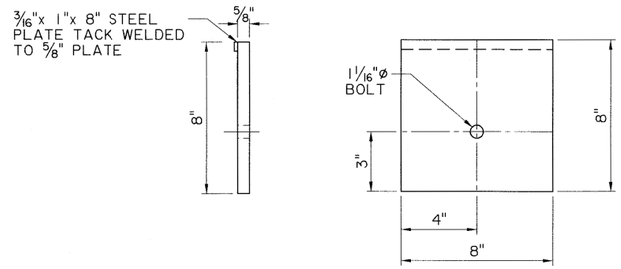

GALVANIZED STEEL BEARING PLATE

(FOR TRAILING END)
N.T.S.

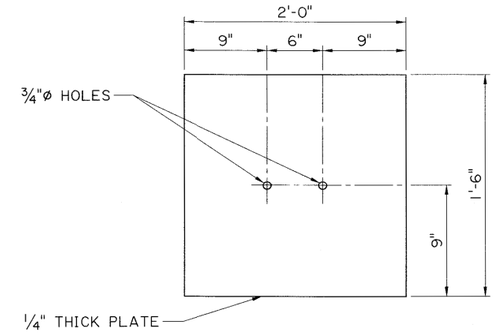

GALVANIZED SOIL PLATE

(FOR TRAILING END)
N.T.S.

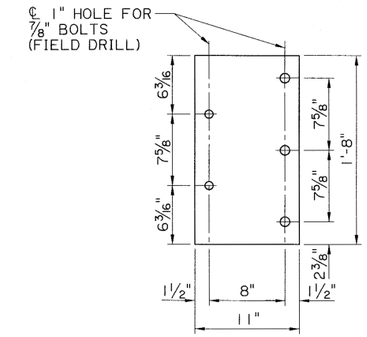

5/8" BEARING PLATE

(FOR ANCHORING THRIE BEAM TO CONCRETE BARRIER RAIL)
N.T.S.

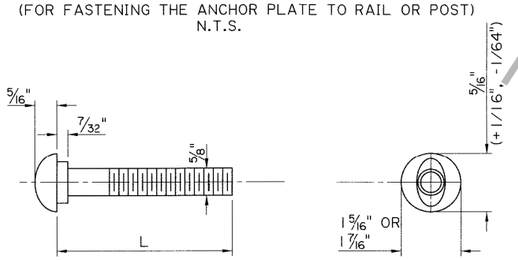

5/8" BUTTON HEAD BOLT

N.T.S.

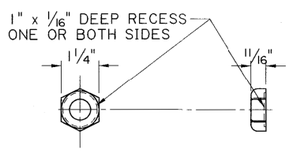

5/8"ø RECESS NUT

N.T.S.

5/8" BUTTON HEAD NUT	
L	THREAD LENGTH
1 1/4"	1 3/16"
2"	1 3/4"
10"	4"
1'-6"	4"
1'-8"	4"

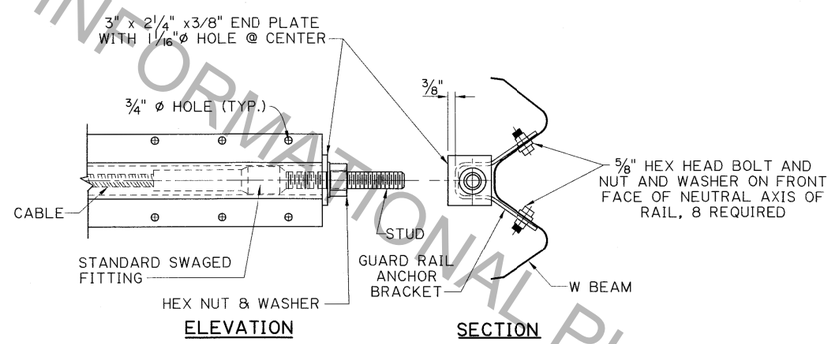

ELEVATION-BRACKET & FITTING

N.T.S.

ANCHOR PLATE ASSEMBLY DETAILS

(FOR TRAILING END

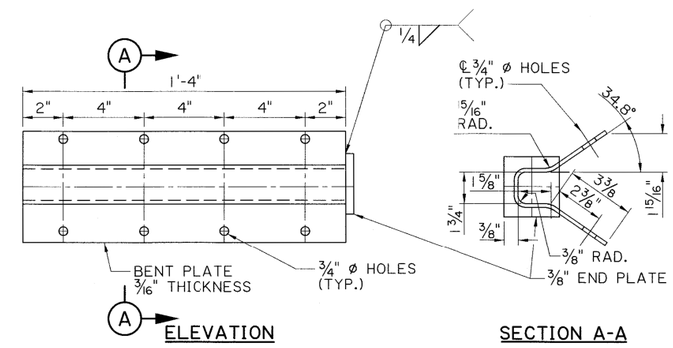

GUARD RAIL ANCHOR PLATE

N.T.S.

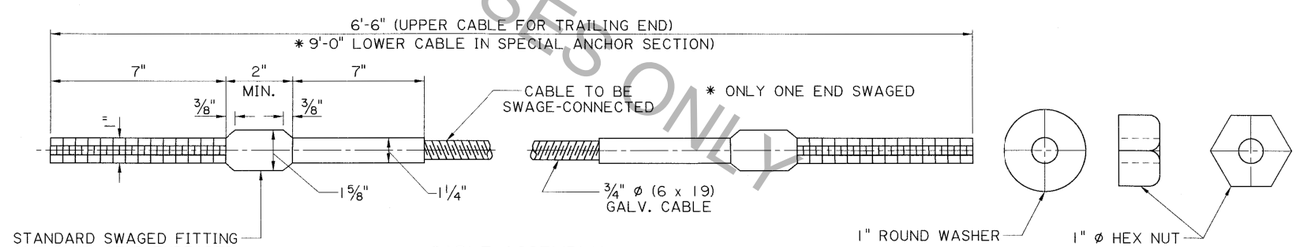

CABLE ASSEMBLY

(FOR TRAILING END)
N.T.S.

GUARD RAIL SPLICE, POST BOLT AND RECESS NUT

NOTES:
5/8" DIA. BUTTON HEAD BOLTS:

(1 1/4" LENGTH): THIS BOLT IS USED TO SPLICE RAIL ELEMENTS USED IN THE STANDARD CORRUGATED SHEET STEEL BEAM GUARD RAIL.
(2" LENGTH): THIS BOLT IS FOR FASTENING RAILS TO STEEL POSTS WHEN USED IN THE STANDARD CORRUGATED SHEET BEAM GUARD RAIL.
(10" LENGTH): THIS BOLT IS USED FOR FASTENING RAILS TO WOOD POST IN THE STANDARD CORRUGATED SHEET STEEL BEAM GUARD RAIL.
(1'-6" LENGTH): THIS BOLT IS FOR FASTENING WOOD BLOCKS & POSTS IN THE STANDARD CORRUGATED SHEET STEEL BEAM.
(1'-8" LENGTH): THIS BOLT IS FOR FASTENING NESTED THRIE BEAM TO WOOD BLOCKS AND POST AT THE FIRST TWO POST LOCATIONS AT THE ENDS OF RIDGID (CONCRETE) STRUCTURE, UNLESS OTHERWISE SHOWN IN THE PLANS.

5/8" ø BOLTS SHALL CONFORM TO THE REQUIREMENTS OF ASTM A 307 AND NUTS TO THE REQUIREMENTS IN ACCORDANCE WITH ASTM A 563 GRADE A OR BETTER. BOLTS AND NUTS SHALL BE GALVANIZED IN ACCORDANCE WITH ASTM A 153.

STEEL POST & PLATES:

ALL STEEL POSTS AND PLATES SHALL CONFORM TO ASTM A 36 AND SHALL BE GALVANIZED IN ACCORDANCE WITH ASTM 123, NO PUNCHING, DRILLING OR CUTTING WILL BE PERFORMED AFTER GALVANIZING.

STATE OF LOUISIANA
PAUL B. FOSSIER, JR
License No. 21028
PROFESSIONAL ENGINEER
IN
CIVIL ENGINEERING
7/8/15

FOR INFORMATIONAL PURPOSES ONLY

SHEET NUMBER	PARISH	CONTROL SECTION	STATE PROJECT

DESIGNED P. FOSSIER
CHECKED K. BRAUNER
DETAILED J. KOEMPEL
CHECKED P. FOSSIER
SERIES NUMBER MARCH 2015
9 OF 10

DATE	REVISION DESCRIPTION	BY
3-2-15	REVISED NOTES	P.F.

APPROVED BY CHIEF ENGINEER: DATE: 7-13-2015

HIGHWAY GUARD RAILS
STRUCTURAL DETAILS

GR-200

BRIDGE AND STRUCTURAL DESIGN

08:07
8/6/2015
IP_PWP:d0591368\BD.1.1.1.0.09_raster.dgn