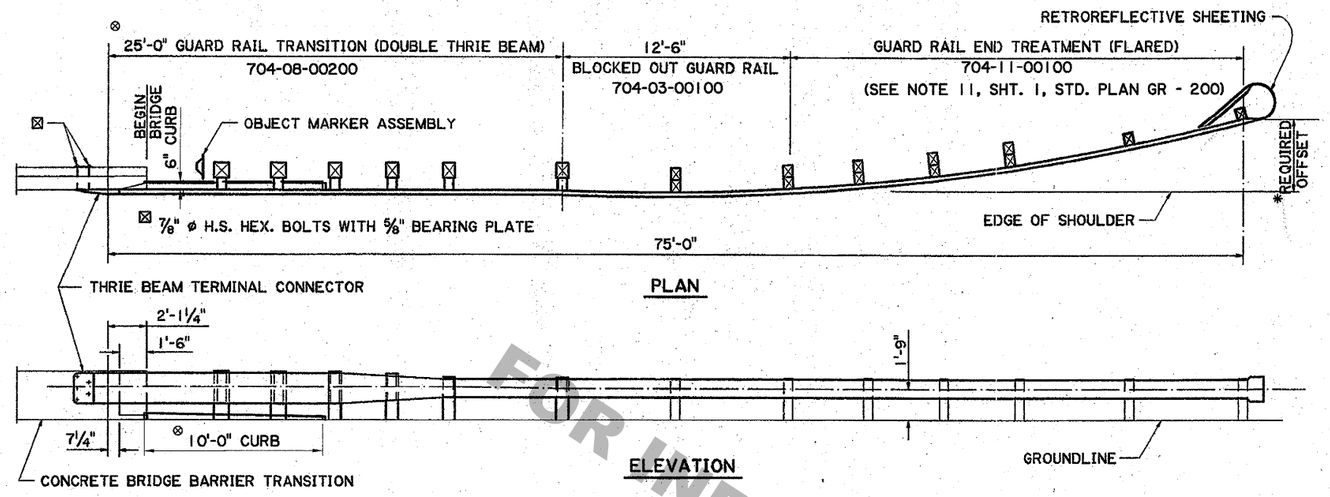

RL-3 LAYOUT

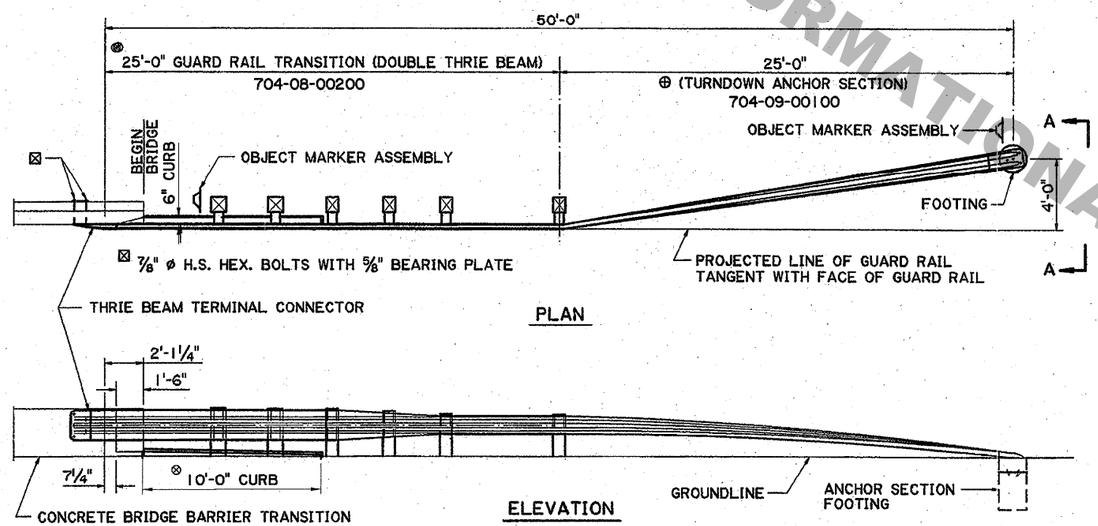

RL-1, RL-2, UL-1 & UL-2 LAYOUT

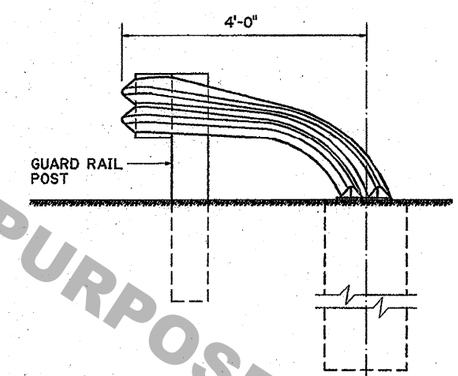

VIEW A-A

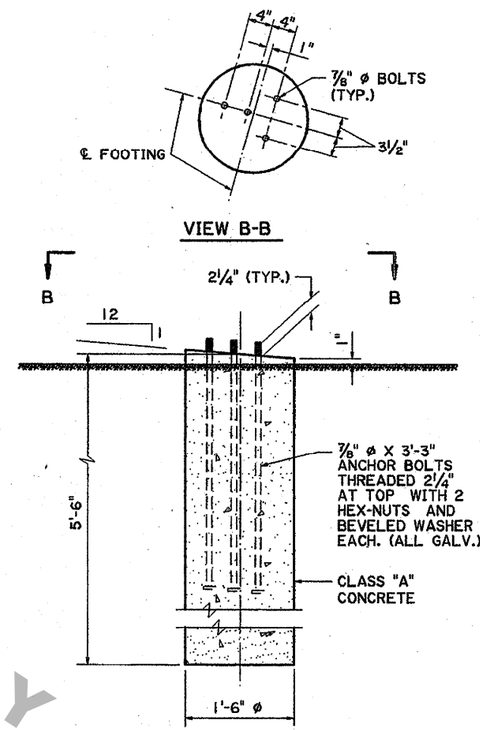

ANCHOR SECTION FOOTING

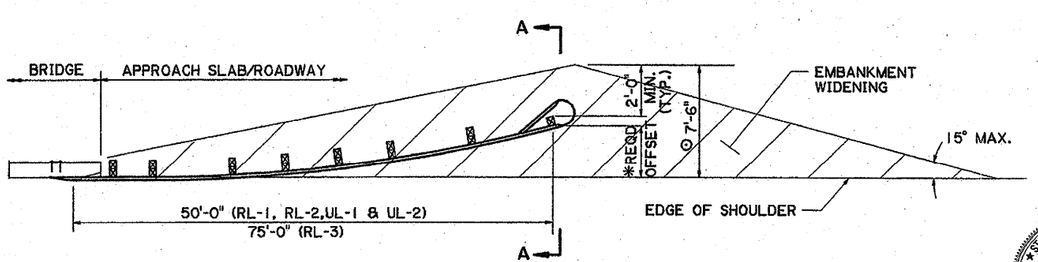

TYPICAL PLAN FOR EMBANKMENT WIDENING

(TYPICAL FOR EACH END OF BRIDGE)

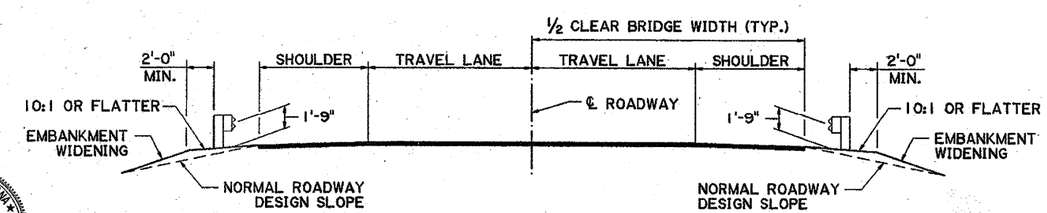

TYPICAL CROSS SECTION A-A AT EMBANKMENT WIDENING

NOTES:

1) FOR ADDITIONAL GUARD RAIL DETAILS AND INFORMATION, SEE STANDARD PLAN GR-200.
2) FOR CONCRETE BRIDGE BARRIER TRANSITION DETAILS, SEE BRIDGE PLANS.
3) THE GUARD RAIL, TRANSITION SHALL BE PAID FOR UNDER ITEM 704-08-00200. AND THE TURNDOWN ANCHOR SECTION (INCLUDING THE FOOTING) SHALL BE PAID FOR UNDER ITEM 704-09-00100.

   OBJECT MARKERS (TYPE 3) SHALL BE PAID FOR UNDER ITEM 729-16-00300.

   THE QUANTITY FOR THE EMBANKMENT WIDENING AT BRIDGE ENDS SHALL BE INCLUDED IN THE EMBANKMENT QUANTITY FOR THE ROADWAY.

⊕ 4) TURNDOWN GUARD RAIL SECTION CONSISTS OF RAIL SECTION(S) TWISTED THROUGH 90°. A SPLICE IS PERMITTED AT CONTRACTORS OPTION.

* 5) USE REQUIRED OFFSET AS PER GUARD RAIL END TREATMENT SPECIAL PROVISIONS

⊙ 6) EMBANKMENT WIDENING WIDTH BASED ON 4' GUARD RAIL END TREATMENT OFFSET.

⊗ 7) 10'-0" LONG CURB REQUIRED SEE SHT. 3, GR-200 STD. PLAN FOR DETAILS.

FOR INFORMATIONAL PURPOSES ONLY

STATE OF LOUISIANA
PAUL B. FOSSIER, JR.
REG. No. 21028
REGISTERED PROFESSIONAL ENGINEER IN CIVIL ENGINEERING
11-10-08

SHEET NUMBER

PARISH | FEDERAL PROJECT | STATE PROJECT

DESIGNED | CHECKED | DETAILED J. BENTON | CHECKED P. FOSSIER | DATE OCT. 2008 | SHEET 1 OF 1

REVISION DESCRIPTION | BY | APPROVED | DATE

APPROVED BY CHIEF ENGINEER | DATE: 1-26-09

STATE OF LOUISIANA

OFF-SYSTEM HIGHWAY GUARD RAIL
RL-1, RL-2, RL-3, UL-1, & UL-2
CLASS HIGHWAY
STANDARD LENGTH

STANDARD PLAN | GR-203 A

BRIDGE AND STRUCTURAL DESIGN