CHECK PRINTS
R:\Gang031\Users\d2475\standard plans in dgn format\Revised Standard Plans\MB01-2.dgn
13-FEB-2009 14:26

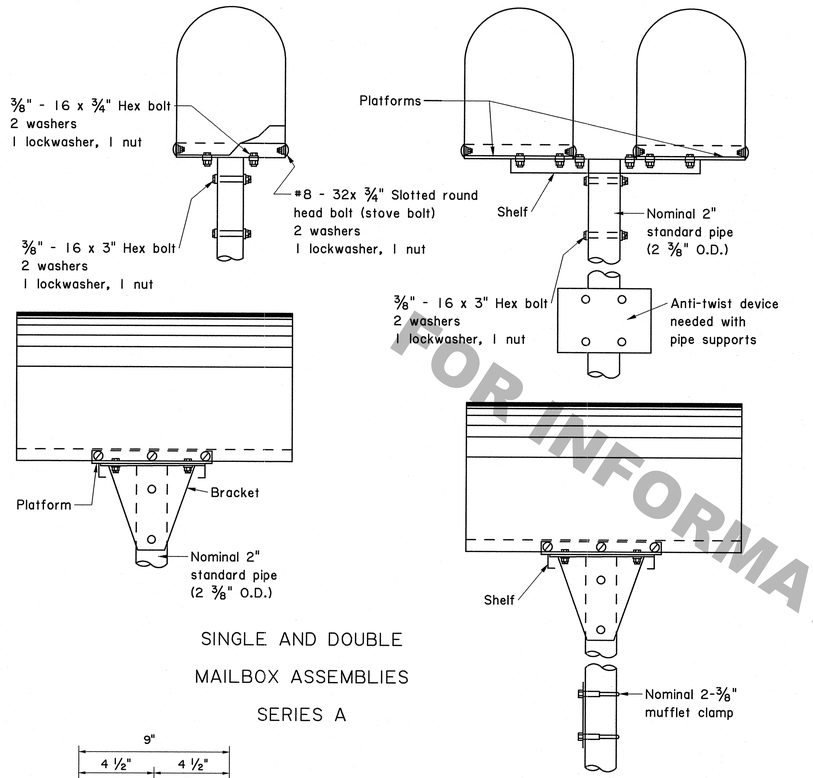

SINGLE AND DOUBLE MAILBOX ASSEMBLIES SERIES A

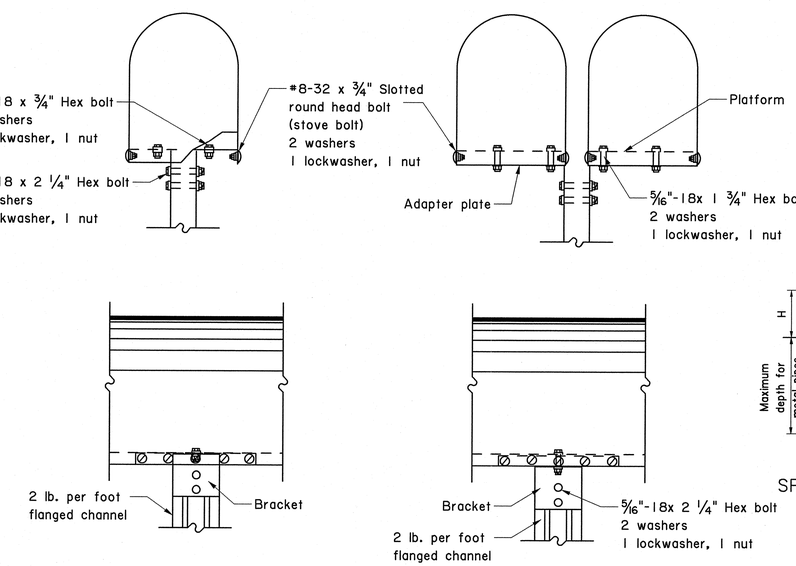

SINGLE AND DOUBLE MAILBOX ASSEMBLIES SERIES B

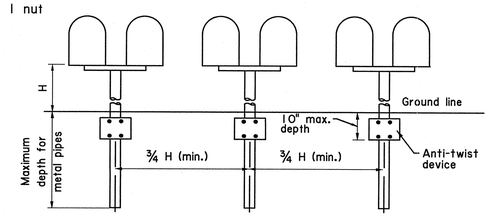

SPACING FOR MULTIPLE POST INSTALLATION SERIES A

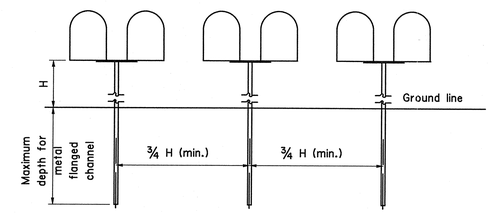

SPACING FOR MULTIPLE POST INSTALLATION SERIES B

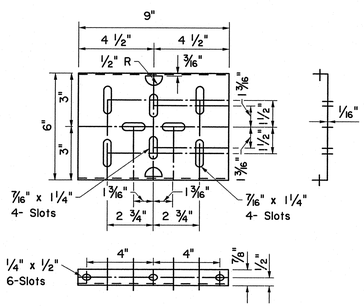

PLATFORM

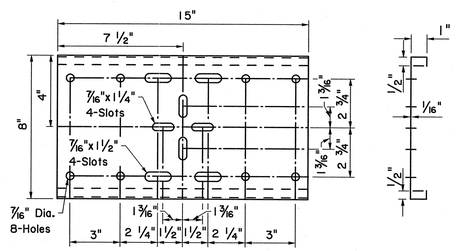

SHELF

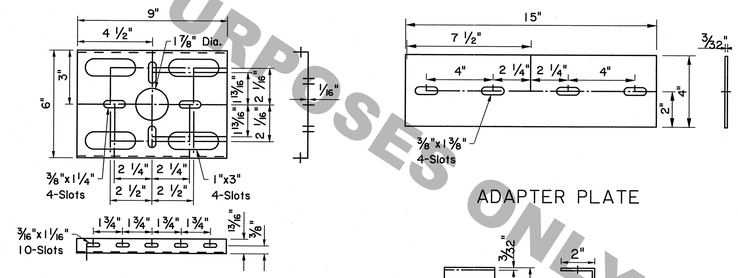

PLATFORM

ADAPTER PLATE

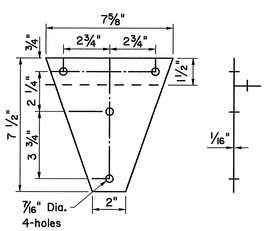

BRACKET

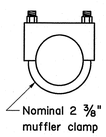

CLAMP

MAILBOX SUPPORT HARDWARE SERIES A

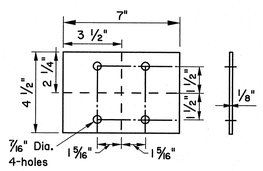

ANTI-TWIST DEVICE

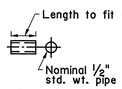

SPACER

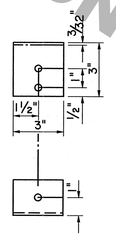

BRACKET

MAILBOX SUPPORT HARDWARE SERIES B

FOR INFORMATIONAL PURPOSES ONLY

SHEET NUMBER	PARISH	FEDERAL PROJECT	STATE PROJECT

DESIGNED J.Lacombe
CHECKED C.Winchester
DETAILED J.Lacombe
CHECKED C.Winchester
DATE: 01/07/09
SHEET: 2 OF 2

NO.	DATE	REVISION DESCRIPTION	BY

APPROVED BY CHIEF ENGINEER — DATE 2-18-09

STATE OF LOUISIANA DEPARTMENT OF TRANSPORTATION AND DEVELOPMENT

MAILBOX INSTALLATION DETAILS

STANDARD PLAN MB-01

DOTD DEPARTMENT OF TRANSPORTATION AND DEVELOPMENT

ROAD DESIGN