LOUISIANA

STANDARD SPECIFICATIONS
FOR
ROADS AND BRIDGES

LOUISIANA DEPARTMENT OF
TRANSPORTATION & DEVELOPMENT

2016

EDITION

STATE OF LOUISIANA
DEPARTMENT OF TRANSPORTATION
AND DEVELOPMENT

FOREWORD

This 2016 edition of the Louisiana Standard Specifications for Roads and Bridges is hereby approved for use on construction contracts awarded by the Louisiana Department of Transportation and Development and other governing bodies. These standard specifications are subject to amendment whenever necessary by supplemental specifications or by special provisions applicable to specific contracts.

A new subsection numbering system is introduced based on a decimal format. This specifications book also uses the active voice, imperative mood when describing the contractor's responsibility.

Numerous changes have been made from the previous edition of the standard specifications. Many parts of the specifications including the general provisions, asphalt pavements, portland cement concrete, structures, and materials have been reorganized and/or significantly rewritten. Users of previous versions of these standard specifications are advised that this has resulted in the movement of some topics from their previous locations to more appropriate locations in the new specifications or perhaps their entire deletion if no longer considered necessary by the Department.

Use of these standard specifications by any organization or individual will be at the user's risk. Organizations or individuals citing these standard specifications by reference in their contract work will be responsible for furnishing prospective bidders copies of the specifications along with any amendments that may affect their contract.

JANICE P. WILLIAMS, P.E.
CHIEF ENGINEER

Table of Contents

Section No. **Page No.**

PART I — GENERAL PROVISIONS

101 General Information, Definitions and Terms 2
102 Bidding Requirements..... 18
103 Award and Execution of Contract 28
104 Scope of Work..... 32
105 Control of Work 41
106 Control of Materials..... 61
107 Legal Relations and Responsibility to Public..... 67
108 Prosecution and Progress 88
109 Measurement and Payment..... 101

PART II — EARTHWORK

201 Clearing and Grubbing 114
202 Removing or Relocating Structures and Obstructions 116
203 Excavation and Embankment 129
204 Temporary Erosion Control..... 144

PART III — BASE COURSES

301 Class I Base Course..... 151
302 Class II Base Course 168
303 In-Place Cement Stabilized and Treated Base Courses..... 181
304 Lime Treatment..... 192
305 Subgrade Layer 199
306 Scarifying and Compacting Roadbed 204
307 Permeable Bases 206
308 Vacant..... 210
309 In-Place Cement Treated Subgrade 211

PART IV —SURFACE COURSES

401 Aggregate Surface Course..... 215
402 Traffic Maintenance Surfacing..... 219

PART V — ASPHALT PAVEMENTS

501 Thin Asphalt Concrete Applications 223
502 Asphalt Concrete Mixtures 234
503 Asphalt Concrete Equipment and Processes 270

Section No. **Page No.**

504 Asphalt Tack Coat 283
505 Asphalt Prime Coat 285
506 Asphalt Curing Membrane 287
507 Asphalt Surface Treatment 289
508 Vacant 298
509 Milling Asphalt Pavement 299
510 Asphalt Concrete Pavement Patching, Widening and Joint Repair 302

PART VI — RIGID PAVEMENT

601 Portland Cement Concrete Pavement 306
602 Portland Cement Concrete Pavement Rehabilitation 327

PART VII — INCIDENTAL CONSTRUCTION

701 Culverts and Storm Drains 349
702 Manholes, Junction Boxes, Catch Basins, and End Treatments 362
703 Underdrain Systems 366
704 Guard Rail 371
705 Fences 374
706 Concrete Walks, Drives and Incidental Paving 378
707 Curbs and Gutters 381
708 Right-of-Way Monuments 385
709 Steel Cattle Guards 387
710 Flowable Fill 389
711 Riprap 392
712 Revetments 396
713 Temporary Traffic Control 400
714 Sodding 420
715 Topsoil 423
716 Vegetative and Fiber Mulch 425
717 Seeding 428
718 Fertilizer and Agricultural Lime 432
719 Landscaping 434
720 Erosion Control Systems 445
721 Mowing, Trimming and Debris Collection 447
722 Field Laboratories 451
723 Granular Material 453
724 Rumble Strips 455
725 Temporary Detour Roads 457

Section No. **Page No.**

726 Bedding Material 459
727 Mobilization 461
728 Jacked or Bored Pipe 463
729 Traffic Signs 466
730 Vacant 476
731 Raised Pavement Markers 477
732 Plastic Pavement Markings 480
733 Vacant 487
734 Rubblizing Portland Cement Concrete Pavement 488
735 Mailboxes and Mailbox Supports 494
736 Traffic Signals 496
737 Painted Traffic Striping 515
738 Mulch Sodding 520
739 Hydro-Seeding 522
740 Construction Layout 524
741 Water Distribution Systems (Supplemental Specifications) 527
742 Sanitary Sewer Systems (Supplemental Specifications) 528
743 Airport Pavement Markings (Supplemental Specifications) 529
744 Traffic Control Devices 530

PART VIII—STRUCTURES

801 General Requirements for Structures 532
802 Structural Excavation, Backfill, and Earth Retaining Systems 538
803 Drilled Shafts 558
804 Piles 591
805 Structural Concrete 617
806 Deformed Reinforcing Steel 641
807 Structural Metals 647
808 Steel Grid Flooring 679
809 Welding 682
810 Bridge Railings, Hand Railings, Permanent Roadway Barriers, and Pier Protection Systems 684
811 Painting and Protective Coatings 687
812 Treated Timber 723
813 Concrete Approach Slabs 728
814 Bearings 731
815 Joints 737
816 Bridge Drainage Systems 743

Section No. **Page No.**

817 Temporary Works 746
818 Marine Pier Protection 755
819 Reserved 765
820 Movable Bridges 766
821 Mechanical Systems 794
822 Electrical Systems 867
823 Facilities 879
824 Reserved 896
825 Reserved 897
826 Reserved 898
827 Reserved 899
828 Reserved 900
829 Instrumentation and Evaluation 901
830 Repair and Rehabilitation 904

PART IX — PORTLAND CEMENT CONCRETE

901 Portland Cement Concrete 911

PART X — MATERIALS

1001 Portland Cement and Cementitious Materials 933
1002 Asphalt Cement, Emulsions and Additives 935
1003 Aggregates 947
1004 Landscaping Materials 964
1005 Joint Materials for Pavements and Structures 968
1006 Thermoplastic Pipe 976
1007 Metal Pipe 978
1008 Paints 982
1009 Reinforcing Steel, Strand and Wire Rope 988
1010 Fence and Guard Rail 991
1011 Concrete Curing Materials, Admixtures and Special Finishes 995
1012 Vacant 998
1013 Metals 999
1014 Timber, Timber Connectors, and Preservatives 1005
1015 Signs and Pavement Markings 1011
1016 Concrete Pipe and Precast Reinforced Concrete Drainage Units 1032
1017 Epoxy Resin Systems 1036
1018 Miscellaneous Materials 1040
1019 Geotextile Fabrics and Geocomposite Systems 1047
1020 Traffic Signals 1051

List of Tables

	Description	Page No.
Table 104-1	Unauthorized Lane Closure or Late Lane Opening Rental	38
Table 107-1	Insurance Requirements	68
Table 108-1	Stipulated Damages	95
Table 203-1	Soil Properties	131
Table 301-1	Density Acceptance and Payment Schedule	164
Table 301-2	Supplemental Asphalt Concrete Layer Thickness	165
Table 301-3	Payment Adjustment Schedule	167
Table 302-1	Density Acceptance and Payment Schedule	176
Table 302-2	Base Course Thickness Tolerance	177
Table 302-3	Supplemental Asphalt Concrete Layer Thickness	178
Table 303-1	Density Acceptance and Payment Schedule	188
Table 303-2	Base Course Thickness Tolerance	188
Table 303-3	Supplemental Asphalt Concrete Layer Thickness	189
Table 304-1	Gradation Requirements for Types B & C Lime Treatment	194
Table 304-2	Types of Lime Treatment	198
Table 305-1	Minimum Quantities of Portland Cement and Lime	201
Table 305-2	Gradation Requirements for Treated Subgrade Layer	201
Table 309-1	Gradation Requirements for In-Place Cement Treated Subgrade	213
Table 401-1	Adjusted Vehicular Measurement (Materials Delivered by Volume)	217
Table 401-2	Adjusted Vehicular Measurement (Materials Delivered by Weight)	218
Table 402-1	Mainline Traffic	220
Table 501-1	Asphalt Mix Design	230
Table 501-2	Aggregate Physical	231
Table 501-3	JMF Extracted Gradation and Production	232
Table 501-4	Quality Control and Production	232
Table 501-5	Payment Adjustment	233
Table 501-6	Smoothness Payment Adjustment	233
Table 502-1	Test Procedures for Asphalt Concrete	235
Table 502-2	Asphalt Cement Usage	236
Table 502-3	Aggregate Friction	238
Table 502-4	Plant Produced Asphalt Mixture Requirements and Tolerances	262
Table 502-5	Asphalt Pavement Requirements	263
Table 502-6	Asphalt Concrete General	264
Table 502-7	Payment Adjustment Schedule for Minor Mix	265
Table 502-8	Payment Adjustment Schedules for Longitudinal Surface Tolerance, Maximum International Roughness Index	266
Table 502-9	Quality Index Values for Estimating Percent Within Limits (PWL)	267
Table 502-10	Payment Adjustment for Mainline Pavement Density (PWL)	268
Table 504-1	Asphalt Tack Coats	284
Table 505-1	Prime Coats	286
Table 506-1	Asphalt Curing	289
Table 507-1	Asphalt Surface Treatment (AST) Requirements (Cold Application)	295
Table 507-2	Asphalt Surface Treatment (AST) Requirements (Hot Application)	296
Table 507-3	Asphalt Emulsion Adjustment Rate	297
Table 601-1	Payment Adjustment Schedule for Mainline Longitudinal Surface Tolerance, Maximum International Roughness	325
Table 601-2	Individual Wheel Path Deficient Area Boundaries Requiring Corrective Action, Maximum International Roughness	326
Table 601-3	Payment Adjustment Schedule	326
Table 701-1	Payment Schedule for Plastic	360
Table 710-1	Flowable Fill Mix	390

List of Tables—(Continued)

	Description	Page No.
Table 711-1	Riprap	393
Table 713-1	Temporary Pavement Markings	405
Table 713-2	Payment Schedule Temporary Signs, Barricades and Related Devices	418
Table 717-1	Seeding	431
Table 718-1	Fertilizer Application Rates	432
Table 718-2	Fertilizer Factors	433
Table 719-1	Bed Preparation Material	441
Table 727-1	Mobilization Payment Schedule	461
Table 732-1	Field Testing of Plastic Pavement Markings	484
Table 732-2	Thermoplastic Payment Adjustment for Minimum Initial	486
Table 737-1	Field Testing of Painted Pavement	499
Table 737-2	Payment Adjustment for Initial	519
Table 740-1	Construction Layout Payment Schedule	526
Table 740-2	Utility Oversight and Coordination Payment Schedule	526
Table 802-1	Granular Backfill	549
Table 802-2	Stone Backfill	529
Table 802-3	Geomembrane	550
Table 802-4	Payment for Additional	556
Table 803-1	Mineral Slurry	559
Table 803-2	Polymer Slurry	560
Table 803-3	Water Slurry	560
Table 803-4	Minimum Slurry Test	562
Table 803-5	Drilled Shaft Access Tubes for CSL	572
Table 803-6	Horizontal	575
Table 804-1	Maximum Allowable Driving Stresses	600
Table 804-2	Vibration Monitoring Distance (VMD)	611
Table 804-3	Limiting Particle Velocity	611
Table 805-1	Classes and Uses of Concrete	618
Table 805-2	Tolerances for Cast-in-Place Concrete Construction	620
Table 805-3	Segment Roughness	621
Table 805-4	Concrete Cover	622
Table 805-5	Placement Rates for Slab Spans and Girder	624
Table 805-6	Removal of Support Forms and Falsework Cast-in-Place and Precast Non-Prestressed	628
Table 805-7	Forms and Falsework Removal Schedule, Cast-in-Place and Precast Non-Prestressed Concrete	628
Table 805-8	Concrete Surface	629
Table 806-1	Pins for Bar Bends	641
Table 806-2	Fabrication Tolerances	642
Table 806-3	Lap Splice Length for Grade 60 Steel	644
Table 806-4	Reinforcing Bar Weights	645
Table 807-1	Bearing Surface Finish	651
Table 807-2	Bolt Hole	653
Table 807-3	Steel Plate Minimum Cold Bending Inside	655
Table 807-4	Bolt Length	660
Table 807-5	Rotational Capacity Testing	662

List of Tables—(Continued)

	Description	Page No.
Table 807-6	Test Rotation from Initial Tension	663
Table 807-7	Installation and Inspection Tension Values	667
Table 807-8	DTI Verification Test	669
Table 807-9	DTI Inspection	671
Table 807-10	Nut Rotation from Snug Condition	672
Table 811-1	Top Coat Federal Color Number	688
Table 811-2	SSPC Abrasive and Surface Preparation Standards	700
Table 814-1	Coefficient of Friction of Bearing	735
Table 818-1	Plastic Properties	757
Table 818-2	Fiberglass Reinforcing Elements	758
Table 818-3	Dimensions and Tolerances	758
Table 818-4	Structural Properties	761
Table 821-1	Fits and Finishes for Common Mating Parts	808
Table 821-2	Torque Table for Stainless Steel Bolts	810
Table 821-3	Torque Table for High Strength Stainless Steel Bolts and Pins	813
Table 821-4	“A” Shim Packs-Number,Thickness, and Material	814
Table 821-5	“B” Shim Packs-Number, Thickness, and Material	815
Table 821-6	Physical Properties of Wire Rope with IWRC	834
Table 821-7	Physical Properties of Wire Rope with HFC	835
Table 821-8	Pipe Jacket Colors	842
Table 821-9	Pipe Marker Colors	842
Table 830-1	Structural Concrete Patching Material Requirements	905
Table 901-1	Volume of Coarse Aggregate Per Unit of Volume of Concrete	914
Table 901-2	Portland Cement Concrete Mixture Substitutions	917
Table 901-3	Master Proportion Table for Portland Cement Concrete	929
Table 901-4	Acceptance and Payment Schedules-Cast-In-Place Structural Concrete	930
Table 901-5	Acceptance and Payment Schedules Cast-In-Place Minor Structure Concrete	931
Table 901-6	Acceptance and Payment Schedules Structural Concrete	931
Table 1002-1	Cellulose Fiber Properties	936
Table 1002-2	Mineral Fiber Properties	937
Table 1002-3	Performance Graded Asphalt Cements	938
Table 1002-4	Emulsified Polymerized Asphalt	940
Table 1002-5	Non-Tracking Tack Coats-Cold Applied	941
Table 1002-6	Cationic Emulsified Asphalt (CSS-1h)	942
Table 1002-7	Anionic Emulsified Asphalt (SS-1h)	942
Table 1002-8	MC Cutback Asphalt	943
Table 1002-9	Asphalt Emulsion Prime (AEP)	944
Table 1002-10	Cationic Emulsified Petroleum Resin (EPR-1)	944
Table 1002-11	Hot Applied Modified Asphalt Cements for Asphalt Surface Treatment (PAC 15)	945
Table 1002-12	Non-Tracking Hot Applied Polymer (NTHAP) Tack Coat	946
Table 1003-1	Aggregate Test Procedures	948
Table 1003-2	Deleterious Materials in Aggregates	949

List of Tables—(Continued)

	Description	Page No
Table 1003-3	Aggregate Friction Rating	950
Table 1003-4	Gradation for Nonplastic Embankment, Stone	952
Table 1003-5	Gradation for Nonplastic Embankment, BCS	952
Table 1003-6	Gradation for Base Course Aggregates, Stone	953
Table 1003-7	Gradation for Base Course Aggregates, RPCC	953
Table 1003-8	Gradation for Base Course Aggregates, BCS	954
Table 1003-9	Gradation for Permeable Base Aggregates, Stone	954
Table 1003-10	Gradation for Subgrade layer, BCS	955
Table 1003-11	Gradation for Surface Course Aggregates, Stone/RPCC	955
Table 1003-12	Gradation for Surface Course Aggregates, Sand-Clay-Gravel	956
Table 1003-13	Gradation for Surface Course Aggregates, RAP	956
Table 1003-14	Gradation for Asphalt Aggregates, Mineral Filler	957
Table 1003-15	Gradation for Asphalt Surface Treatement	958
Table 1003-16	Gradation for Portland Cement Concrete Sand	959
Table 1003-17	Gradation for Mortar Sand	959
Table 1003-18	Gradation for Portland Cement Concrete, Uncrushed Aggregates	960
Table 1003-19	Combined Gradations for Portland Cement Concrete Aggregates	961
Table 1003-20	Gradation for Granular Material	961
Table 1003-21	Gradation for Bedding, Sand-Aggregate	962
Table 1003-22	Gradation for Bedding, Gravel	962
Table 1003-23	Gradation for Bedding, (RPCC or Stone)	963
Table 1004-1	Seed Requirements	965
Table 1004-2	Seed Analysis Tag	965
Table 1005-1	Polyurethane Sealants	970
Table 1005-2	Elastomer for Combination Joint Former/Sealer	972
Table 1005-3	Preformed Silicone Joint Seal Properties	973
Table 1005-4	Adhesive Properties	973
Table 1005-5	Elastomeric Sheet Properties	974
Table 1007-1	Metal Pipe Arch Dimensions (Inches)	980
Table 1008-1	Zinc Paint System Properties	983
Table 1008-2	Corrosion Inhibiting Alkyd Paint System Properties, Primer	985
Table 1008-3	Corrosion Inhibiting Alkyd Paint System Properties, Intermediate Coat	985
Table 1008-4	Corrosion Inhibiting Alkyd Paint System Chemical Requirements, Prime	986
Table 1008-5	Corrosion Inhibiting Alkyd Paint System Chemical Requirements Intermediate Coat	986
Table 1008-6	Paint Overcoat System Properties	967
Table 1009-1	General Wire Rope Classification and Usage	990
Table 1011-1	Special Finish Sample Acceptance	996
Table 1011-2	Physical Requirements for Admixtures	997
Table 1014-1	Split Ring Timber Connector Dimensions, Inches	1008
Table 1014-2	Minimum Retention of Preservative	1010

List of Tables--(Continued)

	Description	Page No.
Table 1015-1	Coefficients of Retroreflection for Fluorescent Pink Sheeting	1015
Table 1015-2	Fluorescent Pink Color Specifications Limits (Daytime)	1015
Table 1015-3	Coefficients of Retroreflection for DOTD Type X Sheeting	1016
Table 1015-4	Accelerated Weathering Standards	1017
Table 1015-5	Reflective Sheeting Performance Standards	1018
Table 1015-6	Manufacturer's Guaranty-Reflective Sheeting	1019
Table 1015-7	Color Specification Limits (Daytime)	1023
Table 1015-8	Specific Luminance of Preformed Plastic Tape	1026
Table 1015-9	Retained Specific Luminance for Retroreflectivity Level 1 Preformed Plastic Pavement Marking Tape	1026
Table 1015-10	Water Borne Traffic Paint Physical Properties	1028
Table 1015-11	Water Borne Traffic Paint Color Specification Limits (Daytime)	1028
Table 1015-12	Gradation of 1.9 Refractive Index Glass Beads	1029
Table 1015-13	Types of AASHTO M247 Glass Beads used for Flat Profile Thermoplastic Striping	1030
Table 1017-1	Epoxy Resin Adhesives	1038
Table 1017-2	Epoxy Resin Adhesives for Bonding Traffic Markers	1039
Table 1018-1	Joint Type Determination	1041
Table 1018-2	Erosion Control Systems	1046
Table 1019-1	Geotextile Fabrics	1049
Table 1020-1	Loop Detector Sealants	1058
Table 1020-2	Cabinet Hub Description	1067
Table 1020-3	Steel Pole Deflection	1070
Table 1020-4	Steel Signal Support Standards	1071
Table 1020-5	Steel Signal Support Standards Design Requirements	1072

PART I — GENERAL PROVISIONS

Section No. **Page No.**

101 General Information, Definitions, and Terms 2
102 Bidding Requirements 18
103 Award and Execution of Contract 28
104 Scope of Work 32
105 Control of Work 41
106 Control of Materials 61
107 Legal Relations and Responsibility to Public 67
108 Prosecution and Progress 88
109 Measurement and Payment 101

Section 101
General Information, Definitions, and Terms

101.01 VOICE/MOOD AND REFERENCES. This specification book uses the active voice, imperative mood when describing the contractor's responsibility. For example:

101.01.1 Active Voice/Imperative Mood: Provide competent supervision.

The subject of a sentence written in the active voice/imperative mood is not explicitly stated. In these specifications, the implied subject of such a sentence is typically the contractor, although in certain situations, the subject may also be a vendor, fabricator, or manufacturer engaged by the contractor to supply material, products, or equipment for use on the project. Prior to award of a contract, the imperative statements are directed to the bidder; it is only after the contract has been awarded that the imperatives are directed to the contractor.

Section and Subsection titles, and headings provide reference only, not interpretation.

A cross-reference to a specific Subsection of these specifications includes all general requirements of the Section of which the Subsection is a part.

Unless specified by year or date, cited publications refer to the most recent issue, including interim publications, in effect on the first date of advertisement for bids.

101.02 ACRONYMS AND ABBREVIATIONS. Wherever the following abbreviations or acronyms are used in the contract documents, they are to be interpreted as follows:

AA	Aluminum Association
AAR	Association of American Railroads
AASHTO	American Association of State Highway and Transportation Officials
ACI	American Concrete Institute
AGC	Associated General Contractors of America
AGMA	American Gear Manufacturers Association
AIA	American Institute of Architects
AISC	American Institute of Steel Construction
AISI	American Iron and Steel Institute

AML	Approved Materials List (DOTD)
ANSI	American National Standards Institute
API	American Petroleum Institute
AREMA	American Railway Engineering and Maintenance Association
ASCE	American Society of Civil Engineers
ASLA	American Society of Landscape Architects
ASTM	ASTM International (American Society for Testing and Materials International)
AWG	American Wire Gauge
AWPA	American Wood Protection Association
AWWA	American Water Works Association
AWS	American Welding Society
CPM	Critical Path Method
DBE	Disadvantaged Business Enterprise
DEQ	Department of Environmental Quality (Louisiana)
DOTD	Department of Transportation and Development (Louisiana)
EDSM	Department's Engineering Directives and Standards Manual
EPA	Environmental Protection Agency
FAA	Federal Aviation Administration, Department of Transportation
FHWA	Federal Highway Administration, Department of Transportation
FSS	Federal Supply Service, General Services Administration
ICEA	Insulated Cable Engineers Association
IMSA	International Municipal Signal Association
IRI	International Roughness Index
ISO	International Organization for Standardization
ITE	Institute of Transportation Engineers
LAPELS	Louisiana Professional Engineering and Land Surveying Board
LRS	Louisiana Revised Statutes
LSSRB	Louisiana Standard Specifications for Roads and Bridges
LTRC	Louisiana Transportation Research Center
MASH	Manual for Assessing Safety Hardware
MIL	Military Specifications
MUTCD	Manual on Uniform Traffic Control Devices (Current adopted edition)
NCHRP	National Cooperative Highway Research Program
NEC	National Electrical Code
NEMA	National Electric Manufacturers Association

NFPA	National Fire Protection Association International
OSHA	Occupational Safety and Health Administration
PCCP	Portland Cement Concrete Pavement
QC/QA	Quality Control/Quality Assurance
RMA	Rubber Manufacturers Association
SAE	Society of Automotive Engineers International
SI	Systeme Internationale or International System of Units
SSPC	Society for Protective Coatings, (formerly Steel Structures Painting Council
STB	Surface Transportation Board
TIMED	Transportation Infrastructure Model for Economic Development
UL	Underwriters Laboratories, Inc.

101.03 DEFINITIONS. Whenever the following words or expressions are used in the contract documents, they are to be defined as follows:

Acts of God. A cataclysmic phenomenon such as an earthquake, tidal wave, tornado, hurricane, or any other occurrence of nature beyond the control of the Department and contractor when the project is in a geographic area that has been declared by the government as a disaster area.

Adjustment. A change in contract time or compensation provided in accordance with 108.07 and 109.04.

Advertisement. A public announcement inviting bids, generally describing the project to be constructed; how to obtain the contract documents; and giving general bidding instructions including the time and place of opening bids.

Approved Materials List: Lists maintained by the Department's Materials and Testing Section for approved products, materials, and supplies which receive preliminary testing and/or review of company procedures. The Approved Materials List (AML) replaces the designation, “Qualified Products List (QPL).”

Approved Producer/Supplier. A material manufacturer, producer, supplier, source, or plant which has met all qualifications required by DOTD to supply materials for DOTD projects.

Assembly Period. Time the contractor is given to acquire approvals of required drawings, brochures, and other submittals, begin the purchase and assembly of materials, and to perform specified preconstruction activities. Contract time will not be charged during an assembly period.

Award of Contract. Transmission of the official written notice to the bidder that the Department intends to enter into a contract for the Project. Notice of award does not create a binding contract.

Base Course. The layer or layers of specified material of designed thickness constructed on the subgrade to support a surface course.

Bid. The binding offer of a responsible bidder that was submitted to the Department on the bid forms, or via approved electronic media, in accordance with the bidding documents.

Bid Express. An on-line service provided at Bidx.com, by Info Tech, Inc., which is under contract to DOTD to facilitate two-way internet electronic bidding.

Bid Forms. The portion of the bidding documents required to be submitted, in accordance with the bidding documents, which constitute a bid.

Bidder. An individual, partnership, corporation, or any other legal entity, or any acceptable combination thereof, or joint venture submitting a bid.

Bidding Documents. The advertisement, plans, specifications, bid forms, bidding instructions, addenda, special provisions, and all other written instruments prepared by or on behalf of the Department for use by bidders.

Bidx.com. The Info Tech, Inc. website that provides the Bid Express service.

Bridge. A structure, including supports, erected over a depression or an obstruction, such as water, highway, or railway, which has a track or passageway for carrying traffic or other moving loads, and having an opening measured along the center of the roadway of more than twenty feet

between undercopings of abutments, spring lines of arches, or extreme ends of openings for multiple boxes. A bridge may include multiple pipes where the clear distance between openings is less than one-half the smaller contiguous opening.

Bridge Length: The greater dimension of a structure measured along the center of the roadway between backs of abutment backwalls or between ends of bridge floor.

Bridge Roadway Width: The clear width of structure measured at right angles to the center of the roadway between the bottom of curbs or if curbs are not used, between the inner faces of parapet or railing.

Calendar Day. Every day on the calendar, beginning and ending at midnight.

Change Order (Plan Change). The standard form normally used to describe and detail changes to the contract. When approved and fully executed, the document becomes a part of the contract.

Conditional Notice to Proceed. Written notice to the contractor to proceed with ordering of materials, and when specified, performing other activities which would hinder progress in the beginning stages of construction.

Construction Proposal. Document furnished to prospective bidders by the Department consisting of, but not limited to, the notice to contractors, special provisions, supplemental specifications, plans, and bid forms.

Contract. The written agreement between the Department and the contractor setting forth obligations of the parties thereunder for performance of the prescribed work.

The contract documents include the advertisement, bid forms, contract form, payment/performance/retainage bond form, standard specifications, supplemental specifications, special provisions, plans, standard plans, change orders/special agreements, supplemental agreements, and other documents referenced therein that are required to complete the work in an acceptable manner, and contract time, including authorized extensions thereof, all of which constitute one instrument.

Contract Item. See "Pay Item."

Contract Time. The number of working days or calendar days allowed for completion of the contract, including authorized time extensions.
When a calendar date of completion is shown in the contract in lieu of a number of working or calendar days, work shall be completed by that date, including authorized time extensions.

Contractor. The individual, partnership, corporation, joint venture, other legal entity, or acceptable combination thereof, that is awarded a contract.

Controlled Access Highway. Any highway to or from which access is denied or controlled from or to abutting land or intersecting streets, roads, highways, alleys, or other public or private ways.

Controlling Item(s) of Work. The controlling items of work are those Pay Items shown on the accepted construction schedule which the contractor must timely complete in appropriate sequence in order to finish the Project within the Contract Time.

Control of Access. The condition where the right of owners or occupants of abutting land or other persons to access, light, air, or view in connection with a highway is controlled by public authority.
Full Control: Preference is given to through traffic by providing access connections with selected public roads only, and by prohibiting crossings at grade or direct private driveway connections.
Partial Control: Preference is given to through traffic to a degree that, in addition to access connections with selected public roads, there may be some crossings at grade, and some private driveway connections.

Critical Path Method (CPM). The method of network scheduling that utilizes computer programs to (*i*) arrange the sequence of project activities based on activity relationships and durations, (*ii*) show early and late activity start and completion dates, (*iii*) determine the longest continuous sequence of activities, the critical path, that establishes the minimum overall project duration and identifies the activities on that path, and (*iv*) facilitate allocation of resources and estimates of contract earnings.

Culvert. Any drainage structure under a roadway or other facility not defined as a bridge.

Dedicated Stockpile. A stockpile which has been sampled, tested, and

approved. Once approved, it shall not be altered.

Department. The Department of Transportation and Development of the State of Louisiana.

Department of Transportation and Development. The Louisiana Department of Transportation and Development, through its offices and officers, responsible for developing and implementing programs to ensure adequate, safe, and efficient transportation, and other public works facilities and services in the state in accordance with Chapter 11 of LRS Title 36 as amended.

Disadvantaged Business Enterprise (DBE). A DBE is a for-profit small business concern that is at least 51 percent independently owned and controlled, in both substance and form, by one or more individuals who are both socially and economically disadvantaged and participating in the DBE Program mandated by the U.S. Department of Transportation Financial Assistance Programs.

Disqualified. Contractor's or Bidder's status during the time period in which the Department will not accept its Bids or approve it as a subcontractor.

Electronic Bid Bond. An instrument by which a contractor and surety can submit a bid guarantee with a bid electronically in lieu of a written signed paper.

Electronic Bidding. The process by which the Department and the bidder can utilize the Internet to facilitate the bidding process.

Electronic Signature. A secure and verifiable alphanumeric code assigned to an individual, replacing or acting instead of a traditional signature.

Engineer. The Chief Engineer, acting directly or through duly authorized representatives, who is responsible for contract administration including engineering supervision of the work. When the term "Chief Engineer" is used, it shall mean the Department's Chief Engineer in person or the Department's duly appointed designee.

Engineer of Record (EOR). The professional engineer licensed in the State of Louisiana responsible for the professional quality, technical accuracy, and coordination of all designs, drawings, specifications, and other engineering services necessary to develop the criteria and concept of the project, perform design analysis, prepare project plans and specifications, and who seals, signs, and dates the plans and documents certifying that the work thereon was done by the licensee or under his/her responsible charge.

Engineering Directives and Standards Manual (EDSM). A set of manuals containing directives and standards of the Department.

Equipment. All machinery, equipment, tools, and apparatus necessary for acceptable completion of the work.

Expedite. Software developed for AASHTO by Info Tech that enables and facilitates electronic bidding.

Extra Work. Work not provided for in the contract as awarded but found necessary by the Department for satisfactory completion of the contract within its intended scope.

Falcon. Falcon is the Department's plan publishing software, accessible via the Department's web site, used to search, view, print, and download indexed final project plans and plan related documents, and to enable plan and proposal related questions and answers between potential bidders and the Department.

Falsework. Temporary construction work on which a main work is wholly or partly built and supported until it is strong enough to support itself; a temporary framework used to support part or all of a structure during demolition.

Force Account. Payment for directed construction work based on the cost of labor, equipment, materials furnished, overhead, and profit, in accordance with 109.04.

Fresh Concrete. Concrete in the plastic state before achieving initial set.

Highway, Street, or Road. A public way for vehicular travel, including the entire area within the right-of-way.

Incidental Work. Work required by the contract that is not directly measured and for which no specific pay item is provided, including all work necessary to satisfactorily complete all pay items.

Inspector. The engineer's authorized representative assigned to make detailed inspections of contract performance.

Invitation For Bids. See "Advertisement."

Item. See "Pay Item."

Laboratory. The Department's testing laboratory or any other testing laboratory which meets the qualifications required by the contract.

Local Street or Local Road. A street or road not in the state maintained system.

Major Item. A pay item included in the contract with a total cost equal to or greater than 10 percent of the original total contract amount.

Manual on Uniform Traffic Control Devices (MUTCD). The manual adopted by the Department to describe the uniform system of traffic control devices used on state highways.

Materials. Any substances used in the work.

Materials Sampling Manual. The manual used to establish and standardize construction and maintenance sampling and material acceptance requirements for the Department.

Median. The portion of a highway separating traveled ways for traffic in opposite directions.

Minor Item. A pay item included in the contract as awarded with a total cost of less than 10 percent of the original total contract amount.

Notice of Contract Execution. The notice from the Department that

the contract has been fully executed. Once fully executed, the contract is binding.

Notice to Proceed. Written notice to the contractor to proceed with the contract work which will stipulate the dates that work shall commence and contract time shall begin.

Parish. A political subdivision corresponding to a county in other states.

Pavement Structure. The combination of base courses and surface course placed on a subgrade across the roadbed.

Pay Item. A specific portion of work for which a price is provided in the contract.

Payment/Performance/Retainage Bond. The approved form of security, executed by the contractor and surety, guaranteeing complete execution of the contract and supplemental agreements thereto, and payment of all legal debts, including liens and monies due the Department, pertaining to the contract.

Plans. The contract drawings, which show location, type, dimensions and other details of the prescribed work.

Producer/Supplier. A material manufacturer, producer, supplier, source, or plant which has met all qualifications required by DOTD to supply materials for DOTD projects.

Profile Grade. The trace of a vertical plane intersecting the top surface of the proposed wearing surface or other designed course usually along the longitudinal centerline of the roadbed. Profile grade means either elevation or gradient of such trace according to the context.

Project. A specific undertaking, as described by the contract within prescribed limits, consisting of all work necessary for satisfactory completion of the contract within its intended scope, including any extra work added to the contract.

Project Engineer. The engineer assigned to represent the Chief Engineer in the administration of the contract.

Project Limits. That area between the Begin and End stations as shown on the plans and from Right-of-Way line to Right-of-Way line, unless otherwise noted on the plans. On projects with offset beginning/ending points of construction or Design-Build projects, the area is defined as the two most distant points of the Limits of Construction as indicated on the plans, from Right-of-Way line to Right-of-Way line.

Project Number. A number used to identify the project.

Proposal. See "Bid."

Proposal Form. See "Bid Forms."

Proposal/Bid Guaranty. The required security furnished with a bid. The only form of security acceptable is a Bid Bond.

Qualified Products Lists. The Approved Materials List (AML) replaces the designation, “Qualified Products List (QPL)”.

Quality Assurance (QA). A program developed by the contractor that incorporates the contractor’s Quality Control (QC) and Department Acceptance to ensure that a project adheres to the contract requirements.

1. Quality Control (QC) is the process used by the contractor to monitor, assess and adjust material selections, production and project construction to control the level of quality so that his product continuously and uniformly conforms to specifications.
2. Department Acceptance is the process of sampling, testing and inspection to determine the degree of compliance with the specifications for acceptance of materials and/or the contractor’s work.

Railway/Railroad. Owner or lessee(s) of railroad tracks and appurtenances.

Right-of-Way. Land, property, or interest therein, acquired for or devoted to transportation purposes.

Roadbed. The graded portion of a roadway prepared as a foundation for the pavement structure within the top of the side slopes, including the shoulder.

Roadside. The area adjoining the outer edge of the roadbed. Extensive areas between roadways of a divided highway may also be considered roadside.

Roadside Development. Those items necessary to complete the highway which provide for preservation of landscape materials and features; rehabilitation and protection against erosion of areas disturbed by construction through seeding, sodding, mulching, and placing of other ground covers; and suitable planting or other improvements to increase the effectiveness and enhance the appearance of the highway.

Roadway. The portion of a highway within the limits of construction.

Secretary. The Secretary for the Louisiana Department of Transportation and Development.

Service Road or Frontage Road. A street or road on the side of the mainline roadway for service to abutting property and adjacent areas, and for control of access.

Small Business Enterprise (SBE). As defined by Section 3 of the U.S. Small Business Act and S.B.A. regulations, a for-profit business that is at least 51 percent owned by one or more individuals who are economically disadvantaged, and whose company is a small business concern in accordance with 49 C.F.R. § 26.65.

Specialty Item. A pay item designated in the contract that may be performed by subcontract and the cost of such may be deducted from the total contract cost before computing the amount of work required to be performed by the contractor with the contractor's own organization.

Specifications. The written directions, provisions, and requirements contained in the Contract Documents that describe the work under the Contract. The specifications are further defined as follows:

1. Standard Specifications: The “Louisiana Standard Specifications for Roads and Bridges” a bound book or electronic media, applicable to all Department Contracts containing adopted specifications for state-wide use.
2. Supplemental Specifications: Approved additions and revisions to the Standard Specifications, and included in all Department Contracts.

3. Special Provisions: Specific requirements adopted by the Department that amend the Standard Specifications or supplemental specifications, applicable to a specific project.

a. Non-Standard Special Provision: A specification that describes requirements for an unusual item or one that should not be part of the Standard Specifications.

b. Technical Special Provisions: Specifications, of a unique or highly technical nature, prepared, signed, and sealed by an Engineer or Architect registered in the State of Louisiana with recognized expertise in the field, that are made part of the Contract as an attachment to the Contract Documents.

c. Developmental Special Provision: A specification developed for a new process, procedure, or material to be monitored by LTRC.

Specified. Required or stipulated in the contract documents.

Standard Plans. Department drawings approved for repetitive use, showing the details to be used where appropriate.

State. The State of Louisiana, acting through its authorized representative.

Storm Drain. A fully contained and connected set of drainage structures, which capture the rain water runoff from our transportation system.

Structures. Bridges, tunnels, culverts, catch basins, junction boxes, retaining walls, cribbing, manholes, end-walls, buildings, sewers, service pipes, underdrains, foundation drains, and other similar features encountered in the work.

Subcontractor. An individual, partnership, corporation, joint venture, other legal entity or acceptable combination thereof, to which the contractor sublets part of the work. Any individual, partnership, corporation, joint venture, other legal entity or acceptable combination thereof shall not be considered to be a subcontractor if it is a subsidiary, wholly owned or majority owned by the contractor or the principals of the contractor, or an affiliate of the contractor or affiliated or otherwise controlled by the contractor or the principals of the contractor such that a true and independent subcontractor-contractor relationship reached by bidding or arms-length negotiation does not result therefrom.

Subgrade. The surface upon which the pavement structure, including shoulders, are constructed.

Subgrade Layer. The surface layer of the subgrade, which requires treatment with an approved additive or asphalt.

Submittals. Detailed drawings and documents provided by the contractor as required by the contract.

Substructure. That part of the structure below the bearings of simple and continuous spans, skewbacks or arches, and tops of footings of rigid frames, including backwalls, wingwalls, and wing protection railings.

Superintendent. The contractor's authorized representative in responsible charge of the work.

Superstructure. The entire structure except the substructure.

Surety. The corporation, partnership, or individual other than the contractor, executing a bond furnished by the contractor.

Surface Course. The top course of the pavement structure.

Technician. The contractor's or the Department's representative who shall be either certified or authorized as required in the specifications.

Testing Procedures Manual. The manual which contains testing procedures specifically required by the DOTD. Each procedure is designated as "DOTD TR xxx" in the specifications. These procedures are distinct from AASHTO and ASTM procedures.

Through and Local Traffic.

1. Through Traffic - Traffic that has neither its origin nor destination within the limits of the project.
2. Local Traffic - Traffic that has either its origin or destination, or both, within the limits of the project.

Traffic/Travel Lane. The portion of traveled way for movement of a single lane of vehicles.

Traveled Way. The portion of roadway for movement of vehicles, exclusive of shoulders and auxiliary lanes.

Unit. A quantity adopted as a standard for measurement of work.

Work. The furnishing of labor, materials, services, equipment, and incidentals necessary for successful completion of the project and the carrying out of all obligations imposed by the contract.

Work Order. See Notice to Proceed.

Working Day. A calendar day on which weather or other conditions not under control of the contractor will permit construction operations to proceed in accordance with 108.07.

Working Drawings. Drawings produced and submitted by the contractor in accordance with 105.02 that describe the contractor's work, means, and/or methods of construction, including, for example, supplemental design sheets, shop drawings, bending diagrams, and construction joint locations.

101.04 UNDERSTOOD WORDS OR EXPRESSIONS. Where the party responsible for the work, testing, or sampling described is not specifically identified, the work is to be performed by the contractor.
To avoid cumbersome repetition of the following words or expressions in the contract or plans, it is provided that whenever anything is, or is to be done, if, as, or, when or where "contemplated, required, determined, directed, authorized, ordered, given, designated, indicated, considered necessary, deemed necessary, permitted, reserved, suspended, established, approval, approved, disapproved, acceptable, unacceptable, suitable, accepted, satisfactory, unsatisfactory, sufficient, insufficient, rejected, condemned, waived, or written consent," it shall be understood as if the expression were followed by the words "by the engineer" or "to the engineer".

Whenever the contract or plans contain the expressions "no direct pay, no direct payment, not measured for payment, at no additional cost or expense to the Department, will not be measured for payment, considered incidental to other items of work, no payment will be made for this work, shall not be entitled to extra payment," or any variation of one of these expressions it shall be understood by the bidder that the designated work is

to be considered incidental work and the cost of such work shall be included in the price bid on other pay items.

When plans, including “as-built” plans from previous projects, specifications, plan notes, general notes, special or supplemental provisions, or other bid or contract documents provide information or data with a notation indicating that the information or data is provided “For Information Purposes” or “For Information Purposes Only,” the Department provides such information, representations, or data only for illustrative purposes.

Section 102
Bidding Requirements

102.01 PREQUALIFICATION OF BIDDERS. To qualify for submission of a bid, the bidder shall comply with all rules and regulations of the Louisiana State Licensing Board for Contractors.

102.02 CONTRACTORS' LICENSING LAWS. Attention is directed to the rules and regulations of the State Licensing Board for Contractors. Information relative to licensing may be obtained from the offices of said Board in Baton Rouge.

If the estimated project cost is $50,000 or more, only licensed contractors may receive bid forms, unless federal funds are involved. When federal funds are involved, non-licensed contractors may receive bid forms and submit bids; however, if the contractor's bid is $50,000 or more, the successful non-licensed bidder will be required to obtain the proper license before execution of the contract.

When the estimated project cost is greater than $50,000, the contractor shall show his license number, if required, on the bid envelope unless the contractor submits the bid via the Department approved electronic bidding process. If a subcontract amount is $50,000 or more, both the contractor and subcontractors are subject to the rules and regulations of the State Licensing Board for Contractors.

When landscaping is the predominant work on the project and no federal funds are involved, prior to receiving bid forms, the prospective bidder will be required to possess a current Landscape Contractors license from the Horticulture Commission of the Louisiana Department of Agriculture and Forestry.

The contractor will be required to ensure all work performed conforms to Louisiana licensing laws and permit requirements.

102.03 CONTENTS OF BIDDING DOCUMENTS. The Department will furnish prospective bidders with or access to bidding documents. For all electronic bidding, the prospective bidder will use the Bid Express services through Bidx.com. The use of these services will require payment by the contractor of additional fees to the service provider.

The construction proposal will state the location and description of the contemplated work, will show the estimated quantities and kinds of work to

be performed, and will include the bid forms to be completed and returned by the bidder. The construction proposal will state the time in which the work must be completed, and the date, time, and place of opening bids. The construction proposal will also include any supplemental specifications, special provisions, or requirements, which vary from or are not contained in the Standard Specifications. The plans, specifications and other documents designated in the construction proposal will be considered a part of the construction proposal whether attached or not.

Unless the contractor properly submits the bid forms electronically, the bid forms bound with or attached to the construction proposal should be detached, completed, and returned by the bidder. The bid forms consist of the Schedule of Items, the Proposal/Bid Guaranty as required by 102.09, the Construction Proposal Signature and Execution Form, and any other returnables if required in the construction proposal.

Unless explicitly stated otherwise in the contract, when the name of a certain brand, make, manufacture, or definite specifications limit the product or source to be supplied under or pursuant to a specification in this contract to a single product or source, that specification shall not restrict bidders to the specified brand, make, manufacture, product or source, but to set forth and convey to prospective bidders the general style, type, character, quality and salient performance criteria desired by the Department of the product or source specified. The specified product or source shall be a standard by which substitute products or sources will be compared to determine if the substitute product or source will be approved for substitution as equal to or superior to the general style, type, character, quality and salient performance criteria of the product or source specified. Bidders are informed that substitute products or sources shall be submitted to the Chief Engineer for prior approval no later than seven working days prior to the opening of bids in accordance with LRS 38:2295(C). The Department will approve or deny substitution of the product or source submitted within three days, exclusive of holidays and weekends. If a product or source sought to be used as a substitute for the product or source specified is not submitted prior to the opening of bids as provided in LRS 38:2295(C), the Department has the right to require the product or source specified. Substitution of a product or source submitted in substitution of the product or source specified after the seven-day period prior to the opening of bids may only be allowed after that time in the Chief Engineer's sole discretion pursuant to 105.01.

102.04 ISSUANCE OF BID DOCUMENTS. The Department may refuse to accept bid documents from a bidder, or allow a bidder access to Bid Express for bidding purposes, for any of the following reasons:

1. Failure of the bidder to comply with any prequalification requirements of the Department.
2. Disqualification of the bidder.
3. If the bidder is in default of a contract in accordance with 108.09 and a notice of default terminating the contractor's participation has been issued.
4. The bidder being included on the List of FHWA Suspension/Debarment Actions or having been found unacceptable for employment on Federal-Aid Projects.
5. When registration for bidding or requesting bid documents within 24 hours before the opening of bids.
6. Any bidder debarred in accordance with Part XIII-B of Chapter I of LRS 48.
7. Any bidder disqualified for Proposal/Bid Guaranty forfeiture or non-payment in accordance with 103.07.

102.05 INTERPRETATION OF PAY ITEMS, UNIT PRICES, AND QUANTITIES IN SCHEDULE OF ITEMS. The quantities in the Schedule of Items are prepared for comparison of bids and are calculated approximations. Payment will be made in accordance with measurement and payment requirements for pay items and other requirements of the contract. Pay item quantities may be increased, decreased, or eliminated by the Department. Nothing in the Bidding Requirements, or anywhere else in the contract, is intended to amend, prohibit, or release the contractor from performance of the work specified in the plans and specifications for which no direct pay item is included (i.e., without compensation), in addition to that in the Schedule of Items. The contract unit price for a scheduled item shall include all direct costs, all overhead, any profit, and all indirect, incidental, and subsidiary costs, necessary to complete the item, and any incidental work not measured for payment as described under the individual pay items listed in the Schedule of Items. The contractor shall perform all work required to complete the project.

102.06 EXAMINATION OF BID DOCUMENTS AND SITE OF WORK. Written instructions necessary to use the electronic bidding service and prepare and submit a bid electronically are provided on the Bidx.com Internet site. Fees payable to Bidx.com are required of the

bidder to use the service and to establish electronic signatures. The bidder is advised to timely make all necessary arrangements with Bidx.com and to familiarize himself with system and process requirements prior to using the service to submit a bid.

The bidder shall examine carefully the bidding documents before submitting a bid. If the bidder discovers an error, omission, or ambiguity in the plans or proposal, prior to the date of the bid opening, he shall immediately notify the Department, through Falcon.

The bidder shall also examine the site of the proposed work before submitting a bid. In the event the bidder's site investigation reveals that the site conditions are inconsistent with the contract documents, the bidder shall immediately notify the Department, through Falcon.

Any subsurface tests and boring data which have been compiled by the Department and furnished to the bidder shall not be considered as fully representative of subsurface conditions and is not intended as a substitute for personal investigation, interpretations and judgment of the bidder.

By submitting a bid, the bidder represents and warrants that bidder has carefully and thoroughly reviewed and examined all bid documents, including all project plans and specifications; and examined and inspected the project site for the purpose of identifying, assessing, and determining all observable or apparent site conditions that may have an impact on the performance of the work.

By submitting a bid, the bidder further represents and warrants that (1) review and examination of the bid documents, including all project plans and specifications, has not revealed or otherwise indicated, and bidder is otherwise unaware of, any error, omission, ambiguity or deficiency of any kind in any of the bid documents or the information reflected by the bid documents; (2) examination and inspection of the project site has not revealed or otherwise indicated, and bidder is otherwise unaware of, any apparent or otherwise observable site condition that may have an impact on the performance of the work; or (3) that Bidder has provided to the Department written notice identifying and detailing any site condition or error, omission, ambiguity or deficiency of any kind in any of the bid documents or the information reflected by the bid documents that may have a significant impact on the performance of the project, including the cost of the project or the time required to complete the work.

102.07 PREPARATION OF BID. Bids shall be submitted on bid forms provided by the Department or accessed through Bidx.com. Only that portion of the construction proposal designated as Bid Forms must be

completed and returned by the bidder. The bid forms include the Schedule of Items, the Proposal/Bid Guaranty as required by 102.09, the Construction Proposal Signature and Execution Form, and any additional returnables if required in the construction proposal.

A unit bid price shall be specified in the Schedule of Items in English words or numerals in U.S. dollars, either typed, printed in ink, or computer printed in the spaces provided for each pay item or alternate pay item. If no alternate pay items are included in the Schedule of Items, bidders shall bid on all items; if alternate items are included, bidders shall bid on all "General Items" and on only one of the groups of items under each set of "Alternate Items." When Additive Alternates are included, the bidders shall bid on all Additive Alternates.

Submission of the bid shall constitute bidder's verification that (1) it has not based any bid prices on the anticipated approval of a Value Engineering Proposal, as described in 105.19.3, (2) it acknowledges that any Value Engineering Proposal may be rejected, and (3) in the event of the rejection of such a proposal, the contractor will be required to complete the contract at the contract bid prices.

The Construction Proposal Signature and Execution Form shall be signed either with an authorized electronic signature or with ink by any of the following who are legally qualified and acceptable to the state:

- an individual;
- a member of the partnership;
- an officer of one of the firms representing a joint venture ;
- an officer of a corporation; or
- an agent of the bidder.

The bidder's business street address and mailing address, if different, and the business telephone number of the individual signing the form and that of a contact person shall be shown on the Construction Proposal Signature and Execution Form.

Execution, signature, and submission of the Construction Proposal Returnables shall constitute a legally binding and irrevocable offer by the bidder.

Electronic bid bonds will be furnished and completed by a Department approved electronic bond verification service.

102.08 IRREGULAR BIDS. Bids may be considered irregular or non-responsive and will be subject to rejection for any of the following conditions:

1. If the bid, except for legible facsimiles, is on a form other than that furnished by the Department or Bidx.com or if the bid forms are materially altered.

2. If there are unauthorized additions, conditional or alternate bids or irregularities which make the bid incomplete, indefinite, or ambiguous as to its meaning.

3. If the bidder adds provisions reserving the right to accept or reject the award or to enter into the contract pursuant to the award.

4. If the bid does not contain a legible unit price in accordance with 102.07 for each pay item listed.

5. If the bid is submitted by a bidder other than the one to whom the construction proposal was issued.

6. If the bidder is in default of a contract in accordance with 108.09 and a notice of default has been issued to the bidder.

7. If an owner (part or as a whole), registered agent, license holder, manager, organizer, or a principal officer(s) of the bidding entity is an owner (part or as a whole), registered agent, license holder, manager, organizer, or a principal officer(s) of another or the same bidding entity or of a contracting entity which has been declared by the Department to be ineligible to bid for any reason.

8. If the proposal/bid guaranty does not meet requirements of 102.09.

9. If more than one bid for the same work is received from an individual, partner, corporation, or any other legal entity, joint venture, or combination thereof under the same or a different name, or bidder has a direct financial interest in any bid submitted by another bidder.

10. If the portion of the construction proposal form designated as Bid Forms is not properly executed either by hand or electronically and submitted with the bid.

11. If unit prices are obviously distorted or unbalanced to reflect an advantage to the contractor which would result in undue expenditure of public funds and/or overrun of total cost of project.

12. If it is determined by the Department that collusion and/or the bid rigging has occurred on a project.

13. If the bidder is disqualified in accordance with 108.04.

14. If the bidder is debarred in accordance with Part XIII-B of Chapter 1 of LRS Title 48.

15. If the bidder is disqualified for Proposal/Bid Guaranty forfeiture or non-payment in accordance with 103.07.

16. If the apparent low bidder fails, neglects, or refuses to properly and timely submit any required documentation prior to award of contract.

Upon any such failure, the original apparent low bidder will be declared irregular and will not be allowed to bid on the project should re-advertisement occur.

17. If the bidder is prohibited from bidding or working on any federally funded project by the Federal Highway Administration.

102.09 PROPOSAL/BID GUARANTY. Each bid shall be accompanied by a proposal/bid guaranty in an amount not less than five percent of the total bid amount when the bidder's total bid amount as calculated by the Department in accordance with 103.01 is greater than $50,000. No proposal/bid guaranty is required for projects when the bidder's total bid amount as calculated by the Department is $50,000 or less. The official total bid amount for projects that include alternates is the total of the bidder's base bid and all alternates bid on and accepted by the Department. The proposal/bid guaranty submitted by the bidder shall be a bid bond made payable to the contracting agency as specified on the bid bond form provided in the construction proposal. No other form of security will be accepted.

The bid bond shall be on the "Bid Bond" form provided in the construction proposal, on a form that is materially the same in all respects to the "Bid Bond" form provided, or on an electronic form that has received Department approval prior to submission. The bid bond shall be filled in completely, shall be signed by an authorized officer, owner or partner of the bidding entity, or each entity representing a joint venture; shall be signed by the surety's agent or attorney-in-fact; and shall be accompanied by a notarized document granting general power of attorney to the surety's signer. The bid bond shall not contain any provisions that limit the face amount of the bond.

The bid bond shall be written by a surety or insurance company that is in good standing and currently licensed to write surety bonds in the State of Louisiana by the Louisiana Department of Insurance and also conform to the requirements of LSA-R.S. 48:253.

All signatures required on the bid bond may be original, mechanical reproductions, facsimiles or electronic. Electronic bonds issued in conjunction with electronic bids must have written Departmental approval prior to use. The Department will make a listing of approved electronic sureties providers on the Bidx.com site.

102.10 DELIVERY OF BIDS. Unless delivered electronically through the approved electronic bid submission service, each bid should be submitted in the envelope furnished by the Department, if issued. The blank spaces on the envelope shall be filled in correctly to clearly indicate its content. When an envelope other than the one furnished by the Department is used, it shall be the same general size and shape and be similarly marked to indicate its contents, including, if required, the contractor's Louisiana contracting license number. Bids and bid bonds shall be received no later than the time and at the place specified in the Notice to Contractors. Paper bids and bid bonds received after the time set for opening bids will be returned to bidders unopened. Electronic bids shall be submitted via the Internet in accordance with 102.07. Electronic bids transmitted by the bidder after the time set for bid opening will not be accepted.

102.11 WITHDRAWAL OR REVISION OF BIDS. For paper bids, a bidder may withdraw or revise a bid after it has been deposited with the Department, provided the request for such withdrawal or revision is received by the Department's issuing office in person, in writing, or by email, before the time set for opening bids and at the location set forth in the Notice to Contractors. Electronic bids submitted to Bid Express may be withdrawn prior to the specified bid opening time by the authorized bidder.

102.12 PUBLIC OPENING OF BIDS. Paper or electronic bids will be publicly opened and read or presented at the time and place indicated in the Notice to Contractors.

102.13 WITHDRAWAL OF BIDS DUE TO ERROR.

102.13.1 Withdrawal of Bid: The Department may allow a bidder to withdraw a bid after the scheduled time of bid opening in accordance with LRS 48:255, if a bid contains patently obvious mechanical, clerical, or mathematical errors and if clear and convincing sworn, written evidence of such errors is furnished to the Department within seventy-two hours of the bid opening, excluding Saturdays, Sundays, or other legal holidays. If the Department determines that the error is a patently obvious mechanical, clerical, or mathematical error, it shall accept the withdrawal request and return the bid security to the contractor. If the bid withdrawn is the lowest bid, the next lowest bid may be accepted.

Submission of a bid withdrawal request shall constitute bidder's agreement to suspend the tolling of time for award of the contract during the pendency of the request. The award deadline will be extended by the number of days, rounded up to the nearest whole day, from the submission of a bid withdrawal request until the Deartment's determination regarding said request.

102.13.2 Other Bid Protests: The Department may also allow a bidder to protest any matter regarding the bidding or award of a contract after the scheduled time of bid opening.

The protest of a bidder must be submitted in writing and, specifically set forth the grounds and/or reasons for the protest. The written protest must be delivered to the DOTD Chief Engineer within 72 hours after notice of bid rejection, irregularity or any other action regarding the bidding of the contract, excluding Saturdays, Sundays, and legal holidays.

102.13.3 Hearing by the DOTD Chief Engineer - Prior to Contract: If a bidder files a notice of error along with a request to withdraw the bid, or protests in a timely manner any other matter regarding the bidding or award of the contract, the DOTD Chief Engineer, or designee, will hold a hearing within a reasonable period of time after a request has been delivered. The DOTD Chief Engineer will give the requesting bidder reasonable notice of the time and place of the hearing. The bidder may appear at the hearing and present evidence together with other facts and arguments in support of the request, except, for a request to withdraw a bid for reason of error, the bidder making such request will be limited to the sworn written evidence submitted within the time period prescribed in this subsection.

102.13.4 Proposal / Bid Guaranty: When notice of a bid mistake and a request to withdraw the bid is made, the proposal/bid guaranty shall continue in full force and effect until and unless there is a determination by the Secretary that the conditions of 102.13.1 have been met. If the Secretary determines that an error occurred in the preparation of the bid in compliance with the statutory and contractual requirements, the Department will return the proposal/bid guaranty to the bidder.

102.13.5 Bid Withdrawal Consequences: If it has been determined that an error has been made and the bidder is allowed to withdraw a bid, the individual, partnership, corporation, or any other legal entity or joint venture submitting the bid will not be allowed to resubmit a bid on the project, perform work on the project as a subcontractor or sub-subcontractor, or to supply any material or labor to the entity to whom the contract is ultimately awarded.

If all bids are rejected after a bid is successfully withdrawn, the withdrawn bidder shall not be eligible to bid on the project unless the re-advertisement and opening of bids for the work is at least one hundred eighty days after the date the bid is withdrawn.

Section 103
Award and Execution of Contract

103.01 CONSIDERATION OF BIDS. After paper or electronic bids are opened and read, they will be compared based on the summation of the products of the quantities and the unit bid prices in the Schedule of Items. Results of such comparisons will be available to the public.

The Department reserves the right to reject bids, waive technicalities and informalities, or advertise for new bids in accordance with the following sections:

103.01.1 Rejection of Low Bid: The right is reserved to reject the low bid for any of the following reasons and contract with the next lowest responsive bidder or advertise for new bids:

1. A low bidder's bid is considered irregular as indicated in 102.08.
2. On DBE Goal Projects, the low bidder fails to submit the required information and satisfy the DBE requirements as specified in the DBE contract provisions for the project.
3. The low bidder fails to agree to mutually extend the period required for Award of Contract as indicated in 103.02.
4. The low bidder successfully withdraws the bid in accordance with 102.11.
5. The low bidder is prohibited from bidding or working on any federally funded project by FHWA. This cause applies for state or federally funded projects.

103.01.2. Rejection of All Bids: All bids may be rejected for just cause consisting of any of the following:

1. The Department's unavailability of funds sufficient for the construction of the project or the unavailability of funding participation in the project by anticipated funding sources.
2. The failure of all bidders, not considered as irregular, to submit a bid within the established threshold of the construction estimate for the project by the Department's engineers.
3. A substantial change in scope or design of the project occurring prior to award.
4. A determination of the Department or the funding agency not to build the proposed project within twelve months of the letting date.
5. The disqualification or rejection by the Department of all bidders.
6. The discovery, by the Department prior to award, that an error,

defect, or ambiguity was contained within the bidding documents, that these defects may have affected the integrity of the competitive bidding process or may have led to a potential advantage or disadvantage to one or more of the bidders.

103.02 AWARD OF CONTRACT. The Department shall award the contract to the lowest responsible bidder within 45 calendar days after the receipt of bids or within 20 days after the receipt by the Department of concurrence in award from all funding agencies or sources, whichever occurs last. Where concurrence in award is required, the total time from receipt of bids to award of contract, shall not exceed 60 calendar days unless extended by mutual agreement between the Department and the successful low bidder. Should the successful low bidder not agree to extend the deadline for award of contract, the proposal/bid guaranty may be returned to the bidder and the Department, at its discretion, may award the contract to the next lowest bidder or may readvertise the project.

An enforceable contract is not created until it is fully executed by all parties.

103.03 CANCELLATION OF AWARD. The Department reserves the right to cancel the award of contract at any time before execution of said contract by all parties without liability against the Department for any of the following reasons:

1. Any of the just causes contained in 103.01.2.
2. The low bidder fails to agree to mutually extend the period required for issuance of the Notice to Proceed as indicated in 103.08.
3. The contract, satisfactory bonds, proof of all required policies of insurance with minimum insurance coverage, and all other required contract documents are not properly executed and returned to the Department within the required time period specified in 103.06.

103.04 RETURN OF PROPOSAL/BID GUARANTY. The proposal/bid guaranty of the successful bidder will be returned after the contract, satisfactory bonds, and all other required contract documents are properly executed and returned to the Department within the required time period specified in 103.06. Unsuccessful bidders proposal/bid guaranties in the form of checks or money orders will be returned to the bidder not later than sixty days after receipt of bids. The Department will destroy the bid bonds of unsuccessful bidders not later than sixty days after receipt of bids. Electronic bid bonds of unsuccessful bidders will not be returned but

will be deemed by the Department to have no force or effect after sixty days.

This subsection will not apply where the forfeiture of the proposal/bid guaranty is warranted.

103.05 PAYMENT, PERFORMANCE, AND RETAINAGE BONDS. At the time of execution of the contract, the successful bidder shall furnish, as provided below, the following performance and payment bonds on the forms provided by the Department, and may, at the successful bidder's option, furnish a retainage bond.

1. Payment bond in a sum equal to one hundred percent (100%) of the contract amount.

2. Performance bond in a sum equal to one hundred percent (100%) of the contract amount.

3. Retainage bond in a sum equal to five percent (5%) of the contract amount for contract amounts greater than $500,000 unless an election is made to have the Department withhold five percent (5%) of the contract amount; and, retainage bond in a sum equal to ten percent (10%) of the contract amount for contract amounts equal to or less than $500,000 unless an election is made to have the Department withhold ten percent (10%) of the contract amount.

The bonds shall be written by a surety or insurance company that is in good standing and currently licensed to write surety bonds in the State of Louisiana by the Louisiana Department of Insurance and also conform to the requirements of LSA-R.S. 48:255.

All signatures required on any paper "Bond Form" shall be original signatures, in ink, and are not to be mechanical reproductions or facsimiles.

103.06 EXECUTION AND APPROVAL OF CONTRACT. The contract, satisfactory bonds, proof of voluntary submission of escrowed bid preparation working papers or a statement that such papers will not be escrowed, proof of all required policies of insurance with minimum insurance coverages, proof of appropriate Louisiana contractor's license (if not required for bidding), and all other required contract documents shall be properly executed and returned to the Department within 15 calendar days after transmission to the bidder. If the contract is not executed by the Department within 20 calendar days following receipt of all required documents, the bidder shall have the right to withdraw his bid without penalty.

103.07 FAILURE TO EXECUTE CONTRACT. Failure by the bidder to comply with 103.06 will be cause for cancellation of the award and forfeiture of the proposal/bid guarantee, which shall become the property of the Department, not as a penalty, but in liquidation of damages sustained. For those projects wherein a proposal/bid guarantee was not provided with the bid, failure to comply with 103.06 will be cause for cancellation of the award and bidder to be disqualified from bidding or subcontracting for a period of one year from the award date. Awards, which were cancelled, may then be made to the next lowest responsible bidder or the work may be readvertised for bids, at the Department's discretion.

Should a proposal/bid guaranty be required to be forfeited by the bidder to the Department or other named obligee, and if for any reason the full amount of the proposal/bid guaranty is not collected or collectable by the Department upon demand, the bidder will be disqualified from bidding or subcontracting for a period of one year from the date of non-payment.

103.08 NOTICE TO PROCEED. The Department will issue the contractor a Notice to Proceed or a Conditional Notice to Proceed as soon as possible after award of the contract, and in no case will issue the contractor a Notice to Proceed or a Conditional Notice to Proceed later than 60 days after contract execution unless written consent of the contractor has first been obtained. If the Department has not issued the contractor a Notice to Proceed or a Conditional Notice to Proceed within 60 days of contract execution, and written consent of the contractor to extend this time period has not been obtained prior to its expiration, the contractor may demand cancellation of the contract.

After award of the contract, the project engineer will schedule a preconstruction conference. The preconstruction conference will be held prior to performing any work on the project, preferably during the assembly period, but not later than the first day of field operations. The project engineer will schedule the conference sufficiently in advance to permit the attendance of all parties concerned. The contractor is urged to have all subcontractors and major suppliers in attendance at the preconstruction conference.

Section 104
Scope of Work

104.01 INTENT OF CONTRACT. The intent of the contract is to provide for performance and completion of the described project. The contractor is obligated to complete the project in accordance with the contract documents.

The Scope of Work consists of, but is not limited to, the following:

i) all Work necessary to perform, construct, and complete the items described by the Contract, which may include extra work;

ii) all Work made necessary by an increase in the quantity of a major or minor pay item;

iii) all other Work incidental and necessary to perform, construct, and complete the Work specifically referenced or described by the Contract and necessary for delivery of a completed Project conforming to the Contract and suitable for its intended purpose;

iv) the performance of any testing as directed by the engineer to determine if any work or any finished product complies with the Contract, and;

v) except as provided in 105.03, to correct and/or replace deficient or nonconforming work, materials, or finished product at no additional cost or expense to the Department with work, materials, or finished product that does conform to the Contract.

To that end, the contractor shall furnish all labor, materials, equipment, tools, transportation, and supplies required to complete the work in accordance with best industry practices and the Contract, with the Contract taking precedence over industry practices. Performance methods and sequences are described in the contract documents when considered necessary for the successful completion of the project.

When an item in the contract contains a choice to be made by the contractor, the contractor shall indicate the choice to the engineer in writing.

When the project specifications reference or require the use of “manufacturer's recommendations or specifications”, the contractor shall provide the engineer with a current copy of these recommendations or specifications.

The contractor acknowledges, and expressly agrees, that this public works project is based on estimates of anticipated work; that changes in the

work, item quantities, planned work sequences, or methodology can be expected; that the contract does not guarantee any bid profit margin, any bid overhead recovery, or scope of work; and that payment, in accordance with 109.02, will be made only for fully completed work that is accepted, and for the materials incorporated therein.

As work on the Project progresses and in accordance with Section 109.05, the Department shall make partial payments of the Contract Price, as adjusted in accordance with the Contract. The Department shall adjust the Contract Amount as necessary to compensate the Contractor reasonably and fairly for any extra work ordered by the Engineer.

Subject to the Contractor's right to bring legal action against the Department, the Contractor shall deliver the project to the Department within the contract time as adjusted in accordance with the Contract.

104.02 ALTERATION OF THE CONTRACT. The Department reserves the right to order such alterations in quantities and plans, within the general scope of the contract, including alterations in grade and alignment, as deemed necessary or desirable in order to complete the work as contemplated. Pay items affected by such alterations shall be performed in accordance with the project specifications and payment will be made at the same unit prices as other parts of the work, except as provided in 109.03 and 109.04.

The Department reserves the right to order work not provided for in the contract whenever such extra work is found essential or desirable to satisfactory completion of the contract within its intended scope. Such extra work shall be performed in accordance with specifications and as directed. Payment for such extra work will be made as provided in 109.04. The Department reserves the right to order changes in details, including changes in materials, processes and sequences, whenever such changes are in the best interests of the public or are necessary or desirable to satisfactory completion of the work. Such changes in details shall be performed in accordance with the specifications and as directed, and payment will be made as provided in 109.04. Changes ordered in details, when such changes are allowed or required by the contract, are not alterations to the contract and payment for the affected work will be made at the contract unit prices.

An approved change order will be executed by the Department and the contractor to alter the contract in accordance with these and other similar provisions of the contract when any alteration is more than incidental, as determined by the Department, to other work specified in the contract. The

change order will describe the nature and scope of the contract alteration and the increase or decrease in the contract amount or time. Upon approval by the parties in Site Manager, or other Department approved contract management software, a change order is fully executed and a binding amendment to the contract. Additionally, the parties agree to thereafter execute a paper duplicate of the change order.

The adjustment in Contract Amount and/or Contract Time stated in a change order shall comprise the total price and/or time adjustment due or owed the contractor for the work or changes defined in the change order.

In the event the contractor refuses to execute a disputed change order, the Department reserves the right to execute a change order without the contractor's assent in order to document the contract alteration and adjust the contract amount and/or time accordingly.

Alterations to the contract as provided for by this subsection shall not invalidate the contract nor release the surety, and the contractor agrees to accept the work as altered, as if it had been part of the original contract. The contractor shall notify the surety of any alterations to the contract.

Alterations of the contract shall not involve work beyond the termini of the proposed work except as necessary to satisfactorily complete the project.

Contractor will be allowed to begin the work upon verbal approval of a change order, when such is given by the appropriate authority for each category of change order. Verbal approval shall be followed up in a written format via email, facsimile, or letter within seven days of given verbal direction. Force Account records, in accordance with 109.04, shall be maintained until a fully executed Change Order is completed, and then used to document incurred costs pursuant to LRS 48:252. In the event of a disputed change order, Contractor shall record and maintain records of all costs associated with any work alteration.

104.02.1 Differing Site Conditions:

1. During the progress of the work, if subsurface or latent physical conditions are encountered at the site that differ materially from those indicated in the contract, the party discovering such conditions shall immediately notify the other party in writing of the specific differing conditions before they are disturbed any further and before additional work is performed.

2. Upon written notification, the engineer will investigate the conditions and if he determines that the conditions do materially differ and will cause an increase or decrease in the cost or time required for the performance of any work under the contract, an adjustment, excluding loss of anticipated profits, will be made and the contract modified in writing

accordingly. The engineer will notify the contractor of his determination whether or not an adjustment of the contract is warranted.

3. No contract adjustment, which results in a benefit to the contractor, will be allowed unless the contractor has provided the required written notice.

104.02.2 Suspensions of Work Ordered by the Engineer:

1. If the performance of all or any portion of the work is suspended or delayed by the engineer in writing for an unreasonable period of time (not originally anticipated, customary or inherent to the construction industry) and the contractor believes that additional compensation and/or contract time is due as a result of such suspension or delay, the contractor shall submit to the engineer in writing a request for adjustment within 7 calendar days of receipt of the notice to resume work. The request shall set forth the reasons and support for such adjustment.

2. Upon receipt, the engineer will evaluate the contractor's request. If the engineer agrees that the cost and/or time required for the performance of the contract has increased as a result of such suspension and the suspension was caused by conditions beyond the control of and not the fault of the contractor, its suppliers, or subcontractors, and not caused by weather, the engineer will make an adjustment (excluding profit) and modify the contract in writing accordingly. The engineer will notify the contractor of his determination whether or not an adjustment of the contract is warranted.

3. No contract adjustment will be allowed unless the contractor has submitted the request for adjustment within the time prescribed.

4. No contract adjustment will be allowed under this clause to the extent that performance would have been suspended or delayed by any other cause, or for which an adjustment is provided for or excluded under any other term or condition of this contract.

104.02.3 Significant Changes in the Character of Work:

1. The engineer reserves the right to make, in writing, at any time during the work, such changes in quantities and such alterations in the work as are necessary to satisfactorily complete the project. Such changes in quantities and alterations shall not invalidate the contract nor release the surety, and the contractor agrees to perform the work as altered.

2. If the alterations or changes in quantities significantly change the character of the work under the contract, whether or not changed by any such different quantities or alterations, an adjustment, excluding loss of anticipated profits, will be made to the contract. The basis for the adjustment shall be agreed upon prior to the performance of the work. If a

basis cannot be agreed upon, then an adjustment will be made either for or against the contractor in such amount as the engineer may determine to be fair and equitable.

3. If the alterations or changes in quantities do not significantly change the character of the work to be performed under the contract, the altered work will be paid for as provided elsewhere in the contract.

4. The term "significant change" shall be construed to apply only to the following circumstances.

a. When the character of the work as altered differs materially in kind or nature from that involved or included in the original proposed construction or;

b. When a major item of work, as defined elsewhere in the contract, is increased, or decreased, in excess of 25 percent (25%) of the contract quantity as awarded. Any adjustment in unit price will be made on only that portion of the major item exceeding the 25 percent (25%) increase, or, in the case of a decrease of the item by 25 percent (25%) or more, the remaining portion will be adjusted.

104.02.4 Eliminated Items: Should any items or portion(s) thereof contained in the contract, whether bid as a unit price or as a lump sum, be found unnecessary for proper completion of the work, the engineer may, upon written order to the contractor, eliminate such items from the contract and deduct their total price from the contract amount through a change order. Such action shall not invalidate the contract.

When a portion of an item is eliminated or its quantity reduced, a deduction for the eliminated work will be made in the contract amount for that item as determined by the engineer. No allowance, except as provided herein, will be made for any increased expense, loss of expected reimbursement, or loss of anticipated profits claimed by the contractor resulting either directly from such elimination or indirectly from unbalanced allocation among the pay items of overhead expense by the contractor and the subsequent loss of expected reimbursements therefor, or for other reasons. When an item or portion thereof is eliminated, the contractor will be reimbursed for previously authorized work done toward completion of the item.

The change order authorizing reimbursements shall show how the reimbursements were derived. Except when otherwise authorized by the Chief Engineer, such derivation shall show breakdowns of costs as detailed in 109.04.3.1 through 109.04.3.7.

104.02.5 Extra Work: When necessary or desirable to complete the project, the engineer may direct the contractor to perform unforeseen work

for which there is no pay item or unit price in the contract by issuing, when appropriate, a Notice of Extra Work to the contractor. The Department will pay for such work as provided below through an approved change order.

Upon receipt of a directive or written Notice of Extra Work, the contractor agrees to perform the work as directed and provide the Engineer a written cost estimate in accordance with 109.04.

If the Engineer rejects the cost estimate provided by the contractor, the Department may:

1. Issue a directive requiring the contractor to proceed with the Extra Work and to document its costs in accordance with the provisions of 109.04.3; or
2. Advertise the Extra Work for bid in accordance with LRS Title 48.

104.03 MAINTENANCE OF TRAFFIC. The contractor shall provide for and maintain through and local traffic at all times and shall conduct his operations in such manner as to cause the least possible interference with traffic at junctions with roads, streets and driveways in accordance with Section 402, unless otherwise noted in plans or special provisions.

The contractor shall keep the portion of the project being used by public traffic, whether through or local traffic, in such condition that traffic (including mail delivery) will be adequately accommodated. The contractor shall furnish, erect and maintain barricades, warning signs and delineators, and shall provide flaggers and pilot cars in accordance with the plans and the MUTCD. The contractor shall maintain existing drainage and also provide and maintain in a safe condition all temporary approaches or crossings, intersections with roads, streets, businesses, parking lots, residences, garages and farms, at no direct pay.

When the engineer directs additional measures for the benefit of the traveling public, payment to the contractor will be made at the contract unit prices in the contract or as provided in 109.04. The engineer will be the judge of work to be classed as additional measures.

All lane closures, including ramps, shall be authorized by the engineer. Unless otherwise authorized, lane closures will only be allowed while work is being performed. The contractor shall provide the engineer a five calendar day notice, prior to any lane closure unless a shorter notification period is allowed by the engineer. A late lane opening rental will be charged to the contractor for any lane closure on any roadway or ramp that extends beyond the allowed closure times. The rental shall be computed in hourly increments only, with fractions of an hour rounded up to the next

whole hour. The rental will also apply to any unauthorized lane closures by the contractor, whether short term or long term. Any rental monies assessed for a late lane opening or for an unauthorized lane closure will be deducted from payments due the contractor. The late lane opening rental or unauthorized lane closure rental will be in accordance with Table 104-1 for a maximum of four continuous hours per instance.

Table 104-1
Unauthorized Lane Closure or Late Lane Opening Rental

Current Average Daily Traffic (Vehicles per Day) stated in contract documents	Hourly Rate ($/Hour)
<10,000	250
10,000 - 20,000	1,250
20,000 - 35,000	5,000
35,000 - 50,000	11,500
>50,000	15,000

104.04 FINAL CLEANING UP. Before final acceptance, the right-of-way, borrow and local material sources, and areas occupied by the contractor in connection with the work shall be cleaned of rubbish, excess materials, temporary structures, haul roads and equipment. All parts of the work, including property adjacent to the right-of-way, which have been damaged or rendered unsightly during the work shall be left in satisfactory condition and when required, the right-of-way shall be mowed in accordance with DOTD maintenance standards, all at no direct pay.

104.05 GUARANTEE AND WARRANTY OF CONTRACTOR'S WORK. By signing the contract the contractor guarantees and gives full warranty (1) of the quality of materials incorporated into the work, (2) that all work will be performed in a good and workmanlike manner, (3) that the finished product will be fit for its intended use and purpose and constructed in conformity with the Contract, and (4) that the contractor's work will be otherwise free of all defects.

For the purpose of this subsection, defect shall be understood to mean and to include all conditions or characteristics of the contractor's work not in conformity with the project plans and specifications including, without limitation, any nonconformity with the project plans and specifications that (1) renders the contractor's work inconsistent with applicable design standards, (2) that the contractor has not declared prior to Final

Acceptance, or (3) that the Department has not observed or detected in the course of Final Inspection. Defect shall be understood to exclude reasonably anticipated depreciation or deterioration of the contractor's work and all other conditions arising exclusively from the intended use of the finished product and not caused by a defect as defined in this paragraph.

At no direct pay and in accordance with the instruction of the engineer, the contractor shall remediate or replace any work which the Department determines to be defective during the guarantee and warranty term.

If it should be found that portions of the Project failed due to defective material or faulty workmanship and if such defective portions cause any breakdown or accident, the contractor will not only be required to furnish and install the replacement portion, but will also be held responsible to the Department for all expenses due to accident or breakdown caused by such a failure, including the repair or replacement of any other portion damaged by the failed portion, and/or the replacement of any other portion or equipment when such replacement is necessitated by the replacement of the portion which is the subject of the warranty.

The term of this guarantee and warranty is 3 years after final acceptance, except for National Highway System (NHS) projects. For NHS projects, the guarantee period and warranty term will be 1 year from final acceptance of the project.

This guarantee does not include an obligation by the contractor, or the department, to maintain the contractor's work during the guarantee and/or warranty period, or otherwise.

104.05.1 Equipment, Instruction Sheets: For the purpose of this subsection, equipment shall be understood to mean and to include all equipment, project component, apparatus, and/or all parts of such equipment (1) purchased or acquired by the contractor subject to an express warranty provided by the manufacturer of the equipment, and (2) installed by the contractor in accordance with project plans and specifications.

Instruction sheets that are required to be furnished by the manufacturer for installed project equipment, apparatus, materials, supplies, and operation shall be delivered by the contractor to the engineer prior to final acceptance of the project, with the following written warranties and guarantees:

1. Unless otherwise specified, the manufacturer's standard warranty for each piece of installed project equipment, project component, or apparatus furnished under the contract.

2. The contractor's guarantee that, during the guarantee period,

necessary repair or replacement of the warranted equipment, project component, or apparatus will be made by the contractor at no direct pay.

3. The contractor's guarantee for satisfactory operation of installed project equipment including, but not limited to, the mechanical and electrical systems furnished and constructed under the contract for the guarantee period.

To extent possible, contractor shall acquire all such warranties in the name of and for the benefit of contractor and the Department. Otherwise, Contractor shall assign and subrogate all of contractor’s rights under all express warranties of such equipment or project components, or parts of thereof, to the Department and deliver such to the Department before acceptance of the work.

The term of the warranty or guarantee period shall commence upon the final acceptance date of the project. If it should be found that parts or portions of equipment failed due to defective material or faulty workmanship and if such parts should, within the manufacturer's warranty period, cause any breakdown or accident, the contractor, during the term of its guarantee period, will not only be required to furnish and install the replacement part, but will also be held responsible to the Department for all expenses due to accident or breakdown caused by such a failure, including the repair or replacement of any other equipment damaged by the failed equipment, and/or the replacement of any other equipment when such replacement is necessitated by the replacement of the equipment or part which is the subject of the warranty.

The contractor shall insert one copy of all warranties and guarantees into the maintenance manuals specified. Routine maintenance during the guarantee period will be performed by the Department.

Section 105
Control of Work

105.01 AUTHORITY OF THE ENGINEER. The engineer, acting directly or through duly authorized representatives in accordance with 105.09, will decide all questions which arise as to quality and acceptability of materials furnished and work performed, rate of progress of the work, interpretation of plans and specifications, and acceptable fulfillment of the contract by the contractor.

The engineer will have the authority to suspend the work wholly or in part due to failure of the contractor to correct conditions unsafe for workmen or the general public; for failure to carry out provisions of the contract; for failure to carry out orders; for such periods as deemed necessary due to unsuitable weather; for conditions considered unsuitable for prosecution of the work; or for other conditions or reasons deemed to be in the public interest.

Orders to suspend the work will be in writing and will include the reasons for the suspension. The order to resume work will also be in writing.

The Chief Engineer has the authority to suspend the work if, at any time, the required policies of insurance become unsatisfactory to the Department, as to form or substance, or if a company that has issued any policies becomes unsatisfactory to the Department.

When work is suspended due to acts, failures to act, or omissions of the contractor, all delays resulting therefrom shall be non-excusable delays and noncompensable.

105.02 PLANS AND SUBMITTALS. Conform to 801.05.2 for format of plans, and submittals.

Maintain a copy of all plans and submittals at the job site throughout the duration of the contract.

105.02.1 Plans: The contractor will be furnished, without charge, a maximum of five sets of half-scale plans, unless full-scale plans are requested. Plans will show lines, grades, typical cross sections, location and details of structures, and a summary of pay items. Only general features will be shown for steel bridges.

Standard plans required for the work, but included only by reference,

will be furnished free of charge to the contractor upon request.

105.02.2 Submittals: A submittal consists of a transmittal letter and required submittal contents. The transmittal letter shall include the state project number, project name, route, parish, transmittal date, and the submitter's name and address. Unless otherwise specified, transmit submittals to the Project Engineer for review or record as provided below. Copy the Project Engineer on all submittals transmitted to other specified recipients.

Submittal contents include working drawings and documents necessary to adequately control the work and fulfill contract requirements. The cost of producing, transmitting, and revising submittals shall be included in and incidental to their respective pay items.

A submittal shall show clearly and explicitly that its objective complies with the contract documents and applicable codes. Vague, imprecise, or ambiguous submittals will be returned for re-submission. The Department may return the submittal for correction or additional information. Failure to explicitly identify in submittals contract and/or code deviations may result in rejection and replacement of subsequent work at no cost to the Department.

Submittals do not alter, modify, or revise contract documents. The acceptance by the engineer of submittals will be subject to satisfactory installation and execution of its objective. Submittal acceptance will not relieve the contractor of responsibility under the contract for successful completion of the work or responsibility for compliance with the terms and conditions of the contract.

Submittals shall be made in accordance with the following, unless specified elsewhere.

105.02.2.1 Submittal Processes: Submittals will either be for record or review.

105.02.2.1.1 Submittal for Record: The Department reserves the right to comment on submittals for record, but otherwise work may proceed on corresponding work once the submittal is received by the engineer.

105.02.2.1.2 Submittal for Review: Do not fabricate, install or purchase an item, or perform corresponding work prior to receiving submittal acceptance and any specified document distribution is complete.

Submittal for review will be stamped either "Returned for Correction" or "Accepted in accordance with LSSRB 105.02," initialed and dated by the reviewer, and returned to the contractor by the Project Engineer.

a) Returned for Correction: A submittal stamped "Returned for Correction" has been rejected by the Department due to non-conformance with the contract, proposed unequal item substitution, perceived installation conflicts, missing information, or other deficiency.

b) Acceptance: A submittal stamped "Accepted in accordance with LSSRB 105.02" indicates that, at the time of review, the Department has not identified a reason to reject the submittal.

105.02.2.1.3 Review Periods: For bidding purposes, unless specified otherwise, allow a minimum of 14 calendar days per submittal or resubmittal. Review periods for separate submittals are not concurrent.

Portions of a submittal marked "Returned for Correction" will receive a new review period upon re-submittal.

Submittal review for manufactured items will not begin until all interdependent items have been submitted except as described herein.

Submittals for mechanical, electrical, or facility items that must be ordered early due to long delivery time may, with the approval of the Project Engineer, be submitted for review without associated assembly or working drawings, or other items that are interdependent with the long lead time item. Assembly or working drawings that contain long lead time items, and other submittals for interdependent items shall still be prepared and submitted for review in a timely manner.

105.03 CONFORMITY WITH PLANS AND SPECIFICATIONS.

105.03.1 Conformity Obligation: All work and materials shall conform to the lines, grades, cross sections, dimensions, material and all other requirements of the contract.

By signing the Contract, the contractor expressly affirms its understanding of the requirements of the contract, and agrees that it shall be obligated to complete the project in accordance with those requirements.

105.03.2 Reasonably Acceptable Work: When the engineer finds the materials furnished, work performed, or the finished product not in compliance with the contract but that reasonably acceptable work has been produced, the engineer will determine to what extent the work will be accepted and remain in place. If accepted, the engineer will document the basis of acceptance by change order and/or special agreement. The change order and/or special agreement will contain appropriate documentation for an adjustment in the contract price for the work, materials, associated costs, or value of the deficient work as necessary to support the engineer's determination. Reduced pay schedules will be used when such schedules are a part of the project specifications.

105.03.3 Nonconforming Work: If the engineer finds the materials, work performed, or the finished product not in compliance with the contract and have resulted in an unsatisfactory or unacceptable product, the work or materials shall be removed and replaced at no direct pay. When directed, the Contractor shall preserve the removed work or materials at the project site, at no direct pay, pending disposal directions from the engineer. Other corrective actions submitted by the contractor will be considered by the engineer and if accepted, will be performed by the contractor at no direct pay.

If due to the contractor's negligence or selected method of operation in performing the work, the engineer deems it necessary to make changes, the contractor will be liable for the additional cost to the Department, including, but not limited to, the cost of consulting engineers or inspectors. The amount thus determined will be deducted from payments for the work. The contractor and its surety shall be solidarily liable for any expense incurred by the Department pursuant to this provision in excess of any remaining amounts due the contractor under the contract.

105.04 COORDINATION AND PRECEDENCE OF CONTRACT DOCUMENTS. These specifications, the supplemental specifications, the plans, special provisions and supplementary documents are essential parts of the contract. A requirement occurring in one is as binding as though occurring in all. They are intended to be complementary and to describe and provide for a complete work.

In case of discrepancy, the following order of precedence will apply:

1. Special Provisions
2. Plans
3. Supplemental Specifications
4. Standard Specifications
5. Standard Plans

Calculated dimensions will govern over scaled dimensions.

The contractor shall take no advantage of any error or omission in the plans or project specifications. If the contractor discovers such an error or omission, he shall immediately notify the engineer. The engineer will then make such corrections and interpretations as deemed necessary to fulfill the intent of the plans and project specifications.

105.05 COOPERATION BY CONTRACTOR. The contractor shall keep one complete set of plans and other contract documents available at the work site.

The contractor shall give the work the constant attention necessary to facilitate the progress thereof, and shall cooperate with the engineer, inspectors, and other contractors.

The contractor shall have on the work site at all times, as the contractor's agent, a competent representative capable of reading and understanding the plans and project specifications and experienced in the type of work being performed, who shall receive and execute directions from the engineer. At the preconstruction conference or upon request, the contractor shall furnish the engineer written notice of the name and telephone numbers of the representative. The representative shall have authority to execute orders or directions of the engineer without delay and to promptly supply such materials, equipment, tools, labor, and incidentals as required. The representative shall be furnished regardless of the amount of work sublet.

The contractor shall furnish the Department the authorized signature list with the names of persons authorized to sign for him in matters pertaining to change orders, force account or extra work, contract time charges and other documents. No work shall commence on the project until the contractor has complied with this requirement. A revised authorized signature list shall also be furnished when a person so designated is removed and replaced.

105.06 COOPERATION WITH UTILITIES. The Department will notify all known utility companies, pipeline owners or other parties affected by the work and endeavor to have the necessary adjustments of public or private utility fixtures, pipelines and other appurtenances within or adjacent to the limits of construction made as soon as possible.

Upon award of the contract, utility companies affected will be advised by the Department of the name and address of the contractor, approximate date work will begin, and other pertinent information.

Except as hereinafter provided, and regardless of whether the utility is shown on the plans or referred to in the project specifications, all water lines, gas lines, wire lines, fiber optic cables, telephone lines, cable television lines, service connections, water and gas valve boxes, light standards, cableways, signals, and other utility appurtenances within construction limits which prevent completion of the contractor's work will be relocated or adjusted by the owners at no expense to the contractor. The contract will indicate utility items to be relocated, adjusted or constructed by the contractor.

Where a utility crosses or otherwise occupies an area within

construction limits of the project and the utility will not have the Department's required clearance when the work is completed, it shall be the Department's responsibility to arrange for necessary relocation to the required clearance. When the required clearance will exist when the work is completed, but relocation is considered necessary by the contractor for construction purposes, the contractor shall make arrangements with the owner for any relocation or adjustment necessary to the operations at no direct pay. In such cases, upon completion of the work and prior to final acceptance, the final location of the utility will be acceptable to the Department. Nothing herein shall be interpreted to mean that the Department waives its rights to control entrance onto, or location on, its right-of-way of any utility or appurtenance.

When the engineer determines that the contractor is experiencing significant delays in the controlling items of work because of delays by others in removing, relocating or adjusting utility appurtenances, contract time extensions shall be considered for such delays in accordance with 108.07. On the date stipulated in the Notice to Proceed, the contractor shall begin work in connection with fencing, clearing, grubbing, removal of structures and obstructions, and relocation and demolishing of other structures, provide layout as needed, and shall prosecute such work to completion to avoid delays in removal or adjustment of utilities. The contractor shall cooperate with the utility companies to avoid delays in completion of work.

When the contractor's work involves excavating or underground demolition activity, the contractor is required to reach Louisiana One Call, prior to starting any work, in order to comply with the Louisiana Underground Utilities and Facilities Damage Prevention Law.

105.07 COOPERATION BETWEEN CONTRACTORS. The Department reserves the right to contract for and perform additional work on or near the work covered by the contract.

When separate contracts are let within, adjoining, or adjacent to the limits of the project, each contractor shall conduct the work not to hinder the progress of work by other contractors and shall cooperate with each other as directed by the engineer. When a contract is let within, adjoining, or adjacent to the limits of existing project(s), the existing project(s) schedule of work takes precedence over the subsequent project.

The contractor shall arrange the work and shall place and dispose of materials being used not to interfere with the operation of other contractors within, adjoining, or adjacent to the limits of the project. The contractor

shall acceptably join the work with that of other contractors and shall perform the work in proper sequence to that of the others and without causing disruption or delay to the schedule of project completion.

The contractor shall assume all liability, financial or otherwise, in connection with the contract and shall hold the Department harmless and indemnify the Department from all damages or claims that may arise because of inconvenience, delay, or loss experienced by the contractor or caused to other contractors due to the presence and operations of other contractors working within, adjoining or adjacent to the limits of the projects.

105.08 CONSTRUCTION STAKES, LINES AND GRADES. The contractor shall set construction stakes establishing lines and continuous profile grade in road work, and centerline and bench marks for bridge work, culvert work, protective and accessory structures and appurtenances. The engineer will furnish the contractor all necessary information relating to lines, slopes and grades. These stakes and marks shall constitute the field control by and in accordance with which the contractor shall establish other necessary controls and perform the work.

The contractor shall be responsible for preservation of all stakes and marks. When any construction stakes or marks have been carelessly or willfully destroyed or disturbed by the contractor, the cost of replacing same will be at no direct pay.

105.09 AUTHORITY AND DUTIES OF PROJECT ENGINEER. As the direct representative of the Chief Engineer, the Project Engineer has immediate charge of the Department's engineering details of the construction project. The Project Engineer is responsible for administration of the contract. The Project Engineer shall have authority to give directions pertaining to the work in the interest of the public, to reject defective work, materials, and equipment, and to suspend work in accordance with 105.01.

Except as permitted and instructed by the Chief Engineer, the Project Engineer is not authorized to alter or waive provisions of the contract, alter quantities, order extra and force account work, or accept any portion of the project. In no case will the Project Engineer perform any duties for or act as the representative of the contractor.

When the work is being done by force account, the contractor shall have the responsibility to supervise the work and provide a product meeting the requirements of the contract. The Project Engineer, for force account only, shall have the authority to require the contractor to revise operations,

including but not limited to, sequence and location of work; number, category and caliber of workers; number and type of equipment; and hours of work.

105.10 DUTIES OF THE INSPECTOR. Inspectors representing the Department are authorized to inspect all work. Such inspection extends to any part of the work and to preparation, fabrication or manufacture of materials to be used. The inspector is not authorized to alter or waive contract provisions. The inspector is not authorized to issue instructions contrary to the contract; however, the inspector will have authority to reject work or materials until any question can be referred to and decided by the engineer. In no case will the inspector perform any duties for, or act as the representative of the contractor.

105.11 INSPECTION OF WORK. All materials and each part or detail of the work shall be subject to inspection by the engineer. The engineer shall be allowed safe and convenient access to all parts of the work, including fabrication facilities, and shall be furnished with such information and assistance by the contractor as required to make a complete inspection. Such inspection will not relieve the contractor from the obligation to furnish acceptable materials or to perform all work in accordance with the contract.

If ordered by the engineer, the contractor, at any time before acceptance of the work, shall remove or uncover such portions of the finished work as directed. After examination, the contractor shall restore said portions of the work to the standard required by the project specifications. Should the work thus exposed prove acceptable, the uncovering or removing, and the replacing of the covering or making good of the parts removed will be paid for as extra work; but, should the work so exposed prove unacceptable, the uncovering or removing, any testing of the work, and the replacing of the covering or making good of the parts removed will be at no direct pay. Force account records shall be kept to document possible reimbursement.

Work done or materials used without supervision or inspection by an authorized Department representative, and/or when the Department is not provided a minimum forty-eight hour notice or opportunity to provide inspection, may be ordered uncovered for examination and/or testing, and recovered, or removed and replaced, all at no expense to the Department.

When a unit of government or political subdivision or other public or private entity is to pay a portion of the cost of the work covered by the contract, its representatives shall have the right to inspect the work. Such

inspection shall not make any unit of government, political subdivision, or corporation a party to the contract and shall not interfere with the rights of either party thereunder.

105.12 INSPECTOR'S STAMP FOR SHIPMENT.

105.12.1 Approval for Shipment: When materials requiring shop or plant inspection are ready for shipment, the Department's inspector or representative shall affix the stamp of the Department. Concrete girders, piles, and major structural members are stamped. For other minor members or items, the shipping list or manifest will be stamped.

Application of the inspector's stamp implies that at the time of stamping it was the opinion of the inspector that the product was fabricated or manufactured from accepted materials by approved processes and painted, if required, in accordance with the contract. Application of the inspector's stamp for shipment does not imply that the products will not be rejected by the Department if subsequently found to be defective. Application of the inspector’s stamp does not transfer risk of loss of the fabricated material to the Department.

105.12.2 Rejection: The inspector will reject material and workmanship that do not conform to the contract.

Stamping of products by Department representatives shall not preclude further testing and inspection by the Department.

Defective materials and workmanship, whenever discovered, will be rejected and shall be repaired or replaced at no direct pay. All repair procedures shall be subject to acceptance by the Department.

105.12.3 Shipment of Material Not Stamped: Materials and fabricated items subjected to shop inspection will not be accepted at the project site if they do not bear the inspector's stamp for shipment. If the products are not stamped because they were not offered for shop inspection, or were shipped after rejection at the shop, the products shall be returned to the shop for inspection and correction as necessary.

In lieu of this requirement, the Department may allow inspection to be performed at the project site at no expense to the Department.

105.13 REMOVAL OF UNACCEPTABLE AND UNAUTHORIZED WORK. Work not conforming to the contract will be considered unacceptable, unless otherwise determined acceptable under the provisions in 105.03. The engineer may require testing of any work to determine if such work is acceptable. The engineer shall determine the nature and extent of the tests, which shall be paid in accordance with 105.11.

Unacceptable work found to exist prior to final acceptance of the work shall be removed and acceptably replaced, or repaired to the Department's satisfaction.

No work shall be done without lines and grades having been given by the engineer, except that work which is specified as construction layout. No payment will be made for work done contrary to instructions of the engineer, work done beyond lines shown on the plans or as given, or extra work done without authority. Work so done may be ordered removed or replaced at no expense to the Department.

Upon failure of the contractor to comply with any order of the engineer made under the provisions of this subsection, the engineer will have authority to cause unacceptable work to be remedied, or removed and replaced, or have unacceptable work to be remedied, or removed and replaced by a third party, and to deduct the costs therefrom from payments to the contractor. The contractor and its surety shall be solidarily liable for any expense incurred by the Department pursuant to this provision in excess of any remaining amounts due the contractor under the contract.

105.14 LOAD RESTRICTIONS. The contractor, subcontractors, or their suppliers shall observe all road and bridge legal load restrictions when hauling equipment or materials on public roads beyond project limits. A special permit does not decrease the contractor's liability for damage. Except for equipment specified in the contract, contractor shall obtain the engineer's written permission to exceed legal load limits within the project limits. Operating equipment or hauling loads that may damage structures, roadway, or any construction is prohibited.

The Department may require the Contractor to provide, for structures within the project limits short-term load impacts to facilitate the permitting of highway traffic, and/or a complete structural impact analysis prepared by a professional civil engineer registered in Louisiana to verify that the existing structure and/or foundation can withstand any dead, live, and wind loads imposed without causing overstress, or compromising the structural integrity of the structure and/or foundation. In any such analysis, live loads on structures and/or foundations shall include Louisiana legal highway loads or special permitted loads as given by the Department/project documents.

The contractor may be required to provide a structural analysis, if the contractor's operations, equipment or material loading, could compromise the structural integrity of the structure and/or foundation. In these cases the costs of the analysis shall be at the contractor's expense. This evaluation

shall include loading from traffic, as indicated in the contract, on the bridge, construction loads, and the dead loading of the bridge.

In the event the Department asks for a structural analysis due to a permitted load above that which is outlined in the contract to be expected, the costs of the analysis shall be at the Department's expense.

105.15 MAINTENANCE DURING CONSTRUCTION. The contractor shall satisfactorily maintain the entire area within the project, from the effective date of the Notice to Proceed until the date of final acceptance. This maintenance responsibility includes, but is not necessarily limited to, maintaining drainage, periodic mowing (not to exceed four times per calendar year) and removing of debris and remains, to the satisfaction of the engineer, as well as such striping, patching and shoulder maintenance which will provide safe and convenient conditions at all times for the public. The contractor shall continuously and effectively satisfy his maintenance responsibilities with such equipment and forces as may be necessary to maintain a safe and satisfactory condition for the duration of the project.

The contractor shall maintain the roadway in accordance with Section 402 and in a satisfactory condition to allow traffic to safely travel through the work zone at the posted speed limit.

Adjacent and parallel roadways within the project limits, not affected by construction shall not be the maintenance responsibility of the contractor.

105.16 FAILURE TO MAINTAIN ROADWAY OR STRUCTURE. If the contractor fails to comply with 104.03, 104.04, 105.15, the provisions of Section 107, or fails to perform any work for which the contractor is responsible that necessitates correction, the engineer will notify the contractor in writing of such noncompliance. In writing, the contractor will acknowledge receipt of said notice and will advise when the correction will be made.

If the contractor fails to remedy a deficient condition involving traffic or site maintenance within 24 hours after receipt of the written notice, or within a reasonable amount of time for other noncompliance conditions, the Department will have the option to immediately remedy the condition with its own in-house forces or by another contractor, and the cost thereof will be deducted from payments for the work.

When the condition requires more immediate remedy due to hazard to life, health, or property, the engineer may immediately remedy the condition as above and the costs thereof will be deducted from payments for the work.

The contractor and its surety shall be solidarily liable for any expense incurred by the Department pursuant to this provision in excess of any remaining amounts due the contractor under the contract.

105.17 ACCEPTANCE.

105.17.1 Partial Acceptance: When the contractor satisfactorily completes a portion of the project that can be used advantageously for traffic or other use, the contractor may request the engineer to make final inspection of that portion. When the engineer finds upon inspection that the portion has been completed in compliance with the contract, the engineer may accept that portion as being completed and the contractor will be relieved of further responsibility for that portion and from further liability to the public.

Partial acceptance of a project will not be made until the portion being accepted has been completed in its entirety, including all safety devices, signs and striping. When partial acceptance is made, the terms of acceptance, including the responsibilities of all parties and any allowance of additional contract time, shall be set forth in a change order, mutually agreed to by the engineer and the contractor. Such partial acceptance shall not void or alter any terms of the contract, except as set forth in the change order.

105.17.2 Final Acceptance: Upon notice from the contractor of presumptive completion of the entire project, the engineer will make an inspection. When the inspection discloses any work as being unsatisfactory, the engineer will give the contractor instructions for correction of same. The contractor shall immediately comply with such instructions. If contract time is stopped by the engineer, all corrections shall be completed within 30 calendar days or contract time will resume along with any additional stipulated damages. Upon correction of the work, another inspection will be made which will constitute final inspection provided the work has been satisfactorily completed. In such event, the engineer will notify the contractor in writing of the acceptance.

When all the work provided for in the contract is found satisfactorily completed, that inspection will constitute the final inspection. The Project Engineer will recommend final acceptance to the Chief Engineer. Upon final acceptance by the Chief Engineer, the contractor will be notified in writing.

105.18 CLAIMS FOR ADDITIONAL COMPENSATION. If the contractor deems additional compensation is due for work, material, delays, inefficiencies, disruptions or other additional costs or expenses reportedly not covered in the contract or not ordered as extra work, the contractor shall notify the engineer in writing of his intention to make a claim for such additional compensation before beginning the work on which the claim is based or immediately upon encountering the conditions or effects which the contractor claims entitle him to additional compensation. Notification of a claim shall conform to the requirements of EDSM III.1.1.28. Notification must be timely given. The engineer must be afforded a reasonable opportunity and proper facilities by the contractor for keeping account of actual costs incurred by the contractor related to the claim. However, such notice by the contractor and the fact that the engineer has kept account of the costs as aforesaid shall not be construed as proving or substantiating the validity of any claim. Within thirty calendar days after the completion of the event that caused the claim, contractor must submit its sworn Request for Additional Compensation in accordance with the requirements of EDSM III.1.1.28.

If notification and a Request for Additional Compensation is not given or the engineer is not afforded proper facilities by the contractor for keeping an account of actual costs incurred by the contractor, the contractor hereby agrees and shall waive any claim for such additional compensation. If the claim, after consideration by the Chief Engineer, or judicial determination, is found to be just, payment will be made as specified in 109.04, by force account or negotiated price. Nothing in this subsection shall be construed as establishing any claim contrary to 104.02.

105.19 BIDDER INQUIRIES, CONTRACTOR REQUESTS AND PROPOSALS. Prior to bid, bidders may submit questions seeking clarification of the construction proposal, specifications, or project plans through Falcon. After award of the contract, the contractor may submit to the engineer requests and proposals as provided below.

105.19.1 Bidder Inquiries: Submit questions seeking clarification of the construction proposal, specifications, or project plans via Falcon. Questions answered will be posted for viewing by all prospective bidders. Questions determined by the Department to be submitted untimely, or less than forty eight hours prior to Bid, may not be answered. In addition, the Department reserves the right to not post any unsuitable question or any statement of fact or opinion not made for the purpose of seeking clarification of plans and/or project specifications.

105.19.2 Requests for Information (RFI): RFI submittals are written communication tools used to request clarification of plans and specifications after contract award. Number RFIs sequentially and submit them on forms provided by the Department's Construction Section. There will be no cost to the contractor for any Department expense related thereto when an RFI pertains to clarification of plans or specifications. Reputed RFIs found by the Department as not pertaining to plan or specification clarification will be returned to the contractor for resubmission as a VE or Contractor Proposal.

105.19.3 Value Engineering (VE) Proposals: After award of the contract, the contractor will be permitted to submit to the engineer written VE Proposals for modifying the plans, specifications, or other requirements of the contract for the purpose of reducing the total cost of construction.

This process serves to share with the contractor only the construction cost savings generated on this contract as a result of a VE Proposal(s) offered by the contractor and approved by the Department. The provisions of this subsection shall not, however, be construed to require the Department to consider any VE Proposal which may be submitted. The Department reserves the right to reject any and all VE Proposals at any time in the process.

Any time savings resulting from a VE Proposal will be considered at the completion of the project as an incentive to the contractor, provided the contract contains an incentive clause for early completion of the work and the contractor has not met the incentive limit in the contract. A time only reduction will not be considered as a VE Proposal. The purpose is to encourage the use of the contractor's ingenuity and experience in arriving at alternative construction methods, which will reduce the overall construction cost.

The VE Proposal shall satisfy all design criteria and not impair, in any manner, the essential functions and characteristics of the project as determined by the Department.

The VE Proposal shall be specifically identified by the contractor as a cost reduction proposal. VE Proposals will be considered by the Department in the same manner as change orders.

Submit a written conceptual VE Proposal to the Project Engineer. The Project Engineer will disseminate this proposal to the appropriate parties within the Department for determining its potential acceptability.

The conceptual VE Proposal shall provide the following minimum information:

1. A description of the proposal.

2. A listing of work and pay items affected, added, or eliminated by the proposed change, including any change in contract time and/or traffic maintenance.

3. An initial estimate of the net construction cost savings which the change is expected to generate, including elimination of any planned work.

The contractor may proceed to the formal VE Proposal upon the Department's acceptance of the conceptual VE Proposal. The Department is not obligated to approve the contractor's formal VE Proposal, even if the conceptual VE Proposal is initially considered acceptable.

As a minimum, the following information shall be submitted by the contractor with the formal VE Proposal.

1. A statement that the proposal is submitted as a VE Proposal.

2. A description of the difference between the existing contract requirements and the proposed change(s), and the comparative advantages and disadvantages of each, including effects on service life, economy of operations, ease of maintenance, desired appearance, necessary standardized features, reliability, traffic flow during construction, safety, and contract time.

3. Revised contract plan sheets, specifications, and engineering calculations, all sealed, signed and dated by a professional engineer licensed to practice in the State of Louisiana.

4. Detailed estimates of the cost to the Department for performing the work under the existing contract and under the VE Proposal, including a listing of contract items affected by the proposal, and quantity variations attributable thereto with the related costs.

5. An assessment of any effects that adoption of the VE Proposal could have on other costs to the Department, including future maintenance and operation.

6. A statement of the latest time or date that the VE Proposal must be executed in order to obtain the maximum cost reduction and the reasoning for this time schedule.

7. A statement of the effect that adoption of the VE Proposal will have on the time for completion of the contract.

8. A description of any previous use or testing of the final VE Proposal on another Department project or elsewhere and the conditions and results therewith. If the final VE Proposal was previously submitted on another Department project, indicate the date, the project, and the action taken by the Department.

The proposal execution date submitted by the contractor must allow the

Department time for review and processing of a change order. Should the Department find insufficient time is available for review and processing, it may reject the VE Proposal on such basis. If the Department fails to respond to the VE Proposal by the date or time specified, the contractor shall consider the proposal rejected, and shall have no claim against the Department.

Proposed changes in basic configuration and design of a bridge, hydraulic capacity of drainage facilities, typical roadway section, type or minimum thickness of pavements, or changes in grade or alignment which do not meet the geometric standards of the project as conceived, will not be considered as acceptable VE Proposals. Typically, changes in materials for roadway sections will also not be considered as acceptable VE proposals. Plan errors which are identified by the contractor and result in a cost reduction will not qualify as a VE Proposal. If the Department is already considering certain revisions to the contract or has approved certain changes in the contract for general use, which are subsequently incorporated in a VE Proposal, the Department will reject the contractor's proposal and may proceed without obligation to the contractor. The Department will not be liable to the contractor for failure to act upon or accept any VE Proposal nor for any delays to the work attributable to any such proposal. The contractor may withdraw, in whole or in part, any VE Proposal not accepted by the Department within the period specified in the proposal. The decision of the Department as to the acceptance or rejection of VE Proposals shall be final and shall not be subject to the provisions of 105.18.

The contractor will be notified in writing of the Department's decision to accept or reject each VE Proposal submitted under these provisions. If a VE Proposal is accepted, the necessary contract modifications will be implemented by execution of a change order, which will provide for equitable price adjustments giving the contractor and the Department equal shares in the resulting net savings. Until a VE Proposal is affected by such contract modification, the contractor shall perform the work in accordance with the terms of the existing contract.

The net cost savings to be shared shall be determined as the difference in costs between the original contract costs for the involved work items and the actual final costs to the Department occurring as a result of the proposed change. Only those work items directly affected by the change order will be considered in making the final determination of net cost savings. Subsequent change orders affecting the modified work items but not related to the VE Proposal, will be excluded from such determination.

In reviewing the VE Proposal, the Department reserves the right to reject the proposal if, in its judgment, the proposed net cost savings do not represent a reasonable measure of the value of the work to be performed or deleted.

All costs incurred by the contractor in developing the VE Proposal shall be borne by the contractor. These costs include, but are not limited to, all expenses to prepare the VE Proposal, the engineering costs, including the Department's review cost, cost of printing and copying any revised plan sheets, delivery costs, and any other cost as determined by the engineer to be required for proper justification of the VE Proposal.

The change order implementing the necessary contract modifications shall include a pay item for and a lump sum estimate of the approximate net cost savings anticipated as a result of the VE Proposal, and a proportionate amount thereof shall be included in partial payment estimates as the work on the modified contract items is performed. The contractor's 50 percent share of the net cost savings shall constitute full compensation for implementing all changes pursuant to the agreement. Any time savings for early completion of the project resulting from the VE Proposal will be considered upon completion of the project as an incentive to the contractor provided the contract contains an incentive clause for early completion of the work and the contractor has not met the incentive limit in the contract.

The Department reserves the right to include in the agreement any conditions it deems appropriate for consideration, approval, and implementation of the VE Proposal. The Department also reserves the right to require the contractor to share in or reimburse the Department's costs of investigating a VE Proposal submitted by the contractor as a condition of considering such proposal. The Department will have the option to perform the investigation in-house or by consultants. When such a condition is imposed, the contractor shall indicate his acceptance in writing, and such acceptance shall constitute full authority for the Department to deduct amounts payable to the Department from any monies due or that may become due to the contractor under the contract.

The Department reserves the right to adopt a VE Proposal for general use when it determines that said proposal is suitable for application to other contracts. When an accepted VE Proposal is adopted for general use, only the contractor who first submitted such proposal will be eligible for compensation pursuant to this subsection, and in that case, only as to those contracts awarded to him prior to submission of the accepted proposal. VE Proposals identical or similar to previously submitted proposals will be eligible for consideration and compensation under these provisions if the

identical or similar previously submitted proposals were not adopted for general application to other Department contracts. Subject to the provisions contained herein, the State or any other public agency shall have the right to use all or any part of any submitted VE Proposal without obligation or compensation of any kind to the contractor.

Any changed conditions arising as a result of the acceptance of a VE Proposal will not be considered as the basis for any claim for additional compensation.

105.19.4 Contractor Proposals: This provision is to modify the contract as a result of a Contractor Proposal(s) offered by the contractor and accepted by the Department. No modification will be permitted which alters the nature of the project or which is not an integral part of the project objective. Contractor Proposal(s) may decrease or increase construction cost. In the case of a decrease in construction cost, the Department will modify the contract to decrease the construction cost in accordance with the proposal. In the case of an increase in construction cost, the Department will either modify the contract to increase the construction cost or require the contractor to complete the contract at the contract bid prices. The Department reserves the right to reject a Contractor Proposal at any time during the submittal and review process.

Proposed changes in typical roadway section, type, minimum thickness of pavements, or changes in grade or alignment, which do not meet the geometric standards of the project as designed, will not be considered as acceptable Contractor Proposals. Typically, changes in materials for roadway sections will not be considered as acceptable Contractor Proposals.

The Contractor Proposal shall satisfy all design criteria and not impair the essential functions and characteristics of the project, as determined by the Department.

Submit a written conceptual Contractor Proposal to the Department for determining potential acceptability. Provide the following conceptual Contractor Proposal information at a minimum:

1. A description of the proposal.
2. A description of the difference between the existing contract requirements and the proposed change(s), and the comparative advantages and disadvantages of each, including effects on service life, economy of operations, ease of maintenance, desired appearance, necessary standardized features, reliability, traffic flow during construction, safety, and contract time.
3. A listing of work items and pay items affected, added, or

eliminated by the proposed change, including any change in contract time and/or traffic maintenance.

4. An initial estimate of the construction cost decrease or increase resulting from the proposed Contract modifications.

Upon Department written notification that the conceptual Contractor Proposal indicates proposal acceptability, develop and submit a written formal Contractor Proposal. The Department is not obligated to accept the formal Contractor Proposal, even if the conceptual Contractor Proposal indicates proposal acceptability.

Provide the following formal Contractor Proposal information as a minimum:

1. A statement that the proposal is submitted as a Contractor Proposal.

2. A description of the difference between the existing contract requirements and the proposed change(s), and the comparative advantages and disadvantages of each, including effects on service life, economy of operations, ease of maintenance, desired appearance, necessary standardized features, reliability, traffic flow during construction, safety, contract time, and other factors as appropriate.

3. Revised contract plan sheets, specifications, and engineering calculations, all sealed, signed and dated by a professional engineer licensed to practice in the State of Louisiana.

4. Detailed estimates of the cost to the Department for performing the work under the existing contract and under the Contractor Proposal, including a listing of contract items affected by the proposal and quantity variations attributable thereto with the related costs. Describe new contract items that are required.

5. An assessment of any effects that adoption of the Contractor Proposal could have on other costs to the Department, including future maintenance and operation.

6. A statement of the latest time or date that the Contractor Proposal must be executed and the reasoning for this time schedule.

7. A statement of the effect that adoption of the Contractor Proposal will have on the time for completion of the contract.

8. A description of any previous use or testing of the final Contractor Proposal on another Department project or elsewhere and the conditions and results therewith. If the final Contractor Proposal was previously submitted on another Department project, indicate the date, the project, and the action taken by the Department.

The proposal execution date submitted by the contractor must allow the

Department time for review and processing of a change order. Should the Department find insufficient time is available for review and processing, it may reject the Proposal on such basis. If the Department fails to respond to the Proposal by the date or time specified, the contractor shall consider the proposal rejected and shall have no claim against the Department.

The bidder is cautioned not to base any bid prices on the anticipated approval of a Contractor Proposal and to recognize that the proposal may be rejected. In the event of rejection, the contractor will be required to complete the contract at the contract bid prices.

The Department will not be liable to the contractor for failure to act upon or accept any Contractor Proposal nor for any delays to the work attributable to any such proposal. The contractor may withdraw, in whole or in part, any Contractor Proposal not accepted by the Department within the period specified in the proposal. The decision of the Department as to the acceptance or rejection of Contractor Proposals shall be final and shall not be subject to the provisions of 105.18.

The contractor will be notified in writing of the Department's decision to accept or reject each Contractor Proposal submitted under these provisions. If a Contractor Proposal is accepted, the necessary contract modifications will be implemented by execution of a change order. Until a Contractor Proposal is affected by such contract modification, the contractor shall perform the work in accordance with the terms of the existing contract.

All costs incurred by the contractor in developing the Contractor Proposal and Department review cost will be borne by the contractor, regardless of whether or not the Contractor Proposal is implemented.

The Department reserves the right to include in the agreement any conditions it deems appropriate for consideration, acceptance, and implementation of the Contractor Proposal.

The Department reserves the right to adopt a Contractor Proposal for general use when it determines that said proposal is suitable for application to other contracts. Subject to the provisions contained herein, the State or any other public agency shall have the right to use all or any part of any submitted Contractor Proposal without obligation or compensation of any kind to the contractor.

Any changed conditions arising as a result of the acceptance of a Contractor Proposal will not be considered as the basis for any claim for additional compensation.

Section 106
Control of Materials

106.01 SOURCE OF SUPPLY AND QUALITY REQUIREMENTS. Materials used in the work shall meet all quality requirements of the contract. To expedite inspection and testing of materials, the contractor shall notify the engineer of his proposed sources of materials at least three weeks prior to delivery. With written authorization, materials may be approved at the source of supply before delivery is started. If it is found after installation that sources of supply for previously approved materials do not produce specified products or results, the contractor shall furnish materials from other sources or make necessary changes to provide acceptable materials at no cost to the department.

106.02 LOCAL MATERIAL SOURCES.

106.02.1 Designated Sources: Possible sources of local materials may be designated on the plans or in the specifications. The quality of material in such deposits will be acceptable in general, but the contractor shall determine the amount of equipment and work required to produce a material meeting specifications. It shall be understood that it is not feasible to ascertain from samples the limits for an entire deposit and that variations are to be expected. The engineer may order procurement of material from any portion of a deposit and may reject portions of the deposit as unacceptable.

The Department may acquire and make available to the contractor the right to take materials from the sources designated on the plans or in the specifications, with the right to use such property as specified for plant site, stockpiles or haul roads.

When the contractor desires to use material from sources other than those designated, the contractor shall acquire the necessary rights or permits to take materials from the sources and shall pay all costs related thereto, including any which may result from increased haul length. All costs of exploring and developing such sources shall be borne by the contractor. Use of material from other than designated sources will not be permitted until representative samples taken by the engineer have been approved and written authority is issued for the use thereof.

106.02.2 Contractor Furnished Sources: When material deposits are not designated in the plans or specifications, the contractor shall

provide sources of acceptable material. When sources of materials are provided by the contractor, the Department may assume the cost of processing samples to determine suitability of material.

106.02.3 Use of Materials Found on the Project: Unless otherwise specified, the contractor may incorporate into the work materials found or produced on the project, such as reclaimed asphalt pavement, recycled portland cement concrete, stone, gravel, sand, topsoil or other materials provided they meet the requirements of the use specified. Payment for removal of such materials will be made under the designated contract items such as cold planing asphalt pavement, removal of portland cement concrete pavement, excavation, etc. Payment will also be made for the pay items into which these materials are incorporated.

The contractor shall replace at no direct pay with acceptable material all removed material which was needed for embankments, backfills, approaches or otherwise. No charge for materials so used will be made against the contractor. The contractor shall not excavate or remove material from within the right-of-way which is not within construction limits, as indicated by slope and grade lines, without written authorization from the engineer. If authorization is obtained, payment will not be made for excavation beyond slope and grade lines, nor will payment be made for any required replacement.

Materials from existing structures may be used temporarily by the contractor in erection of new structures. Modification of such material will not be permitted without written approval.

106.03 ACCEPTANCE SAMPLES AND TESTS. Materials will be inspected, tested, and approved before incorporation into the work. Work in which untested and unapproved materials are used shall be performed at the contractor's risk. Payment will not be made for materials or work found to be unacceptable and, when directed, shall be removed at the contractor's expense.

Unless otherwise specified in the contract, sample and test per the Department’s Materials Sampling Manual or as directed by the Materials Engineer. When the sample or test method is not cited, the following hierarchy applies:

1. DOTD Testing Procedures Manual
2. AASHTO Methods
3. ASTM Methods

Resampling or retesting procedures shall be as determined by the Department's Materials Engineer Administrator. When allowable

variations or conflicts occur within an ASTM or AASHTO test procedure, the established DOTD procedure and publications or hierarchy established above shall govern. All procedures will be the most recent cited which are current on the first date of advertisement for bids. Acceptance testing will be made or witnessed by the Department. Samples for acceptance testing will be taken by an authorized representative of the Department. Materials being used will be subject to inspection, sampling, testing, retesting, or rejection at any time prior to final acceptance. The contractor will be notified of the Department's failing test. Copies of all tests reports will be furnished to the contractor's representative upon request.

The contractor shall supply materials approved by the Department as published in the Approved Materials List. However, inclusion of a product on the Approved Materials List is not a blanket approval for its use in the work, as products are still subject to the requirements of the Materials Sampling Manual. The Approved Materials List may be revised at any time, and only materials approved at the time of construction will be allowed on the project.

106.04 CERTIFICATES. Certificates shall include Certificates of Analysis, Certificates of Compliance, and Certificates of Delivery. These certificates shall be furnished prior to use of materials for which the certificates are required. They shall be signed by the material manufacturer, the manufacturer of assembled materials or the material supplier. If the contract has a Buy America provision, the certificates must indicate compliance with the provision.

Materials used on the basis of these certificates may be sampled and tested at any time. The fact that material is used on the basis of a certificate shall not relieve the contractor of responsibility for incorporating material in the work which conforms to the plans and specifications.

Distribution of certificates and requirements for further sampling and testing of certified materials shall be as outlined in the Department's Materials Sampling Manual.

The Department reserves the right to refuse to permit the use of material on the basis of a certificate.

106.05 CONTRACTOR QUALITY CONTROL. The contractor shall establish and maintain an effective quality control process. The quality control process shall consist of plans, procedures, and organization necessary to provide materials, equipment, workmanship, fabrication, construction and operations which comply with the contract requirements.

The process shall cover all operations both onsite and offsite, and shall be keyed to the proposed construction sequence. The Contractor is responsible for all subcontractors' quality control.

Comply with all requirements in the latest edition of the Department's Quality Assurance Manual" for the appropriate specification section.

Contractor personnel performing sampling and testing, observation, or inspection for the quality control process shall be evaluated and accepted by the Department in accordance with Departmental requirements. Contractor personnel shall have appropriate training and experience in testing procedures and methods of construction for the work they are overseeing. When specifications allow using quality control test results in the acceptance decision, contractor use of an accredited laboratory and certified inspectors is required, or, for materials not normally accredited, certification by a licensed Engineer in the State of Louisiana.

106.06 PLANT INSPECTION. The Department reserves the right to inspect plants and operations producing materials and to test materials prior to incorporation into the work as necessary to ensure contract compliance. When plant inspection is undertaken, the following conditions shall be met:

1. The Department shall have the cooperation and assistance of the contractor and the producer with whom the contractor has contracted for materials.
2. The Department shall have entry at all times to such parts of the plant related to manufacturing or production of materials being furnished.

Certification of specified plants and operations will be in accordance with Department requirements.

106.07 FIELD LABORATORY. The contractor shall provide project site laboratories as required by the specifications to be used exclusively for material acceptance purposes by the Department. The buildings shall be installed, furnished, equipped and maintained in accordance with Section 722, and ready for use prior to the time the contractor's operations require testing.

106.08 FOREIGN MATERIALS. Materials manufactured outside the United States shall be delivered to approved locations within the United States, where they shall be retained until sampling and testing can be completed.

Testing by the contractor shall be performed within the State at the contractor's expense, and be subject to witnessing by the engineer.

Each lot of foreign material shall be accompanied by a Certificate of Compliance prepared in accordance with 106.04. Certificates of Analysis prepared in accordance with 106.04 shall be attached to the Certificate of Compliance for those materials for which Certificates of Analysis are required. These certificates shall clearly identify the lot to which they apply.

Structural materials requiring Certificates of Analysis (Mill Test Reports) will be accepted only from foreign manufacturers who have previously established to the satisfaction of the engineer the adequacy of their in-plant quality control.

Adequacy of quality control shall be established, at the option of the engineer, by submission of detailed written proof of adequate quality control or through a plant inspection by the engineer.

No structural materials will be accepted which cannot be properly identified with Certificates of Analysis and Certificates of Compliance.

106.09 MATERIAL STORAGE AND PLANT SITE. Materials shall be stored and/or stockpiled to assure preservation of their quality and fitness for the work. Such materials, even though accepted before storage, may again be inspected prior to their use in the work. Stored and/or stockpiled materials shall be located to facilitate their prompt inspection. Approved portions of the right-of-way may be used for storage and for placing the contractor's plant and equipment. Additional space required shall be provided by the contractor at no direct pay.

106.10 HANDLING MATERIALS. Materials shall be handled to preserve their quality and fitness for the work. Transport materials from the storage site to the work in vehicles constructed to prevent loss or segregation of materials after loading and measurement, ensuring consistent quantities of materials loaded and consistent quantities received at the place of operations.

106.11 UNACCEPTABLE MATERIALS. Materials not conforming to specifications will be rejected and shall be removed immediately from the work site, unless otherwise directed by the engineer. In addition, if required by the engineer, a sample of the rejected material shall be preserved and delivered to the Department as directed at no additional cost or expense to the Department. No rejected material shall be used until the defects have been corrected and subsequent additional approval has been given.

106.12 DEPARTMENT-FURNISHED MATERIAL. The contractor shall furnish all materials required to complete the work, except those specified to be furnished by the Department.

Material furnished by the Department will be delivered or made available to the contractor at the points specified.

The cost of handling and placing materials after they are delivered to the contractor shall be considered as included in the contract price for the item in connection with which they are used.

The contractor will be responsible for material delivered. Deductions will be made from payments for the work to make good any shortages and deficiencies, for any damage which occurs after such delivery, and for any demurrage charges.

Section 107
Legal Relations and Responsibility to Public

107.01 LAWS TO BE OBSERVED. The contractor shall keep informed of and comply with all Federal, State and local laws, ordinances and regulations, and all orders and decrees of bodies or tribunals having any jurisdiction or authority, which affect those employed on the work or which affect the conduct of the work. The contractor shall indemnify the State and its representatives against any claim or liability arising from violation of any such law, bylaw, ordinance, code, regulation, order or decree, whether by the contractor or the contractor's employees.

Soil and soil-moving equipment operating in regulated areas will be subject to plant quarantine regulations. These regulations provide for cleaning soil from equipment before it is moved from regulated areas to prevent spread of harmful agricultural pests from areas quarantined by the State or U. S. Department of Agriculture. Complete information may be obtained from the appropriate district office of the USDA Plant Protection Division.

When the Department is the contracting agency, (1) any litigation arising under or related to the contract or the bidding or award thereof shall be instituted in the 19th Judicial District Court in and for the Parish of East Baton Rouge, State of Louisiana, and (2) the contractor shall ensure that each subcontract for the project also requires that any litigation arising under the contract, other than to enforce a lien pursuant to L.R.S. 48:256.3 *et seq.*, be instituted in the 19th Judicial District Court in and for the Parish of East Baton Rouge, State of Louisiana.

If any court of competent jurisdiction holds that any provision of this Contract is invalid or unenforceable, then the meaning of such provision shall be construed so as to render it enforceable to the extent feasible; and if no feasible interpretation would save such provision, it shall be severed from this Contract and the remainder of this Contract shall remain in full force and effect.

107.02 PERMITS, LICENSES, TAXES AND INSURANCE. Contractors shall procure temporary permits and licenses for the work, pay charges, fees, and taxes, and give notices necessary for lawful prosecution of the work. Contractor, and its subcontractors, shall maintain all licenses and certifications necessary to accomplish the work in accordance with contract requirements and applicable law.

The contractor shall maintain, at a minimum, the following insurance coverage until final acceptance of the contract:

1. Workers Compensation in compliance with state law, with the exception that the contractor's Employer liability is to be at least $1,000,000 when work is to be over water and involves maritime exposures. For the coverage provided in this subpart the contractor's Insurer will have no right of recovery or subrogation against the State of Louisiana or the Louisiana Department of Transportation and Development.

2. Commercial General Liability Insurance with a combined single limit per occurrence for bodily injury and property damage. The aggregate loss limit must be on a per project basis. This insurance shall include coverage for bodily injury and property damage, and include coverage for Premises-Operation; Broad form Contractual Liability; Products and Completed Operation; Use of Contractors and Subcontractors; Personal Injury; Broad form Property Damage; and Explosion, Collapse and Underground (XCU) coverage. The required combined single limit amount of insurance shall be as provided in Table 107-1.

3. A separate Owner's and Contractor's Protective Liability (OCP) Policy shall be furnished by the contractor naming the Louisiana Department of Transportation and Development as the named insured. The policy period of the OCP insurance shall extend through final acceptance of the project. The required combined single OCP limit amount shall be as provided in Table 107-1.

4. Business Automobile Liability Insurance with a combined single limit per occurrence for bodily injury and property damage. This insurance shall include bodily injury and property damage coverage for owned automobiles, hired automobiles and non-owned automobiles. The required combined single limit amount of insurance shall be as provided in Table 107-1 below.

Table 107-1
Insurance Requirements
($ in millions)

Initial Contract Amount	Occurrence Minimum	Aggregate	Ultrahazardous Aggregate
Up to $1	$ 1	$ 2	$ 3
From $1 to $ 2	$ 2	$ 4	$ 6
Over $2	$ 5	$10	$15

Aggregate coverage for projects with ultrahazardous activities shall be triple the occurrence minimum. Ultrahazardous activities include pile

driving; transportation, use, storage, or removal of explosives, radioactive materials, or particularly hazardous or volatile chemicals; and asbestos or lead paint abatement; but does not include vibratory installation of sheet piles.

Each policy shall include provisions stipulating that the insurance company(ies) shall have no recourse against the State of Louisiana and the Department for payment of any premiums or for assessments under any form of the policy and that any and all deductibles in the above described insurance policy(ies) shall be assumed by and be at the sole risk of the contractor.

Insurance is to be placed with insurance companies authorized in the State of Louisiana with an A. M. Best's rating of A-: VI or higher. This rating requirement may be waived for Workers Compensation coverage only.

Should any policies be canceled, the contractor shall immediately notify the Department.

Upon failure of the contractor to furnish, deliver and maintain such insurance for itself as required, this contract, at the election of the Department, may be immediately declared suspended, discontinued or terminated. Upon failure of the contractor to maintain OCP insurance at any time prior to final acceptance of the project, work on this contract shall be immediately suspended until proof of such insurance is presented to and accepted by the Department's Project Control unit. During a suspension caused by the lack of any required insurance, contractual time charges will continue to be assessed against contract time, as will any assessment of stipulated damages, without interruption.

Failure of the contractor to maintain any required insurance shall not relieve the contractor from any liability under the contract, nor shall the insurance requirements be construed to conflict with the obligations of the contractor concerning indemnification under 107.17.

The contractor is responsible for requiring and verifying that all subcontractors working on the project maintain appropriate types and levels of insurance coverage.

This contract does not authorize or appoint contractor as an agent or mandatory of the Department, or of the State of Louisiana. Accordingly, the contractor is subject to and responsible for all taxes incurred in the performance of its contractual obligations.

107.02.1 Reimbursement of OCP Insurance: Contractor may submit the direct cost of OCP insurance (only) to the Department for reimbursement. The provisions of 109.04 shall not apply to this

reimbursement. The cost of all other required insurance must be included in contractor's overhead applied to all other bid items.

The Department will reimburse the actual cost of OCP coverage, with no allowed mark-up, as shown on an invoice produced by the insurance provider. Contractor must also submit an original sworn affidavit from the insurance producer/agent in which that person attests that the submitted invoice is for the required OCP coverage only, and that the invoice accurately reports the cost to contractor of that coverage. The invoice and affidavit may be submitted at the preconstruction conference or thereafter for inclusion with a partial estimate.

There will be no reimbursement for any purchase of OCP insurance policy extensions necessitated by concurrent; non-excusable; or excusable, non-compensable delays in completion of the project, whenever such delays occur, or for claimed utility delays where such days were not added to Contract Time by change order. Any policy extensions necessitated by excusable, compensable delays will be reimbursed on a pro-rata monthly basis.

107.03 PATENTED DEVICES, MATERIALS AND PROCESSES. If the contractor uses any design, device, material, or process covered by patent or copyright, the contractor shall be responsible for such use. The contractor and surety shall indemnify the State, any affected third party or political subdivision from claims for infringement due to the use of any such patented design, device, material or process, or any trademark or copyright and shall indemnify the State for any costs, expenses, and damages due to any infringement during prosecution or after completion of the work.

If the contractor submits proposed plans, specifications, manufacturer's data, or any other information or documents to the Department for a proposed change order, value engineering proposal or for any other purpose which may be protected by copyright or trade secret protection, the contractor shall first obtain permission or license from the licensor or any other party having a proprietary interest in such documents or information and shall hold harmless, indemnify and defend the Department at the contractor's sole cost from any damages, expenses or actions arising out of or related to use by the Department of information or documents supplied by the contractor to the Department.

107.04 RESTORATION OF SURFACES OPENED BY PERMIT. The right to construct or reconstruct any utility service in the highway or to

grant permits for same, at any time, is reserved by the Department for proper authorities of the municipality in which the work is done and the contractor will not be entitled to damages either for digging up of the highway or delays occasioned thereby.

When an individual, corporation, or any other legal entity is authorized through an executed permit from the Department, the contractor shall allow parties bearing such permits to make openings in the highway. The contractor shall, when ordered, make all necessary repairs due to such openings. Payment for such work will be made as extra work or as provided in these specifications, and will be subject to the same conditions as original work performed.

107.05 FEDERAL AID PARTICIPATION. When the United States Government participates in the cost of the work covered by the contract, the work shall be under the supervision of the State, but subject to inspection and approval of the proper official of the United States Government, in accordance with applicable Federal Statutes, and rules and regulations pursuant thereto. Such inspection shall not make the Federal Government a party to the contract and will not interfere with the rights of either party there under.

107.06 SANITARY, HEALTH, AND SAFETY PROVISIONS. The contractor shall not require any worker to work under conditions which are unsanitary, hazardous, or dangerous to health or safety. The contractor shall maintain the work in a sanitary, safe, and nonhazardous condition.

The contractor shall provide and maintain in a neat, sanitary condition, restrooms and other such accommodations for use of employees and Department personnel. Such facilities shall comply with requirements of the State and local Boards of Health or other bodies or tribunals having jurisdiction.

The contractor shall comply with all Occupational Safety and Health Administration (OSHA) regulations.

If the contractor provides an Emergency, Health and Safety (EHS) plan during the preconstruction conference, all Department employees assigned to the project shall comply with the plan while on or adjacent to the job site. The contractor shall not be liable under 107.17 for bodily injuries, death, or damages sustained by the Department, or by any Department employee, due directly to the Department employee's failure to abide by the EHS plan provided by the contractor.

107.07 PUBLIC CONVENIENCE AND SAFETY. The contractor shall conduct the work to assure the least possible obstruction to traffic. The project site and haul route shall be kept reasonably free from dust and in such condition that the public can travel in safety.

When the highway under construction is to be kept open for traffic, the subgrade and surfacing shall be kept in such condition that the public can travel in safety. Safety and convenience of the general public and the residents along the work, and protection of persons and property, shall be a primary responsibility of the contractor.

When the contractor works at night, adequate artificial lighting shall be provided. Signs, flaggers, or other traffic controls shall be provided to protect workers, the work, and the traveling public. When such work affects traffic safety, the contractor shall submit to the engineer for approval a plan of lighting, signing, flagmen, or other traffic controls. If the approved plan proves inadequate after work begins, the contractor shall make such changes as needed. If the engineer finds that the night work is so hazardous as to preclude the beginning or require the discontinuing of such work, the contractor shall immediately cease all such operations.

107.08 RAILWAY-HIGHWAY PROVISIONS. It is the Contractor's responsibility to contact the railroad to determine the railroad's requirements for work within the railroad right of way and to comply with those requirements. The Contractor shall attend any safety orientation/training required by the Railroad.

All work to be performed by the contractor in construction on railway right-of-way shall be at a minimum in accordance with the following provisions.

1. The contractor shall notify the Railway's duly designated representative at least 10 days in advance of the date on which the contractor is expected to begin work on the Railway's premises.

2. During the progress of work on or about the Railway's tracks or premises, the contractor shall maintain contact and liaison with the Railway's officers or representatives designated by the Railway and Railway approved contractors so as to ascertain time of passage of trains at the work in order to clear Railway's tracks and facilities of people, equipment and obstructions to permit free flow of railway traffic. The contractor shall perform work on the Railway's premises without materially interfering with the Railway's tracks, structures and facilities or operations, or the operations of the Railway's tenants or licensees, or with communication and signal lines upon said premises, except under

documented arrangement effected between the contractor and the Railway. The Contractor shall ensure all Railroad signals are returned to working order and all electronic/electrical equipment is functioning as intended before conclusion of the project work. The contractor shall protect the Railway's property and avoid accidents. The contractor shall keep the Railway's track and roadbed free of earth, rock, construction materials, debris and obstructions.

The contractor shall immobilize equipment parked near the Railway's track, when such equipment is unattended, to prevent its movement by unauthorized persons.

3. The contractor shall, before entering upon the Railway's right-of-way for performance of any construction work, or work preparatory thereto, secure permission from the Railway's representative for the occupancy and use of the Railway's right-of-way outside the limits of the highway servitude area and shall confer with the Railway relative to requirements for railway clearances, operation and general safety regulations.

4. The Railway's representative will at all times have jurisdiction over the safety of railway operation. The decision of the Railway's representative as to procedures which may affect the safety of railway operation shall be final. The contractor shall be governed by such decision.

5. Should any damage occur to railway property, as a result of the contractor's unauthorized or negligent operations, and the Railway deems it necessary to repair such damage or perform work for protection of its property, the required materials, labor and equipment shall be furnished by the Railway. The contractor shall reimburse the Railway for costs incurred.

6. If the contractor’s methods or equipment requires access across the Railway's right-of-way and tracks at any location which is not an existing permanent type of open public railway-highway crossing in or incident to the construction of the project, the contractor shall contact the Railway and request access across said right-of-way and tracks and execute a license agreement with the Railway, all at no direct pay. The contractor shall reimburse the Railway for the cost of providing and removing any temporary at-grade and grade-separated structure access crossing, including warning devices, watchmen expense or other costs which the Railway deems necessary for protection of Railway property and operations. The type of temporary crossing required shall be determined by the Railway. The contractor shall not cross the Railway's right-of-way and tracks with vehicles or equipment except at existing open public road crossings or at such crossings established pursuant to this paragraph. The foregoing requirements include new grade crossings which will become part of the

finished highway being constructed under the contract. The contractor shall comply with requirements for insurance in 107.08.14 below during operations hereunder. The contractor shall cooperate with the Railway during all phases of the work including sufficient advance notice for project completion in order for the Railway to remove the temporary grade crossing and perform final grade crossing improvements and/or inspections under the agreement with the Department prior to final acceptance.

7. Any engineering, inspection, training, flagging, and watcher service required by the Railway for the safety of Railway operations because of work being performed by the contractor or in connection therewith, shall be provided by the Railway and the cost thereof shall be reimbursed to the Railway, by the contractor, on the basis of the Railway's bills, to be rendered monthly. The contractor will be reimbursed, by the Department, for its actual incurred cost for such services with no contractor mark-up allowed. The contractor shall furnish documentation of railway invoices and evidence of payment before reimbursement. When it is determined that railroad services and/or crossings are no longer in the best interest of the Department, the contractor will be issued written notification that no further reimbursement will be made by the Department for railroad services. Work done or services provided for the contractor's convenience will not be reimbursed by the Department.

Any engineering, inspection, training, flagging, and/or watcher service required by the Railway for the safety of Railway operations because of work being performed by the contractor, or in connection therewith, and which the Railway requires that the contractor provide will be reimbursed by the Department at the actual incurred cost for such services with no contractor mark-up allowed. The contractor shall furnish documentation of railway invoices and evidence of payment before reimbursement by the Department. The contractor shall notify the Railway 72 hours in advance of when railway services are required.

8. The contractor will be required to reimburse monthly the Railway for the cost of all services performed by the Railway for the contractor, and furnish the Department satisfactory evidence that the Railway has acknowledged receipt of payment before final acceptance.

9. During construction of piers or other supports or structures adjacent to any track or of drainage pipe or structure under or adjacent to any track of the Railway, the contractor shall make adequate provisions against sliding, shifting, sinking or in any way disturbing the railway embankment and track adjacent to said piers, supports or structures due to construction operations by driving temporary sheeting or by other means satisfactory to

the Department and Railway.

10. Before commencing work on any pier or structure adjacent to any track, or on any structure and parts thereof which carry Railway facilities, the contractor shall submit to the engineer, prints of the proposed sheeting, shoring, bracing and falsework details for protection of the Railway's track and embankment and shall submit prints of the shop drawings or other contractor's detailed plans for structures and parts thereof which will carry Railway facilities. This submittal shall include proposed methods of construction and be accompanied by supporting data, including design computations, soil descriptions and other pertinent information.

After acceptance by the engineer, four prints of the above plans, shop drawings and details bearing the seal of a registered Civil Engineer, with supporting data and documents, shall be forwarded to the Railway for approval. Prior to beginning work on Railway right-of-way, the shop drawings and details, with supporting data and documents, shall be approved by the Railway.

11. The contractor shall possess the required Railroad permits and notify the Railway's representative in writing at least one week in advance of the proposed time of the beginning of construction of piers, supports or structures adjacent to the track or of drainage pipe or structure under or adjacent to the track.

12. The following temporary clearances are the minimum which shall be maintained during construction operations:

Vertical: 22.5 feet above top of highest rail.

Horizontal: 10.0 feet from centerline of the nearest rail measured at right angles thereto.

If lesser clearances are required for any part of the work, the contractor shall secure written authorization from the Railway's representative for such lesser clearances in advance of the start of work on that portion of the project along, on, over, under or across the right-of-way or tracks of the Railway.

13. The contractor shall not store or construct falsework or store materials, supplies or equipment closer than 15.0 feet from the centerline of the nearest rail, measured at right angles thereto, or 22.5 feet vertically from top of rail.

14. Unless otherwise specified by special provisions or waived by the railroad, the contractor shall provide insurance of the following kinds and amounts:

14.1. Regular Contractor's Public Liability and Property Damage Insurance, including automobile, issued in the name of the contractor shall

be written to furnish protection to the contractor respecting operations in performing work covered by the contract in regard to the liability with respect to bodily injury to or death of persons, and injury to or destruction of property, which may be suffered by persons other than the contractor's employees as a result of operations in connection with construction of highway projects located wholly or partly within railroad right-of-way.

14.2. When a contractor sublets a part of the work on any project to a subcontractor, the contractor shall be required to secure insurance protection in the contractor's own behalf under Contractor's Public Liability and Property Damage Insurance policies to cover any liability imposed on the contractor by law for damages due to bodily injury to or death of persons and injury to or destruction of property as a result of work undertaken by such subcontractors.

In addition, the contractor shall provide for, and on behalf of, any such subcontractors protection to cover like liability imposed upon the latter as a result of their operations by means of separate and individual Contractor's Public Liability and Property Damage policies. As an alternative, each subcontractor shall provide satisfactory insurance as described herein on the subcontractor's own behalf to cover the subcontractor's individual operations.

14.3. Railroad Protective Liability Insurance shall be purchased on behalf of the Railway by the contractor. The standards for Railroad Protective Liability Insurance shall be in accordance with provisions of the Federal-Aid Policy Guide (FAPG) Part 646 as amended. Proof of Railroad Protective Liability Insurance, with the policy period effective until final acceptance of the project, must be submitted in accordance with 103.06.

The limits of liability for the kinds of insurance required above shall be as follows:

RAILROAD INSURANCE COVERAGE (other than AMTRAK)
(1), (2) and (3)

Combined Single Limit for Bodily Injury Liability, Property Damage
Liability and Physical Damage to:
Property - $2,000,000 per occurrence
Aggregate Limit - $6,000,000 for the term of the policy

AMTRAK COVERAGE
(1), (2) and (3)

Combined Single Limit for Bodily Injury Liability, Property Damage
Liability and Physical Damage to:
Property - $6,000,000 per occurrence

Aggregate Limit - $12,000,000 for the term of the policy

The name of the Railway and the ratio of the estimated cost of operations within the Railway's property to the total estimated project cost, expressed by percent, will be specified in the project specifications. No direct payment will be made for providing the required insurance coverage by the contractor.

15. The insurance specified shall be kept in force until final acceptance of the contract. Proof of Insurance is required at the project site anytime work is in progress on or near the Railroad.

16. The contractor shall indemnify the Railway, its officers and employees from all suits, actions, or claims brought because of injuries or damages sustained by any person or property due to operations of the contractor; due to negligence in safeguarding the work; or use of unacceptable materials in constructing the work; or any negligent act, omission or misconduct of the contractor; or claims or amounts recovered from infringements of patent, trademark, or copyright.

17. Upon completion of the work, the contractor shall, within 10 calendar days, remove from within the limits of the Railway's right-of-way all machinery, equipment, surplus materials, falsework, rubbish, or temporary buildings of said contractor, and restore the Railway's premises substantially to their former condition or documented proposed conditions agreed upon by the Railroad, Department, and Contractor as satisfactory to the Railway's representative.

Should the contractor fail to make such removal and restoration within 10 calendar days, the Railway shall have the right to make such removal or restoration. The expense incurred shall be chargeable to the project on the Railway's force account statement and the Department will reimburse the Railway for such work. The amount will be deducted from payments due the contractor.

All costs incurred under this subsection, other than as provided in 107.08.7, or for which payment is elsewhere provided, shall be included in the contract prices of other pay items.

Prior to final acceptance of the project, the contractor shall secure a Certificate of Final Inspection and Payment, as found on the Department’s website, signed by both the Department representative and a duly authorized railroad company representative, and furnish same to the Department stating that the contractor has satisfactorily restored the Railway's premises and has completed payments for all railway services performed for the contractor's account. If the contractor is unable to secure

a Certificate of Final Inspection and Payment from the Railway, the contractor shall submit to the engineer an executed Contractor's Sworn Railroad Affidavit, in which the Contractor warrants (1) the work the Contractor performed on railway right-of-way; (2) that, despite a diligent effort, the Contractor was unable to acquire the Certificate of Final Inspection and Payment from the railroad company; (3) that all work on railway right-of-way complies with and conforms to all contract documents and railway requirements; (4) that the Contractor has made all payments and reimbursements required by the railroad company and its respective right-of-access agreement; (5) that the Contractor has removed all his machinery, equipment, materials, falsework, rubbish, and temporary structures from railway right-of-way and has returned or restored railway property to a condition equal to or better than its former condition.

In addition, on said affidavit, the Contractor shall agree to (1) indemnify, defend, and hold the Department harmless from and against all claims, demands, causes of action, or rights of action arising from or related to any negligent or intentional act, omission, or misconduct of the contractor on the railway right-of-way, and (2) in the event of a claim or legal action asserting liability covered by the Contractor's Sworn Railroad Affidavit, regardless of the merits of the claim or legal action and whether or not the Department is cast in judgment based on such a claim or legal action, the Contractor agrees to indemnify the Department in the amount of any litigation related costs, including, without limitation, attorneys' fees and expert witness fees and costs, incurred by the Department in connection with such a claim or legal action covered by the Contractor's Sworn Railroad Affidavit.

107.09 NAVIGABLE WATERS AND WETLANDS. All work in, over, or adjacent to navigable waters or wetlands shall be conducted in accordance with rules and regulations of the U. S. Army Corps of Engineers and U. S. Coast Guard.

Navigable clearances on waterways shall not be infringed upon, and existing navigable depths shall not be impaired except as allowed by permits issued by the responsible agency.

The Department will obtain a permit from the U. S. Coast Guard and U.S. Army Corps of Engineers relative to approval of construction plans for bridges, causeways, embankments, dredging, spoil disposal, etc., for work in navigable waters or wetlands. The contractor will be furnished a copy of the permit and shall comply with all provisions and conditions of the permit. When required by permit, upon completion and before final

acceptance of the project, the contractor shall furnish the Bridge Design Engineer 8-by-10-inch color photographs of the bridge from abutment to abutment, two photographs looking upstream and two looking downstream. The prints shall be glossy finish, mounted on linen. These photographs will be furnished at no direct pay.

The contractor shall prepare reproducible drawings complying with the standards of the U. S. Coast Guard and the U. S. Army Corps of Engineers showing falsework construction, test piles or other temporary pile driving operations, erection sequence, temporary navigational lighting, location of equipment and barges in the navigable limits and other drawings required by the permit agencies. Drawing sizes shall be 8-by-10 1/2 inches with a 1-inch border on the top or short side. The drawings shall be submitted to the Bridge Design Engineer for acceptance and transmittal to the appropriate agency for approval. Construction of falsework, test pile operations and erection or operation of construction equipment within the navigable limits shall not commence until drawings are approved.

The contractor shall display lights on equipment operating, berthed, or moored in navigable streams, and provide temporary navigational lighting on temporary and permanent construction in the navigable limits as required by the U. S. Coast Guard.

Should the contractor sink, lose, or throw overboard any material, machinery, or equipment which may be dangerous to navigation, it shall be immediately removed or recovered. The contractor shall give immediate notice of such obstruction to proper authorities and, if required, shall mark or buoy such obstruction until it is removed.

The contractor shall not deposit excavated material into the water-way or wetland without a permit from the appropriate agency.

All operations in connection with the work shall be in accordance with permits, rules and regulations of the U. S. Army Corps of Engineers and the U. S. Coast Guard. Deviations therefrom shall be only by special permission or special permit which shall be the responsibility of the contractor. Failure of the contractor to become familiar with the terms, conditions and provisions of the permits, rules and regulations applicable to the work shall not relieve the contractor of responsibility under the contract.

The contractor shall conduct operations to cause minimum interference with marine operations. If interference is necessary, the contractor shall notify the Department's Bridge Design Engineer, in writing, sufficiently in advance so that the Department may obtain approval from the U. S. Coast Guard at least 3 weeks prior to said interference.

Copies of Department obtained permits are available from the Department's Environmental Section.

Copies of any special permits obtained by the contractor shall be submitted immediately to the Bridge Design Engineer.

107.10 BARRICADES AND WARNING SIGNS. The contractor shall provide, erect, and maintain necessary barricades, suitable lights, danger signals, signs, and other traffic control devices, including flaggers, and shall take all necessary precautions for protection of the work and safety of the public. Highways closed to traffic shall be protected by effective barricades. Suitable warning signs shall be provided to direct traffic.

The contractor shall erect and maintain warning signs in advance of any place on the project where operations may interfere with traffic, and at intermediate points where new work crosses or coincides with an existing road.

Barricades, warning signs, lights, temporary signals, and other protective devices shall conform to the details shown on the plans and the MUTCD.

107.10.1 Certification: Prior to installation, the contractor shall furnish the engineer a listing of all the Category II and III devices to be used on the project, including a reference to the FHWA Work Zone letter number for each device. FHWA letters of approval shall serve as verification that these devices comply with the crash testing requirements of NCHRP Report 350 or MASH. Provide a certificate of compliance indicating the producer/supplier code for all barricades and warning signs delivered to the project.

107.11 USE OF EXPLOSIVES. Explosives shall not be used without written approval from Chief Construction Engineer. When explosives are used, the contractor shall not endanger life or property. The use of explosives shall be in compliance with all laws and ordinances. The contractor shall be responsible for all damage resulting from the use of explosives.

Explosives shall be securely stored, in compliance with all laws and ordinances. Such storage places shall be clearly marked. When no local laws or ordinances apply, satisfactory storage shall be provided not closer than 1,000 feet from any road, building or place of human occupancy.

The contractor shall notify, in writing, each utility company and affected property owner having facilities in proximity to the site of work of the intention to use explosives. Such notices shall be given sufficiently in

advance to enable them to protect their property from damage.

107.12 PRESERVATION OF PUBLIC AND PRIVATE PROPERTY. The contractor shall be responsible for preservation of public and private property and shall protect from disturbance and damage all land monuments, property line markers or horizontal and vertical control monuments such as those established by the United States Coast and Geodetic Survey, National Geodetic Survey, Louisiana Geodetic Survey, Louisiana DOTD, Corps of Engineers, or United States Geological Survey. Before removing and/or resetting any survey monuments, the contractor shall give sufficient written advance notice to the engineer with a copy to the Department's Location and Survey Section for coordination with the appropriate agency. The contractor shall not disturb or move any such monument without written approval. The contractor shall give immediate written notice to the engineer, with a copy to the Department's Location and Survey Section, of damage to survey monuments. The engineer will designate the location and manner in which monuments are to be reset in accordance with current Department procedures.

The contractor shall be responsible for damage to property during the work due to any negligent act, omission or misconduct in executing the work, or due to defective work or materials. This responsibility will not end until final acceptance.

When damage is done to public or private property by the contractor due to any negligent act, omission or misconduct in execution of the work, or in consequence of nonexecution thereof by the contractor, such property shall be restored at the contractor's expense, to a condition similar or equal to that existing before such damage was done, by repairing, rebuilding or otherwise acceptably restoring as directed, or making good such damage in an acceptable manner.

107.13 FOREST PROTECTION. In carrying out work within or adjacent to State or National Forests, the contractor shall comply with all regulations of the Department of Public Safety Office of the State Fire Marshal, Department of Wildlife and Fisheries/Wildlife Division, and the Department of Agriculture and Forestry or other authority having jurisdiction governing protection of forests and performance of work within forests. The contractor shall observe all sanitary laws and regulations with respect to performance of work in forest areas. The contractor shall keep the areas in an orderly condition, dispose of all refuse, and obtain permits for construction and maintenance of all construction

camps, stores, warehouses, residences, latrines, cesspools, septic tanks and other structures in accordance with requirements of the forest supervisor.

The contractor shall take reasonable precaution to prevent and suppress forest fires and shall require employees and subcontractors, both independently and at the request of forest officials, to do all that is reasonable within their power to prevent and suppress forest fires and to notify a forest official at the earliest possible moment of the location and extent of any fire seen by them.

107.14 ENVIRONMENTAL PROTECTION. The contractor shall comply with federal, state and local laws and regulations controlling pollution of the environment, including air, water and noise. The contractor shall take precautions to prevent pollution of waters and wetlands with fuels, oils, asphalts, chemicals, or other harmful materials and to prevent pollution of the atmosphere from particulate and gaseous matter. Attention is directed to Section 204, Temporary Erosion Control.

The contractor certifies under penalty of law that he understands and will abide by the terms and conditions of the Storm Water Pollution Prevention Plan (SWPPP) and the National Pollution Discharge Elimination System (NPDES) General Permit that require the discharges from construction sites be managed to prevent pollutants from entering waters of the United States in accordance with the Environmental Protection Agency's (EPA) regulations for storm water discharges with respect to 33 U.S.C. § 1342 (Sections 402 (p) and 405 of Public Law 100-4).

The use of erosion control features or methods other than those in the contract shall be as directed.

The Storm Water Pollution Prevention Plan shall be comprised of all components specified in the U.S. Environmental Protection Agency document entitled, “Storm Water Management for Construction Activities,” and shall include Section 204, Temporary Erosion Control of the standard specifications along with applicable supplemental specifications, special provisions, and the plans.

Construction operations in rivers, streams, lakes, tidal waters, reservoirs, canals, and other impoundments will be restricted to areas where it is necessary to perform filling or excavation to accomplish the work and areas which must be entered to construct temporary or permanent structures. Operations in navigable waters, wetlands, or other waters of the United States require permits. It is the responsibility of the contractor to ensure all appropriate permits are obtained prior to commencement of

operations. As soon as conditions permit, streams and impoundments shall be cleared of temporary obstructions placed therein or caused by construction operations.

Frequent fording of streams with construction equipment will not be permitted.

No residue from dust collectors or washers shall be dumped into a stream. Attention is further directed to the federal, state, and local air pollution control programs and their rules and regulations regarding air pollution, especially open burning, fugitive dust and asphalt concrete plant restrictions.

The contractor shall maintain and operate equipment to minimize noise and vibration as well as comply with local noise ordinances. Engines shall be equipped with properly functioning mufflers. The contractor shall assure the activities near noise and vibration sensitive areas, such as churches, hospitals, and schools are not unduly disruptive.

107.15 AIR NAVIGATION. The Department will obtain a permit (or a determination of no hazard to air navigation) from the FAA for all permanent structures. The contractor will be furnished a copy of the permit, if requested. If the contractor's equipment, falsework, etc. is classified as a hazard to aerial navigation, the contractor shall prepare drawings complying with the FAA current requirements for temporary lighting for protection of aerial navigation. These drawings shall be submitted to the Bridge Design Engineer and Project Engineer for review and transmittal to the FAA for approval. Operations in connection with the work for protection of aerial navigation shall be in accordance with the approved drawings and applicable federal regulations. Failure of the contractor to be familiar with applicable rules and regulations of the FAA will not relieve the contractor of responsibility under the contract.

107.16 HAZARD ZONES. If any portion of the work is determined to be within a known hazard zone, the presence of such hazards will be noted in the plans or project specifications to the extent that definite information can be obtained on these situations.

It shall be the responsibility of the contractor to arrange and coordinate the work in the area with the agency or agencies concerned.

The contractor shall obtain from the Department and submit to the engineer the Department's Standard Release Form signed by the agency involved stating that the contractor has satisfactorily discharged the obligations under terms of the arrangements. This form shall be submitted

with the required signatures.

Failure of the Department to determine the presence of all hazards and to note same on the plans or in the project specifications shall not relieve the contractor from performing any required work.

107.17 DAMAGE CLAIMS. The contractor shall indemnify, defend, and hold the Department, its officers and employees harmless from all suits, actions, or claims brought because of injuries or damage sustained by any person or property due to operations of the contractor in connection with the Contract; due to negligence in safeguarding the work; or use of unacceptable materials in constructing the work; or any negligent or intentional act, omission or misconduct of the contractor; or claims or amounts recovered from infringements of patent, trademark or copyright; or from claims or amounts arising or recovered under the Workmen's Compensation Act or other law, ordinance, order or decree. Any money due the contractor as considered necessary by the Department for such purpose, may be retained for use of the State; or, in case no money is due, the surety bond may be held until such suits, actions, claims for injuries or damages have been settled and suitable evidence to that effect furnished to the Department; except that money due the contractor will not be withheld when the contractor produces satisfactory evidence that adequate Workman's Compensation, Public Liability, and Property Damage Insurance are in effect.

107.18 OPENING SECTIONS TO TRAFFIC. Opening of sections of the work to traffic prior to completion of the entire contract may be desirable from a traffic service standpoint, or may be necessary due to conditions inherent in the work or by changes in the contractor's work schedule, or may be required due to conditions or events unforeseen at the time of the contract. Such openings shall be made when directed and shall not constitute acceptance of the work nor a part thereof or a waiver of any provisions of the contract.

The plans or project specifications will specify, insofar as possible, which sections shall be opened prior to completion of the contract. On any section opened by order of the engineer, when not specified, the contractor will not be required to assume any expense entailed in maintaining the road for traffic. Such expense will be borne by the Department or compensated for in accordance with 109.04. On portions of the project which are ordered to be opened for traffic, in the case of unforeseen necessity not the fault of the contractor, compensation for additional expense to the

contractor and allowance of additional time for completion of other work on the opened portions of the project shall be as set forth in a change order mutually agreed on by the engineer and the contractor.

When the contractor's progress is undesirably slow in completing shoulders, drainage structures or other features of the work, the engineer may notify the contractor in writing and establish therein a reasonable period of time in which the work is to be completed. If the contractor fails to make a reasonable effort toward completion in this time period, the engineer may order all or a section of the project opened to traffic. On such sections ordered to be opened, the contractor shall conduct the remainder of construction operations to cause the least obstruction to traffic and shall not receive any added compensation due to the added cost of the work by reason of opening such section to traffic.

On any section opened to traffic under the foregoing conditions, whether specified in the contract or opened by necessity of the contractor's operations or unforeseen necessity, any damage to the highway not attributable to traffic that occurs on such section (except slides) shall be repaired by the contractor at no direct pay. Removal of slides shall be done by the contractor on a basis agreed to prior to removal of such slide.

107.19 CONTRACTOR'S RESPONSIBILITY FOR WORK. Until final acceptance, the contractor shall have garde, charge, and care of the work and roadway within the project limits. In addition, the contractor shall take every precaution against damage to any part thereof by action of the elements, vandalism, theft, or from any other cause. The contractor shall rebuild, repair, restore, or pay for damages, including theft and vandalism, to the work before final acceptance and shall bear the expense thereof, except for the following:

1. Guard rail and impact attenuators shall be repaired as soon as possible after damage. If the engineer determines that the contractor did not contribute to the damages, the contractor shall first attempt to collect repair costs from responsible third parties. The Department will reimburse the contractor for such repairs by force account in accordance with 109.04 when responsible parties cannot be identified.

2. Unavoidable damage, except for materials and equipment that are not incorporated into the Project, due to Acts of God as defined in 101.03, or due to/by acts of governmental authorities.

In case of suspension of the work, the contractor shall continue to be responsible for the project. The contractor shall take such precautions as necessary to prevent damage to the project, maintain traffic, provide for

normal drainage, and erect any necessary temporary structures, signs or other facilities at no direct pay. During such period of suspension, the contractor shall acceptably maintain all living material in newly established plantings, seedings and soddings furnished under the contract, and shall take adequate precautions to protect new tree growth and other important vegetative growth against damage. Should suspension of the work not be attributed to any actions of the contractor, the contractor will be reimbursed for additional work.

107.20 UTILITY PROPERTY AND SERVICES. The contractor's operations adjacent to properties of a railway, utility companies, or other property, damage to which might result in considerable expense, loss, or inconvenience, shall not commence until after all arrangements necessary for the protection thereof have been made.

The contractor shall cooperate with owners of utility lines in their removal and relocation, in order that these operations may progress in a reasonable manner, that duplication of relocation work may be minimized and that services rendered by those parties will not be unnecessarily interrupted.

In the event of interruption of utility services due to accidental breakage or being exposed or unsupported, the contractor shall promptly notify the proper authority and shall cooperate with such authority in restoration of service. If utility service is interrupted, continuous cooperation will be required until service is restored. No work shall be undertaken around fire hydrants until provisions for continued service have been approved by the local fire authority.

107.21 FURNISHING RIGHT-OF-WAY. The Department will be responsible for securing all necessary right-of-way, servitudes and easements in advance of construction.

107.22 PERSONAL LIABILITY OF PUBLIC OFFICIALS. In carrying out the provisions of these specifications, or in exercising any authority granted to them by the contract, there shall be no liability upon the Secretary, Chief Engineer, or their authorized representatives, either personally or as officials of the State, it being understood that in all such matters they act solely as representatives of the State.

107.23 NO WAIVER OF LEGAL RIGHTS. Upon completion of the work, the Department will make final inspection and then notify the

contractor of acceptance within 30 calendar days. Such final acceptance shall not prevent the Department from correcting any measurement, estimate or certificate made before or after completion of the work, nor shall the Department be prevented from recovering from the contractor or the surety, or both, any overpayment it may sustain. The contractor and its surety shall be solidarily liable for any overpayment or added expense incurred by the Department, as provided in the contract or resulting from any deficient performance of the work, in excess of any remaining amounts due the contractor.

A waiver by the Department of any breach of any part of the contract shall not be a waiver of any other breach.

The contractor, without prejudice to the terms of the contract, shall be liable to the Department for latent defects, fraud or such mistakes as amount to fraud, or as regards the Department's rights under any warranty or guaranty.

107.24 THIRD PARTY LIABILITY. It is agreed between the parties executing the contract that it is not intended by any provisions of the contract to create the public nor any member thereof a third party beneficiary hereunder, nor to authorize anyone not a party to this contract to maintain a suit for personal injuries or property damage pursuant to the contract.

107.25 ANTI-TRUST VIOLATIONS. By execution of the contract, the contractor conveys to the Department all rights, title and interest in and to all causes of action it may acquire under Federal and State anti-trust laws, relating to the goods or services purchased by the Department pursuant to the contract.

107.26 CONTRACTOR'S PAYROLLS. When predetermined minimum wage rates are included in the contract, the minimum wage determination shall be posted by the contractor in a prominent and easily accessible place at the site of work.

On Federal-Aid Projects, the contractor's payrolls shall be in accordance with the project specifications.

107.27 ARCHAEOLOGICAL FINDINGS AND UNMARKED BURIALS. If the contractor encounters cultural artifacts or archaeological or historical sites, operations in the area of the discovery shall be discontinued. The engineer will contact the DOTD Environmental

Engineer Administrator, or designee, in order that an appropriate assessment may be made to determine the disposition thereof and necessary actions relative to the site. Those decisions will be made in consultation with, as applicable, the State Archaeologist, the State Historic Preservation Officer, and the lead federal agency. When directed, the contractor shall perform services on the site to preserve the artifacts encountered. Such extra work will be paid for in accordance with 109.04, including an appropriate adjustment in contract time in accordance with 108.07. Borrow and muck disposal areas furnished by the contractor will be subject to such assessment by the contractor prior to use.

If the contractor discovers unmarked burial sites, human skeletal remains, or burial artifacts, operations in the area of the discovery shall be discontinued. The contractor will notify the proper authorities, as well as the engineer, in compliance with the Louisiana Unmarked Human Burial Sites Preservation Act (RS 8:680-681).

Section 108
Prosecution and Progress

108.01 SUBLETTING OF CONTRACT. The contractor shall not sublet any portion of the contract, excluding material, without written consent, including work sublet to an authorized Disadvantaged Business Enterprise. If such consent is given, the contractor will be permitted to sublet a portion of the work, but shall perform with the contractor's own organization work amounting to at least 50 percent of the total contract amount as established in contractor's bid. Any items designated in the contract as "Specialty Items" may be performed by subcontract and the cost of such may be deducted from the total contract cost before computing the amount of work required to be performed by the contractor with the contractor's own organization.

The contractor shall indemnify the Department, its officers, and employees from any loss of any kind, including loss of funding, resulting from its failure to perform at least 50 percent of the total contract cost, as provided above.

By executing the contract, contractor acknowledges and agrees that a subcontract shall incorporate all applicable requirements and provisions of the contract between it and the Department, including the insurance requirements in 107.02, and that subcontracts do not relieve contractor of any of its obligations, liabilities, or guarantees under this contract or included bonds.

The contractor shall indemnify the Department, its officers, and employees from any loss of any kind, including loss of funding, resulting from the failure of any of its subcontractors to comply with the terms of this contract. Any such indemnification will be in addition to, if applicable, the terms of the Required Contract Provisions For DBE (or SBE) Participation In Federal Aid Construction Contracts.

Any failure by the contractor to comply with the Required Contract Provisions For DBE Participation In Federal Aid Construction Contracts may result, at the discretion of the Department, in a reduction of payment up to the full federal participation in said payment for any item(s) of affected work, whether or not the work itself is acceptable. Such reduction may not be applied to the payment of a DBE unless the DBE is the proximate cause of said reduction.

A subcontractor shall not further subcontract to a third party any portion of its authorized work, including work sublet to an authorized

Disadvantaged Business Enterprise but excluding acquisition of materials, without prior written consent from the Department's Compliance Program and Construction Division. If consent is given, the contractor will then be required to submit a OMF – 1A, Request to Sublet form to the Compliance section.

108.02 COMMENCEMENT OF WORK. The "Notice to Proceed" will stipulate the date on which the contractor shall begin work, which date shall be the beginning of contract time charges.

108.03 CONSTRUCTION PROGRESS SCHEDULE. Prior to or at the preconstruction conference and before beginning work on the project, the contractor shall submit to the project engineer a Construction Progress Schedule giving a satisfactory schedule of operations that provides for completion of the work within the contract time. This schedule shall be on the prescribed bar graph form. The contractor shall have copies of the schedule available at the preconstruction conference.

If the contractor's operations are affected by changes in the plans or amount of work, or if the contractor has failed to comply with the approved schedule, or if requested by the engineer, the contractor shall submit a revised Construction Progress Schedule for approval. This revised schedule shall show how the contractor proposes to prosecute the balance of the work. If a revised schedule has been requested by the engineer, the contractor shall submit the revised schedule within 14 calendar days after the date of request or progress payments may be withheld.

The approved Construction Progress Schedule will be used as the basis of establishing the controlling item of work, charging contract time and as a check on the progress of the work. The Construction Progress Schedule shall show only one controlling item of work for each contract day. If the Construction Progress Schedule has not been approved prior to the issuance of the Notice to Proceed, the engineer will establish the controlling work item and charge contract time accordingly.

108.04 PROSECUTION OF WORK.

108.04.1 General: The contractor shall provide sufficient materials, equipment, and labor to complete the project in accordance with the plans and specifications within the contract time. If the completed work is behind the approved progress schedule, the contractor shall take immediate steps to restore satisfactory progress and shall not transfer equipment or forces from uncompleted work without prior notice to, and approval of, the

engineer. Each item of work shall be prosecuted to completion without delay. If prosecution of the work is discontinued for five contract days, the contractor shall give the engineer written notice at least 24 hours before resuming operations.

108.04.2 Progress and Disqualification: The contractor's progress will be determined monthly at the time of each partial estimate, and will be based on the total amount earned by the contractor as reflected by the partial estimate. If the contractor's progress is more than 20 percent behind the elapsed contract time, the contractor may be notified that he is not prosecuting the work in an acceptable manner. If requested by the Department, the contractor must meet with and provide the project engineer with an acceptable written plan which details how the contractor will regain lost progress and prosecute the remaining work.

When a contractor has only one project with the Department, the contractor shall be disqualified once contract time has expired and the project is less than 90% complete. The contractor shall then remain disqualified until the project has been completed.

When a contractor has multiple projects with the Department, a contractor shall be immediately disqualified when:

(a) its progress on one project is 50 percent or more behind the elapsed contract time. In such case, the contractor shall remain disqualified until progress is within 10 percent of the elapsed contract time. Or,

(b) on two or more projects, contract time has expired and at least two such projects are less than 90% complete. The contractor shall remain disqualified until only one of the overdue projects remain incomplete, and it has achieved final acceptance of the other project(s).

Should the surety or the Department take over prosecution of a project, the contractor shall remain disqualified for a period of one year from Final Acceptance of the project, unless the contractor is debarred.

A contractor may also be disqualified for other causes as provided elsewhere in the contract. During the period of disqualification, except as provided elsewhere, the contractor will not be permitted to bid on Department contracts nor be approved as a subcontractor on Department projects. Any bid submitted by the contractor during the period of disqualification will not be considered and will be ruled irregular.

108.04.3 Disqualification Review Board: After disqualification, the contractor may submit a written appeal to the Chief Engineer. The written appeal shall be submitted within 7 days, excluding weekends and holidays, after issuance of written notice of disqualification and the contractor may either request a meeting with the review board or that the

review board consider a written appeal only. A meeting of the review board will be scheduled within 5 days, excluding weekends and holidays, after receipt of appeal.

The Department's review board will be composed of the Chief Engineer, or his designee, and five other members appointed by the Secretary. The Chief Engineer, or his designee, and two other members will constitute a quorum.

After all pertinent information has been considered, the contractor will be notified of the decision of the review board in writing within 5 days, excluding weekends and holidays. The decision of the review board will not operate as a waiver by the Department of its rights concerning the assessment of stipulated damages as specified under 108.08.

When the Department of Transportation and Development is not the contracting agency on a project, the contracting agency will make any disqualification determination and the contractor shall submit its appeal to the appropriate agency representative for that agency to address. The contracting agency will request that the Department concur with their decision prior to notifying the Contractor in writing. The DOTD's concurrence is advisory and will not make the DOTD a party to the contracting agency's construction contract.

108.05 LIMITATION OF OPERATIONS. The contractor shall conduct the work in such manner and sequence to assure the least interference with traffic. The contractor shall have due regard to the location of detours and provisions for handling traffic. The contractor shall not begin new work to the prejudice of work already started. The engineer may require the contractor to finish a section on which work is in progress before starting on additional sections if the finishing of such section is essential to public convenience and safety.

108.06 LABOR, MEANS, METHODS, AND EQUIPMENT. The contractor shall employ sufficient labor and equipment to prosecute the work to completion in accordance with the contract.

Workers shall have sufficient skill and experience to properly perform the work.

Any representative of the contractor or subcontractor who, in the opinion of the engineer, does not perform in a skillful manner or is disorderly shall be, upon written request, immediately removed by the contractor or subcontractor. A person removed shall not return to the work without written approval. If the contractor fails to remove such a person or

fails to furnish suitable and sufficient personnel to properly prosecute the work, the engineer may suspend the work by written notice.

Equipment proposed for use in the work shall be of sufficient size and in such mechanical condition as to meet requirements of the work and produce a satisfactory quality of work. No damage to the roadway, adjacent property or other highways shall result from the use of equipment.

When means, methods, and equipment are not specified, the contractor may use any means, methods, or equipment that will accomplish the work in conformity with the contract.

The contractor may request permission to use a means, method, or type of equipment other than specified in the contract. The request shall comply with 105.19.4 and shall include a description of the means, methods, and equipment proposed and the reasons for requesting the change. If approval is given, it will be on the condition that the contractor will be responsible for producing work in conformity with contract requirements. If, after trial use of the substituted means, methods, or equipment, the engineer determines that the work produced does not meet contract requirements, the contractor shall discontinue use of the substituted means, method, or equipment and shall complete the work with the specified means, methods, and equipment. The contractor shall remove the deficient work and replace it with work of specified quality or take other corrective action as directed. No change will be made in payment for pay items involved nor in contract time as a result of authorizing a change in means, methods, or equipment.

108.07 DETERMINATION AND EXTENSION OF CONTRACT TIME. The number of days allowed for completion of the work will be stated in the contract.

When the contract time is a fixed calendar date, it shall be the date on which all work on the project shall be completed.

The contract time for the work as awarded is based on the original quantities as defined in 102.05 and includes time to procure material, equipment and an adequate labor force to complete the work. If satisfactory fulfillment of the contract requires performance of work in greater quantities than those specified, or requires performance of extra work in accordance with 104.02 and the contractor requests additional contract time, the document authorizing or ordering alterations will show the number of additional days justified.

If the contractor finds it impossible, for reasons beyond the contractor's control, to complete the work within the contract time as specified or as extended in accordance with the provisions of this subsection, the

contractor shall, at the time the delay occurs make written request to the engineer for an extension of time setting forth therein the reasons which justify granting the request. Such written request shall conform to the requirements of EDSM III.1.1.28. If the request does not so conform, the contractor hereby agrees to and shall be deemed to have expressly waived any claim for such additional time. The contractor's plea that insufficient time was specified is not a valid reason for extension of time. If the engineer finds that the work was delayed because of conditions beyond the control and without the fault of the contractor, the engineer may extend the contract time in such amount as conditions justify.

Upon satisfactory final inspection, daily time charges will cease.

108.07.1 Working Day Contracts: On working day contracts, a working day will be charged when weather or other conditions not under the control of the contractor will permit construction operations to proceed for at least 5 continuous hours of the day or 65 percent of the normal work day, whichever is greater, with the normal working force engaged in performing the controlling item of work.

Should the contractor prepare to begin work on any day in which inclement weather, or the conditions resulting from the weather, prevent work from beginning at the usual starting time, and the crew is dismissed as a result, the contractor will not be charged for a working day whether or not conditions change during the day and the rest of the day becomes suitable for work.

No working days will be charged for the following days:

1. Saturdays and Sundays when no work is performed.
2. State recognized holidays that are defined as regular legal holidays or special holidays that are proclaimed by the Governor or fixed by the Legislature on which no work is performed.
3. Days on which delays, attributable solely to the Department or other governmental agencies, prevent contractor from proceeding with the controlling item of work at time of delay.
4. Days on which delays are attributable to the direct effect of strikes, riots or civil commotions.

When the contract time is on a working day basis, the engineer will furnish the contractor a monthly statement showing the number of days charged to the contract for the preceding month and the number of days specified for completion of the contract. The contractor will be allowed 14 calendar days in which to file a written protest setting forth in what respect said monthly statement is incorrect; otherwise, the contractor hereby agrees to abide by the monthly statement and shall be deemed under the contract

to have waived any claim that the monthly statement is incorrect.

If a protest is filed by the contractor, the Department will conduct such reviews and investigations as required to rule on the protest within 30 calendar days from the date the statement is furnished the contractor. The number of days charged as listed, or revised within the allotted time, shall become final at the end of this 30-day period, subject to change only through the claims process.

108.07.2 Calendar Day Contracts: When the contract time is on a calendar day basis, it shall consist of the number of calendar days stated in the contract beginning with the date stipulated in the Notice to Proceed. All calendar days will be charged contract time, including days elapsing between the effective dates of written orders to suspend work and to resume work for suspensions not the fault of the contractor. Contract time extensions will be granted for any delays for which the Department is responsible.

108.07.3 Excusable, Non-Compensable Delays: Excusable non-compensable delays are delays that are not the contractor's or the Department's fault or responsibility. The engineer will not grant additional payment for excusable, non-compensable delays, but will grant additional contract time.

108.07.4 Excusable, Compensable Delays: Excusable, compensable delays are delays that are not the contractor's fault or responsibility, but are the Department's fault or responsibility or determined by judicial proceeding to be the Department's sole responsibility or are the fault and responsibility of a local government. The contractor will be granted additional contract time and payment in accordance with 104.02, 105.18, and 109.04.

108.07.5 Non-Excusable Delays: Non-excusable delays are delays that are the contractor's fault or responsibility. All non-excusable delays are non-compensable.

108.07.6 Concurrent Delays: Concurrent delays are separate critical delays that occur at the same time. When a non-compensable delay is concurrent with a compensable delay, the contractor is entitled to additional time but not additional payment.

108.08 FAILURE TO COMPLETE ON TIME. For each calendar day including, but not limited to, adverse weather days and holidays that the work remains incomplete after expiration of the contract time, the sum specified in Table 108-1 will be deducted from payments for the work, not as a penalty but as stipulated damages, except for days DOTD directs in

writing as no work days.

Permitting the contractor to continue work after expiration of the contract time will not operate as a waiver by the Department of its rights under the contract. Contractor accepts, expressly assents, and does hereby confess judgment in favor of DOTD as to the daily charge amount set forth in Table 108-1.

Stipulated damages will be determined by the project's Original Contract Amount and the Average Daily Traffic (ADT) for the project's location. The ADT will be the traffic count as shown on the plans and the Original Contract Amount will be equal to the bid amount. The sum of Daily Charges (A) and (B) shown in Table 108-1 will be the assessed daily stipulated damages for each calendar day after expiration of the contract time.

Table 108-1
Stipulated Damages

Original Contract Amount	Daily Charge (A)
Million Dollars	Dollars
0 - 1	$ 500
>1 - 5	1,000
>5 -10	2,000
>10 - 15	4,000
>15 - 20	8,000
> 20	10,000

Traffic Volume	Daily Charge (B)
ADT x 1000	Dollars
0 -10	$ 500
>10 - 20	1,000
>20 - 30	2,000
>30 - 40	4,000
>40 - 50	8,000
>50	10,000

The contractor will automatically be subject to an assessment of stipulated damages by the expiration of contract time on the project. At any time stipulated damages are assessed, such damages shall be assessed continuously until the cause of such assessment ends, regardless of intervening circumstances.

The amount of assessed stipulated damages will be deducted from payments for the work under the contract or from any payments on any other contract the contractor has with the Department. The contractor hereby waives any requirement of written notice of default prior to any deduction for stipulated damages from any payments. The contractor and the surety shall be solidarily liable for stipulated damages in excess of any remaining amounts due the contractor under the contract.

108.09 DEFAULT OF CONTRACT. The contractor shall be in default, if the contractor:

1. Fails to complete the project within the contract time,
2. Becomes insolvent or a petition is filed in the Bankruptcy Courts of the United States under Chapters 7 or 13 of the Bankruptcy Code naming the contractor as debtor or conversion of a proceeding or petition from Chapter 11 to Chapter 7 or 13 of the Bankruptcy Code or seeks a forced respite under the laws of this State or similar debtor protection by courts of other states,
3. Allows any final judgment to stand unsatisfied for a period of 14 calendar days,
4. Makes an assignment or arranges for performance by others of all or part of the performance of the contract, other than by subletting pursuant to 108.01, without written approval and consent in advance of the Department, and the surety in the case of an assignment of the entire contract,
5. Makes an assignment of contract proceeds for the benefit of one or more creditors without prior written approval and consent of the Department; any such purported assignment will not be honored without evidence of compliance with this subparagraph,
6. Discontinues prosecution of the work,
7. Fails to begin work within 10 calendar days of either the “Notice to Proceed” or end of the Assembly Period,
8. Fails to perform with sufficient workers, equipment, or materials to assure prompt completion of the work,
9. Performs the work unsuitably or neglects or refuses to remove materials, or replace or repair rejected work,
10. Fails to resume discontinued or suspended work within 10 calendar days after notice to do so,
11. Fails to maintain licenses or certifications, or to acquire permits, necessary to accomplish the work;
12. Fails to perform the work in an acceptable manner, violates any

provision in the contract, or fails to follow any federal, state or local laws pertaining to performance,

13. Fails to follow federal, state or local laws, rules and regulations concerning construction safety and health standards or permits conditions upon the site of the work which are unsanitary, hazardous or dangerous to the health or safety of the contractor's workmen or the public, or

14. Is a party to fraud.

When one or more of these default events occur and circumstances warrant, the Department may give notice to the contractor of its intent to put the contractor in default under this subsection and specify a period of time in which the contractor shall cure the deficiency.

If circumstances do not warrant an opportunity to cure, or in the event the contractor fails to timely cure a default after notice, the Department will give written notice to the contractor, with a copy to the contractor's surety, of the Department's determination that the contractor is in default for any cause specified in this subsection and direct the surety to complete the work. Such notice removes the contractor’s right to proceed with the work and suspends payments to the contractor. Within thirty days of receipt of such notification, the surety shall present to the Department either a plan to assume performance of the contract and procure completion of the project, or provide the Department in writing with a reasonable response for the contractor's default. A response that fails to procure completion of the project shall not release the surety of its obligations under the performance bond as provided in the following paragraph.

If no completion plan is timely presented by the surety, or at any time if immediate action must be taken in the public interest or to protect the safety of the public or workers, the Department will take prosecution of the work out of the hands of the contractor or surety, may appropriate or use the materials and/or equipment on the project, or may enter into an agreement for completion of the contract or use other methods as required for completion of the contract in an acceptable manner. The surety shall then be responsible for payment to the Department of the cost of completion of the project and stipulated damages assessed by the public entity up to the total amount of the bond. If the surety has not timely completed the project and a court of competent jurisdiction has determined that the surety has unreasonably refused to take over the project, the surety shall be responsible for the payment of any stipulated damages for any delay in completion of the project as specified in the original contract and any reasonable attorney's fees and court costs incurred by the Department in collection of payments required by this subsection.

Nothing herein shall be construed to require or obligate the Department to suspend contract time or to release the obligation of the contractor and surety for stipulated damages in accordance with 108.08.

The costs incurred by the Department due to the contractor's default, including attorney's fees, or for completing the work under contract, will be deducted from any monies due or which may become due the contractor. When this expense exceeds the sum which would have been payable under the contract, the contractor and surety shall be liable and shall pay the Department the amount of such excess.

108.10 TERMINATION OF CONTRACTOR'S RESPONSIBILITY. The contract will be considered complete when all work has been satisfactorily completed, the final inspection made, and the work accepted by the DOTD Chief Engineer. The contractor will then be released from further obligation except as set forth in the contractor's payment/performance/ retainage bonds, 104.05, 107.17, 107.23, or as otherwise provided.

108.11 TERMINATION OF CONTRACT. The Department may, by written notice, terminate the contract or any portion thereof when, for reasons beyond either the Department's or contractor's control, the contractor is prevented from proceeding or completing the work as originally contracted, or when termination would be in the public interest. Such reasons for termination may include, but will not be limited to:

1. Executive orders of the President relating to prosecution of war or national defense;
2. National emergency which creates a serious shortage of materials;
3. Orders from duly constituted authorities relating to energy conservation; and
4. Restraining orders or injunctions obtained by third-party citizen action resulting from national or local environmental protection laws or where the issuance of such order or injunction is primarily caused by acts or omissions of persons or agencies other than the contractor.

When a contract, or a portion thereof, is terminated before completion of all items of work in the contract, payment will be made for the number of units or items of work completed at the contract unit price, or as mutually agreed for items of work partially completed or not started. No claim for loss of anticipated profits will be considered.

Reimbursement for organization of the work, and other overhead expenses (when not otherwise included in the contract), and moving

equipment and materials to and from the project will be considered.

Acceptable materials obtained or ordered by the contractor for the work that are not incorporated in the work shall, at the option of the contractor, be purchased by the Department at actual cost as shown by receipted bills and actual cost records at such points of delivery as designated.

Termination of a contract or a portion, thereof, shall not relieve the contractor of responsibility for the completed work, nor shall it relieve the surety of obligation for any just claim arising from the work performed.

108.12 TERMINATION OF CONTRACT FOR CONVENIENCE. The Department may, by written notice, terminate the contract or any portion thereof for the Department's convenience and without cause. Upon receipt of written notice from the Department of such termination, the contractor shall cease operations as directed by the Department in the notice and complete work not terminated; take actions necessary, or those that the Department may direct, for the protection and preservation of the Work; place no further subcontracts or order materials, services, or facilities, except as approved by the Department to complete any remaining portion of the contract; terminate all existing subcontracts and purchase orders to the extent they relate to terminated work; deliver to the Department any unfabricated or partially fabricated parts, work in progress, completed work, supplies, and other material produced or acquired for the work terminated; coordinate a time and date with the engineer to inventory materials obtained but not yet used for the project; deliver all completed or partially completed plans, drawings, information, and other property required to be furnished to the Department if the contract had been completed.

In case of such termination for the Department’s convenience, the contractor shall be entitled to receive payment for (1) the quantity of units or items of work completed at the contract unit price, and, as mutually agreed, for items of work partially completed, and (2) reasonable direct labor costs and non-labor cash expenditures incurred for unplanned termination related activities described above.

The Department will not be liable for destroyed, stolen, or damaged material; unliquidated advance or other payments to third parties under the terminated portion of the contract; or the agreed upon price or the proceeds from the sale of any materials, supplies, or other items acquired and sold, or retained, by the contractor. In addition, the Department will deduct from any termination payment any claim the Department has against the contractor under the Contract.

Acceptable materials obtained or ordered by the contractor for the work that are not incorporated in the work shall, at the option of the contractor, be purchased by the Department at actual cost as shown by receipted bills and actual cost records at such points of delivery as designated.

Termination of a contract or a portion thereof, shall not relieve the contractor of responsibility for the work completed, nor shall it relieve the surety of any obligation for any just claim arising from the work performed.

Section 109
Measurement and Payment

109.01 MEASUREMENT OF QUANTITIES. All work completed under the contract will be measured according to United States standard measure. The International System of Units, generally known as SI or metric units will be used only if quality control or acceptance testing must be conducted under those standards. Standard practice used in these specifications will be to show values in the United States standard measure units, except for Part X, Materials, where both systems of measure are shown. Applicable units of measure will be defined in the table or figure titles. The terms weight and mass can be used interchangeably in these specifications if SI units are used.

The engineer shall be the judge of the accuracy of measurements, or approximations made in lieu of accurate determinations and these decisions shall be binding upon both parties.

When project specifications or plans indicate that quantities for certain pay items have been computed with sufficient accuracy for payment, the pay quantities for those items will be the design quantities subject to the following adjustments. Design quantities will be adjusted if the engineer makes changes to fit field conditions, if plan errors are proven, or if design changes are necessary.

When measurement of excavation and embankment is based on a cubic yard, the design quantities will be verified or revised in accordance with Departmental policy.

Longitudinal measurements for area computations will be made horizontally. Transverse measurements for area computations will be the neat dimensions shown on the plans or ordered in writing.

Structures will be measured according to neat lines shown on the plans or as directed.

Items measured by the linear foot, such as pipe culverts, underdrains, etc., will be measured parallel to the foundation upon which such structures are placed.

In computing volumes of excavation, the average end area method or other acceptable methods will be used.

Thickness of plates and galvanized sheet metal used in the manufacture of corrugated metal pipe and metal plate pipe culverts and arches will be measured in decimal fractions of inches.

When United States standard units are used, the pound or the ton will be

the standard units of weight. The term “ton,” in the United States standard, will mean the short ton of 2,000 pounds avoirdupois. Materials measured or proportioned by weight shall be weighed on approved scales by qualified personnel at designated locations. If material is shipped by rail, the car weight may be accepted provided the weight of material only will be paid for; however, car weights will not be acceptable for material to be passed through mixing plants. Trucks used to haul material being paid by measured weight shall be weighed empty at such times as directed; and each truck shall bear a plainly legible identification mark.

Materials specified to be measured by volume in hauling vehicles shall be hauled in approved vehicles and will be measured therein at the point of delivery on the project. Vehicles may be of any acceptable size or type, provided the body is of such shape that the volume can be readily and accurately determined. Vehicles shall be loaded to at least a predetermined permanently fixed mark, which defines a known volume, upon arrival at the point of delivery. Vehicles will be measured in increments of 0.5 cubic yard, except that when tailgate spreader boxes are used to place aggregate materials for asphalt surface treatment, the volume of the spreader box will be added to the volume of the vehicle. When materials are measured by weight and converted to volume for payment, conversion will be made to the nearest 0.1 cubic yard.

Asphalt materials will be measured by the gallon or by the ton. When specified, volumes of liquid asphalt materials will be converted to gallons at 60°F (liters at 15°C) in accordance with DOTD TR 321.

Net certified scale weights or weights based on certified volumes (in the case of shipments by rail, truck or other transport) will be used as a basis of measurement, subject to correction when material has been lost in transit, wasted or otherwise not incorporated in the work.

When asphalt materials are shipped by truck or transport, net certified weights or volume, subject to correction for loss or foaming, may be used for computing quantities. Portland cement will be measured by the ton.

Timber will be measured by the thousand feet board measure (MFBM) incorporated in the structure. Measurement will be based on nominal widths and thicknesses and the length of each piece.

The terms “lump sum, each, or unit” when used as a unit of measure for payment will mean complete payment for the work described in the contract.

When a complete structure or structural unit is specified as the unit of measurement, the unit of measurement will include the necessary fittings and accessories. Incidental work associated with the structure or structural

unit will not be measured for payment.

When standard manufactured items are specified, and these items are identified by gage, unit weight, section dimensions, etc., such identification will be considered to be nominal weights or dimensions. Unless more stringently controlled by tolerances in cited specifications, manufacturing tolerances established by the industries involved will be accepted.

When conversion is necessary from United States standard units to International System of Units (SI units) or from SI units to U. S. Standard units the guidelines, terminology, conversion factors, and rules for rounding in the Standard Metric Practice Guide, AASHTO R1 will be used.

109.02 SCOPE OF PAYMENT. The contractor shall receive and accept compensation as provided in the contract as full payment for furnishing materials and for performing work in an acceptable manner and for all risk, loss, damage or expense arising out of prosecution of the work, subject to the provisions of 107.23, 108.08, and 108.09. All work on Pay Items must be subject to inspection by Department personnel. Any work performed without being subject to inspection by Department personnel may not be measured or paid.

Contractor accepts the summation of the product of the unit prices bid on the schedule of items, or as altered by change order, multiplied by the actual quantity placed or performed for each such item per its unit measure, as audited by DOTD, as full, complete, and final compensation under the contract for all work, labor, materials, and other direct costs; indirect expenses and overhead; and any attained profit. Only those quantities for each item necessary to complete the project, as adjusted by any change orders approved by the DOTD Chief Engineer or designee, will be compensated.

When the "Payment" clause in the specifications relating to any unit price in the Schedule of Items requires that the said unit price be considered compensation for certain work, such work will not be measured nor payment made under any other pay item.

109.03 COMPENSATION FOR ALTERED QUANTITIES. When contract quantities are altered in accordance with 104.02, or when final quantities vary for other reasons from the quantities in the Schedule of Items, the contractor shall accept as payment in full, payment at the contract unit prices for the accepted quantities of work done. No allowance, except as provided hereinafter, will be made for any increased expense, loss of expected reimbursement or loss of anticipated profits

claimed by the contractor resulting either directly from such alterations or indirectly from unbalanced allocation among the pay item expenses of the contractor for labor, materials, equipment, subcontractor costs, profits and overhead and subsequent loss of expected reimbursements therefor or for other cause.

When alterations of quantities are caused by alteration in the plans, and such alterations affect the methods or sequence of construction, an allowance will be made, either for or against the contractor, in such amounts and basis as agreed to in advance of the performance of the work. The change order authorizing or ordering the work shall show how the allowance was derived. Except when otherwise authorized by the Chief Engineer, such derivation shall show, as a minimum, breakdown of costs as detailed in 109.04.3.1 through 109.04.3.7, except that projected costs rather than actual costs will be used, along with the mark-up provided in 109.04, as full and final compensation for all related jobsite and home office overhead, and any profit.

When alterations in quantities result in an increase or decrease of more than 25 percent in the contract quantity as awarded on any “Major Item” of the contract, a supplemental agreement to the contract may be executed between the Department and the contractor at the request of either party, prior to performance of any work in excess of 25 percent of the contract quantity. A “Major Item” is an item included in the contract as awarded with a total cost equal to or greater than 10 percent of the original total contract amount.

Any adjustment in unit price will be made on only that portion of the Major Item exceeding 125 percent of the original item quantity. In the case of a decrease of a Major Item by 25 percent or more, the entire remaining portion of the item quantity will be adjusted. The actual costs shall be itemized in accordance with 109.04.03.1 through 109.04.3.7, except that projected costs may be used in case of an increase in quantity. When a supplemental agreement or change order is executed for an adjustment in unit price, the consent of the contractor's surety shall be obtained by the contractor and furnished to the engineer.

A “Minor Item” is an item included in the contract as awarded with a total cost of less than 10 percent of the original total contract amount. A minor item shall become a major item if it is increased by such an amount that its total cost is equal to or greater than 10 percent of the original total contract amount. If a minor item is increased to the extent that it becomes a major item, only that part of the item that exceeds 12.5 percent of the original total contract amount will be considered on any change order

and/or special agreement. The agreement shall be executed prior to performance of any work in excess of 12.5 percent of the contract amount. The requirements of the special agreement shall be as described above for increases in major items. Except as provided in this paragraph, if a minor item is increased or decreased, no adjustment will be made in its unit price.

109.04 COMPENSATION FOR ALTERATIONS OF THE CONTRACT. Payment for work performed in accordance with 104.02 and 105.19 will first be made at the contract's established unit prices. If unit prices are not applicable, the second basis of payment will be negotiated prices agreed to by change order prior to the start of the work. If an acceptable negotiated price cannot be established prior to the work being performed, the Department may require the contractor to perform the work on a "force account" basis.

109.04.1 Unit Prices: When payments are made at the contract's established unit prices, and the work requires a material change in construction method or sequence, adjustment to the unit prices for or against the contractor shall be made in accordance with 104.02 and 109.03.

109.04.2. Negotiated Prices: The Department's objective is to compensate the contractor using the same pricing formulas established by the contractor in determining the original bid contract prices. Therefore, reasonable rates for labor burden, company owned equipment internal cost recovery rates, jobsite overhead items and rates, home office overhead and profit mark-up on direct costs, and other pricing components established by the contractor at the time the original contract bid prices were determined will also be used in determining the negotiated prices for the change order work. The change order authorizing the work shall include a detail cost breakdown showing direct labor, materials, equipment, and subcontractor costs, as well as each of the pricing components listed above.

In order to facilitate the identification of the original contract bid prices and the detailed cost breakdown used in bid preparation, the contractor is encouraged to place their original bid estimate preparation documents, working papers, and notes in "escrow" upon executing the awarded contract and provide the Department proof of such placement in accordance with 103.06. If this action is undertaken, the contractor is required to prepare the "Summary of Key Bid Pricing Formula Elements" form, which is to be included with the escrowed bid estimate work papers and notes as its first summary document. When the contractor and the Department choose to utilize Negotiated Prices to resolve change order amounts for extra work, claims for additional compensation, or other

contract price modifications, the escrowed documents and information will be open to department review to verify the original bid estimate pricing formulas and information, and then used to price the change order. The specific escrow procedures, documents to be escrowed, and the "Summary of Key Bid Pricing Formula Elements" form shall conform with the requirements of the Department.

109.04.3. Force Account: When "force account" is the method of payment, the contractor shall be paid the direct cost of the work as determined and documented in 109.04.3.1 through 109.04.3.7 below. Jobsite and home office overhead indirect expenses, and profit for all parties shall be considered fully compensated by a 15 percent mark-up on allowable direct cost items described in109.04.3.1 through 109.04.3.4 below, and the mark-up on direct cost for the subcontractor and contractor described in 109.04.3.5 below. The Department may consider additional reimbursement to the contractor for indirect fixed jobsite overhead costs for excusable compensable delays as defined in 108.07.4 when the change order results in extension of the project's critical work path and the 15 percent mark-up on direct costs is deemed by the Department to be insufficient.

109.04.3.1 Direct Labor: For labor and working foremen in direct charge of operations, the contractor shall receive the wage rates agreed on in writing before beginning work for each hour that said labor and foremen are engaged in such work. Jobsite and home office supervisory personnel shall not be included as direct labor.

The contractor shall receive the actual costs paid to, or in behalf of, workers for subsistence and travel allowances, health and welfare benefits, pension fund benefits or other benefits when such amounts are required by collective bargaining agreement or other employment contract applicable to the classes of labor employed on the work, but limited to a maximum daily rate for subsistence and travel allowances. This maximum shall be agreed upon prior to the contractor incurring such charges.

109.04.3.2 Direct Materials: For materials accepted by the engineer and used, the contractor shall receive the actual cost of such materials delivered to the work, including transportation charges and sales taxes if applicable.

109.04.3.3 Equipment: For authorized machinery or special equipment the contractor shall receive the rental rates agreed on in writing before such work is begun. For equipment rented from independent outside sources, the contractor will be reimbursed the reasonable actual cost as shown on paid rental invoices. For company owned equipment, the

contractor will be reimbursed his internal cost recovery equipment charge rate consistent with his original bid cost estimates. The Department's Engineering Directives and Standards Manual, EDSM III.1.1.27, entitled Equipment Rental Rates, provides additional guidance concerning allowable equipment rental rates and their application. If the contractor chooses to use a rental rate guide book instead of his internal cost recovery rates to establish rental rates for company owned equipment, adjustments to the allowable type of equipment and hours per day must be made as described in the EDSM. In addition, no 15 percent mark-up on equipment direct cost for jobsite and home office overhead expenses and profit will be allowed if the contractor chooses to use rental rate guide book prices instead of his internal cost recovery rates.

109.04.3.4 Bond, Insurance and Tax: For property damage, liability and workmen's compensation insurance premiums, unemployment insurance contributions, social security taxes, and bond costs on force account work, the contractor shall receive the actual cost thereof. The contractor shall furnish satisfactory evidence of the rates paid for such bond, insurance and tax.

109.04.3.5 Subcontractor Costs: For change order work performed by an approved subcontractor, the subcontractor shall receive the subcontractor’s actual and reasonable allowable direct cost of such work as described in 109.04.3.1 through 109.04.3.4 above plus a 15 percent mark-up for the subcontractor’s indirect jobsite and home office overhead expenses and profit. In addition, the contractor will be paid a 10 percent mark-up on the subcontractor’s total direct and indirect costs, and profit for general supervision and sequencing of the change order work.

109.04.3.6 Non-allowable Costs: No additional contractor cost reimbursement will be made for general superintendence, small tools or craft specific tool allowances, or other direct or indirect costs not specifically included in 109.04.3.1 through 109.04.3.5 above.

109.04.3.7 Statements: No payment will be made for force account work until the contractor has furnished the engineer with duplicate itemized statements of the cost of such work detailed as follows:

1. Name, classification, date, daily hours, total hours, rate, and extension for each laborer and foreman.
2. Designations, dates, daily hours, total hours, rental rate, and extension for each unit of machinery and equipment.
3. Quantities of materials, prices, and extensions.
4. Transportation of materials.
5. Cost of property damage, liability, and workmen's compensation

insurance premiums, unemployment insurance contributions, social security taxes, and bond costs.

The contractor's representative and the engineer shall compare records of the cost of work done as ordered on a force account basis. Such comparison shall be made daily. Statements shall be accompanied by invoices for materials used and transportation charges. If materials used on force account work are not purchased for such work, but are taken from the contractor's stock, in lieu of invoices, the contractor shall furnish an itemized list of such materials showing that the quantity claimed was actually used, and that the price and transportation costs claimed represent the actual cost to the contractor. Invoices shall be accompanied by the contractor's notarized statement that payment in full has been made for the materials.

109.05 PARTIAL PAYMENTS. Provided the work is prosecuted in accordance with the provisions of the contract and with satisfactory progress, the engineer will make the first progress estimate within 2 months from the date indicated to begin work in the Notice to Proceed. The Department will determine the progress estimate date. Each successive progress estimate will be made on this same date of each month thereafter until completion of the contract. Each progress estimate will be an approximation of the value of work performed up to the date the estimate is made. Prior to the progress estimate date the contractor will be allowed to review the progress estimate with the engineer.

Monthly estimates will be approximate and subject to correction in subsequent estimates.

If an election has been made to have retainage withheld from contract payments due the contractor in accordance with 103.05, the Department will deduct from the monthly payment estimate an amount equal to five percent of the monthly payment estimate. In addition should defective work or material be discovered or reasonable doubt arise as to the integrity of any part of the work prior to final acceptance and payment, an amount will be deducted from subsequent estimates equal in value to the defective or questioned work. Payment for this work will not be included in subsequent estimates until defects have been remedied or causes for doubt removed.

Payment of the monthly estimate shall not be taken as an admission that the work is done or that its quality is satisfactory, nor as a release of the contractor from the responsibility for any portion thereof, but the whole work and all particulars relating thereto shall be subject to revision and

adjustment by the engineer at the time of final acceptance, or at any time thereafter pursuant to contract provisions including, but not limited to, the Department's audit of the project.

109.06 PAYMENT FOR STOCKPILED OR STORED MATERIAL.

109.06.1 General: Payment for stockpiled or stored material will be considered only for materials anticipated to be stored for periods in excess of 30 calendar days. When approved, advance payments may be made for fabricated or natural materials that are to be incorporated in the project when stockpiled materials are stored on the project or in a dedicated stockpile at an approved site outside the limits of the project within the State of Louisiana. Payments shall be limited to durable materials described herein and shall represent a significant portion of the project cost. Perishable articles and small warehouse items are not included. These materials shall meet the requirements of the specifications. Payment for stockpiled or stored materials will not constitute acceptance. It shall be the contractor's responsibility to protect the material from damage while in storage.

Payment for materials stored outside the State of Louisiana will be considered, subject to approval of the Chief Engineer. This will generally be limited to adjacent states, except in cases where it will be in the best interest of the Department to pay for these materials. If payment for stockpiled materials outside the State will affect the bid price for an item, the contractor shall submit a written request to the Chief Engineer prior to bidding.

Payment may be made for the invoice price for the materials, which shall not exceed 85 percent of the contract price for the items where the materials are to be incorporated. For fabricated materials purchased from commercial sources and delivered to approved storage, partial payment may be the invoice price plus freight and taxes. The quantity of material for payment will not exceed the total estimated quantity required to complete the project.

The amounts advanced on stockpiled or stored materials will be recovered by the Department through deductions made on payments as the materials are incorporated in the work.

Partial payment for stockpiled materials shall be requested by the contractor in writing and the following documents shall be furnished:

1. A copy of the invoices from supplier or manufacturer verifying the cost and quantity of material.

2. If storage is on private property, a copy of the lease or agreement

granting the Department right of entry to property.
Within 30 calendar days after payment by the Department, the contractor shall submit a certified copy of invoices from the supplier for each item for which payment has been made. All such invoices submitted shall state the amount received by the supplier as payment in full for the materials. If this certification of payment is not presented within the 30-day period, the advanced payment will be deducted from future progress payments.

Title and ownership of materials for which advancements have been made by the Department shall not vest in the Department until such materials are incorporated in the work and the work accepted by the Department. The making of advancements by the Department shall not release the contractor from the responsibility for any portion thereof.

109.06.2 Fabricated or Manufactured Materials: Fabricated or manufactured materials may include but is not limited to the following:

Structural steel, fabricated structural steel items, steel piling; reinforcing steel; electrical equipment; mechanical equipment; precast concrete items; structural timber; timber piling; fencing and guard rail materials; fabricated sign structures and sign panels.

109.06.3 Other Material: These materials will normally be large quantities of natural or manufactured aggregate. The contractor's request for payment of stockpiled natural material shall give a detailed description of the material, its intended use and location of the site. This material will be inspected and approved after placement in stockpiles on the project. Approval of the stockpiled material will be in writing.

109.07 ADJUSTMENT FOR CHANGES IN COMMON CARRIER RATES. It is agreed that the accepted proposal for the work is based on common carrier rates on file with the Surface Transportation Board (STB) or with a corresponding intrastate commission or body in effect on the date of opening of bids. Payments to the contractor will be adjusted upon request to compensate for increases in cost due to changes in common carrier rates becoming effective after the date of opening of bids and before expiration of the contract time. The adjustment shall be limited to an amount determined as follows.

The adjustment shall be the product of the increase in common carrier rates multiplied by the net quantity of material shipped at the new rates to the work and incorporated therein, all as shown by receipted common carrier bills.

If the freight cost by common carrier to the job site is included in the quotation by the supplier to the contractor, in addition to receipted freight

bills, the supplier shall furnish on each invoice a breakdown showing the freight rate, quantity of material and total freight cost. The contractor shall furnish the supplier's written quotation made prior to the date of bid opening and a notarized statement that the increased freight rate has been paid.

The contractor's request for payment adjustment due to increased common carrier rates shall be submitted as soon as possible after shipments to the project have been completed. Only one request for such payment adjustment shall be made for each project, and any payment adjustment due the contractor for increased common carrier rates will be included in the final estimate for the project. No request for such payment adjustment will be considered unless submitted to the Department, with the required receipted bills and forms, within 30 calendar days after final acceptance.

109.08 ACCEPTANCE AND FINAL PAYMENT. Upon acceptance of the work, the Chief Engineer will execute a certificate that the work provided for in the contract has been completed and accepted under the terms of the contract. The Certificate of Acceptance will be recorded in the office of the Recorder of Mortgages of the parish in which the work has been done. The entire balance due the contractor, including the amounts withheld as retainage in accordance with 103.05, will be paid to the contractor after the Department has determined that quantities shown on the final estimate are correct; however, before payment of the final estimate, the contractor shall submit to the Department a certificate from the Recorder of Mortgages of the parish in which the work has been done to the effect that there are no claims or liens recorded against the contract. The date of the certificate shall not be prior to the expiration of 45 calendar days, but shall be prior to the expiration of 90 calendar days, after the Certificate of Acceptance was recorded in the Mortgage Office.

Prior to payment of the final estimate, all releases or waivers on buildings, wells, utilities and railroads shall be furnished as well as any maintenance bonds, certificates from Health Department, tracings, brochures or other items required by the contract.

Payment of the final estimate shall not release the contractor or sureties from liability as provided in the Contract and contract documents or for any fraud in construction, or in obtaining progress payments, or in payment for materials, labor or other supplies or services for the work, or for any claims for damages, loss or injury sustained by any person through the fault, negligence or conduct of the contractor or any of its employees, agents, subcontractors, suppliers or representatives.

PART II – EARTHWORK AND SITE PREPARATION

Section No. **Page No.**

201 Clearing and Grubbing 114
202 Removing or Relocating Structures and Obstructions 116
203 Excavation and Embankment 129
204 Temporary Erosion Control 144

Section 201
Clearing and Grubbing

201.01 DESCRIPTION. Clear, grub, and remove vegetation and debris within the limits of the right-of-way and easement areas, except such items that are designated to remain or to be removed under other pay items.

Cut trees, logs, brush, stumps and debris; excavate and remove stumps, roots, submerged logs, snags, and other vegetative or objectionable material; dispose removed material in accordance with 202.02; and clean the area.

Quality assurance requirements shall be as specified in the latest edition of the Department's publication titled *Application of Quality Assurance Specifications for Embankment and Base Course.*

Erosion control shall be in accordance with Section 204.

201.02 MATERIALS. Vacant

201.03 GENERAL CONSTRUCTION REQUIREMENTS. Preserve the items to remain as designated by the engineer. Do not store equipment, materials, and supplies in proximity of items designated to remain. Remove trees without damaging items marked to remain. Repair damage to bark, trunks, limbs, or roots of vegetation marked to remain using horticultural and tree surgery practices published by the American Association of Nurserymen (AAN) under the supervision of a licensed landscape arborist at no cost to the department. Do not fell trees outside of the right-of-way. Damage outside the right-of-way caused by the contractor's operations shall be the contractor's responsibility.

201.04 CLEARING AND GRUBBING. Clear and grub to the limits of the right-of-way, or to the construction limits, whichever is greater, unless otherwise designated on the plans. When fencing or utility relocation is required, an area 10 foot wide, adjacent to and inside the right-of-way line, shall be cleared and grubbed. Mow when required by the engineer. Some loose limbs and roots approximately 2 inch x 2 foot and smaller may be allowed to remain; however, excessive amounts will not be allowed.

Explosives, when used, shall be in accordance with 107.11.

Fill stump holes and other holes left from clearing and grubbing by blading the area and backfilling with existing materials or soil complying with 203.06.1 and compact to a condition similar to surrounding soils.

Submit a plan for burning operations to the engineer for review and comment. Burning of materials shall not jeopardize anything designated to

remain on the right-of-way, the surrounding forest cover, or other adjacent property. Burn in accordance with all laws and ordinances, including, but not limited to, the current regulations of the Louisiana Department of Environmental Quality and 107.13 and 107.14.

Remove materials and debris which cannot be burned and materials which are not burned from the right-of-way and dispose of in accordance with 202.02.

Merchantable timber in the area to be cleared, not removed from the right-of-way prior to the beginning date stipulated in the Notice to Proceed, becomes the property of the contractor.

Remove low hanging branches and unsound or unsightly branches on trees or shrubs designated to remain as directed. Trim branches of trees extending over the roadbed to a height of 20 foot above the pavement in accordance with accepted horticultural and tree surgery practices published by AAN.

201.05 MEASUREMENT. No measurement of area will be made for payment.

201.06 PAYMENT. When a pay item is included in the contract, payment for clearing and grubbing will be made at the contract lump sum price. Partial payment will be limited to 10 percent of the original total contract amount until the contractor has earned 40 percent of the original total contract amount. When clearing and grubbing consists of more than 50 percent of the contract amount, payment will be made for the work completed.

Payment will be made under:

Item No.	Pay Item	Pay Unit
201-01	Clearing and Grubbing	Lump Sum

Section 202
Removing or Relocating Structures and Obstructions

202.01 DESCRIPTION. This work consists of the removal or the relocation of structures, facilities or obstructions, hereinafter referred to as "structures" from the project right-of-way unless specified otherwise.

The removal of a structure from the project right-of-way is the razing, demolishing, and disposal of the structure after salvageable parts, components, and materials, as designated on the plans, have been recovered by the contractor.

The relocation of a structure from the project right-of-way is its movement, reassembly, restoration, reconstruction, or equivalent replacement at a new location outside of, and adjacent to, the project right-of-way including all service connections, appurtenances, and accessories as directed.

For the purposes of this section, remove structures and obstructions visible at the time of bid, including all related structures or as designated in the plans. Structures may include buildings, floor slabs, foundations, fuel tanks, septic tanks, fences, pipes, bridges, drainage structures, pavements, walks, curbs, abandoned pipelines and other similar facilities, or obstructions not designated or permitted to remain within the project right-of-way. This work also includes backfilling of resulting trenches, holes, and pits. If structures or obstructions are encountered which differ materially from those ordinarily encountered, the provisions of 105.18 shall apply.

Quality assurance requirements shall be as specified in the latest edition of the Department's publication titled *Application of Quality Assurance Specifications for Embankment and Base Course.*

Erosion control shall be in accordance with Section 204.

202.02 GENERAL CONSTRUCTION REQUIREMENTS. Remove and dispose of all portions of structures or obstructions on the right-of-way, except items for which other provisions have been made for removal or relocation. When specified, remove structures and appurtenances that extend beyond the right-of-way or that are entirely on private property. Remove specified salvageable material in sections which may be readily transported without unnecessary damage. Stack salvageable material at specified storage areas. When no storage sites are specified, deliver salvaged

materials to the nearest dotd maintenance unit. Dispose of materials not specified to be salvaged off the project right-of-way outside the view of the traveling public with written permission of the property owner on whose property the material is placed. Furnish copies of agreements (including rights of entry, etc.) With property owners to the engineer prior to beginning of work. The agreement must contain language holding the department harmless regarding any liabilities of the contractor or property owners. A certificate of release from the property owner will be required before final acceptance. Fill holes left by structure removal or the removal of materials associated with contaminated soils or sites by blading the area with surrounding soil or backfilling with soil complying with 203.06.1. Compact to a condition similar to the surrounding soils or as directed.

If any fuel storage tanks or other environmentally sensitive or contaminated sites are located during construction, stop construction activity in the immediate vicinity of the environmentally sensitive or contaminated site and notify the project engineer who in turn will notify the Department's Materials and Testing Section immediately for guidance. Testing and clean-up by the contractor shall be coordinated with the Materials and Testing Section.

The Department reserves the right to eliminate work items in accordance with 104.02.4.

202.03 REMOVING STRUCTURES. Unsalvageable materials in a structure designated for removal shall become the property of the contractor and shall be removed and disposed of by the contractor.

Demolish and remove appurtenances forming a part of a structure to be demolished, whether integral or not integral to the structure. Demolish and remove washhouses, garages, cisterns, and other buildings and appurtenances used in conjunction with a structure in the same manner as the structure. Remove existing yard fences, drives, walks, and shrubbery. The above are all considered part of the structure to be demolished and removed.

Plug and seal all abandoned water wells in accordance with 202.06.

Demolishing of a structure, any part of which is used as a service station, shall include the removal of gasoline pumps, tanks, pipes, signs and other appurtenances. Remove underground fuel tanks in accordance with 202.05.2. Existing underground fuel tanks shall not be reused or used for other purposes.

Remove and dispose of material in existing foundations, concrete or masonry floors, chimneys, and other appurtenances.

Remove and dispose of cattle pens, cane derricks, cattle guards, or other such structures.

202.03.1 Pavement, Base Courses, Walks, and Curbs: Dispose of pavements, stabilized or treated base courses, walks, curbs, and gutters, designated for removal as shown on the plans and as directed.

When the existing shoulder underdrain at the pavement edge is to remain in place and in service but removal of the shoulder surfacing and base is required, do not damage the existing shoulder underdrains. Damaged shoulder underdrains shall be satisfactorily repaired at no direct pay.

202.03.2 Pipe: Remove and store pipe that is to be re-laid so that there will be no loss or undue damage before relaying. Replace sections lost from storage or unduly damaged at no direct pay. When specified, pipe not to be re-laid and considered usable shall be salvaged, cleaned of soils or other materials, stored and stacked.

202.03.3 Bridges and Drainage Structures: Bridges, including approach slabs, and drainage structures in use by traffic shall not be removed until satisfactory arrangements have been made to accommodate traffic.

Unless otherwise directed or shown on the plans, remove substructures to natural stream bottom and those parts outside the stream to one foot below natural ground surface. Remove existing structures within the limits of a new structure as necessary to accommodate construction of the new structure.

Dismantle steel or wood bridges to be salvaged without unnecessary damage. Dismantling shall include stripping all hardware. Match-mark structural members before dismantling.

Explosives, when used, shall be in accordance with 107.11. Complete blasting or other operations necessary for removal of an existing structure or obstruction, which may damage new construction, prior to placing the new work.

202.04 RELOCATING STRUCTURES. Place structures to be relocated in their new locations as directed and restore to their original condition. Place structures to be relocated on foundations of the same type and character as the original foundations.

Relocate appurtenances forming a part of a structure to be relocated, whether integral or not integral to the structure, in the same manner as the structure. Relocate or replace appurtenances associated with the structure as directed with appurtenances of the same size, type, and character as existed before the structure was relocated.

Disconnect sanitary sewers, water, gas, electric, television cable, and telephone service lines connected to structures being relocated and reconnect as quickly as possible. The contractor shall be responsible for all notices to public utility companies and for all fees charged by them. Relocate existing yard fences, drives, and walks; extend same as necessary. Remove and replant existing shrubbery at new locations as designated. All of the above shall be considered as appurtenances not integral to the structures to be removed and relocated.

Remove material in existing foundations, concrete or masonry floors, chimneys and other appurtenances, when not used in reconstruction of appurtenances, and dispose of in accordance with 202.02. Furnish new material required in performing any of these operations at no direct pay.

Relocate contents of structures with the structure to its new site. When not feasible to relocate structures with contents therein, remove the contents from the structure at its original location and properly store and replace in the relocated structure without damage or loss to contents.

Relocate cattle pens, cane derricks, cattle guards, or other such structures on or beyond the right-of-way line as directed. Use materials in structures suitable for reuse in their reconstruction. Furnish new materials similar in kind to that in place at no direct pay, including foundations.

Prior to removal of butane or propane gas tanks, obtain the written approval of the Louisiana Liquefied Petroleum Gas Commission. Do not use or reuse existing underground butane or propane gas tanks for other purposes. The Department will reimburse the contractor for the cost of the new tank when the contractor presents the original receipted bill.

Furnish the engineer a Certificate of Release from each property owner; in case of separate ownerships of structure and property, furnish a Certificate of Release from each owner. This certificate shall state that the relocated structures are in an acceptable condition and that said owner waives all claims for damages to the property and structures relocated. When a Certificate of Release cannot be secured from the property owner, submit to the engineer a notarized letter documenting the inability to obtain the release.

202.05 REMOVING ENVIRONMENTALLY SENSITIVE MATERIALS. When removal or remediation of any environmentally sensitive or contaminated sites is required during construction, coordinate construction operations through the materials and testing section. If failure to follow the guidelines of the materials and testing section subsequently

causes or increases harm or damage to the environment, then all resulting fines and clean-up costs shall be the responsibility of the contractor.

202.05.1 Asbestos: When information is available, the Department will indicate on the plans which structures contain friable or non-friable asbestos. When a structure is identified on the plans or discovered on the project to contain asbestos and will be demolished or renovated, contact the Materials and Testing Section to coordinate disposal prior to commencing asbestos removal. Use a certified asbestos abatement contractor for proper removal and disposal. All applicable requirements for proper handling of asbestos material shall then be followed by the contractor for the continued removal of the asbestos containing material. Notify the Department of Environmental Quality (DEQ), Air Quality Division through the use of the proper notification form, DEQ AAC2, at least 10 calendar days prior to initiation of demolition or renovation of structure(s). The contractor shall maintain and furnish to the engineer, all records pertaining to the disposal of the asbestos containing material, either as non-friable or friable asbestos, within 21 calendar days of the material being removed from the site for disposal.

Asbestos-containing materials in structures that are removed or relocated without disturbing asbestos will not be abated. Provide a Certificate of Release to the engineer.

202.05.1.1 Non-Friable Asbestos: When a structure contains non-friable asbestos, carefully remove the asbestos without excessive breakage or crushing before demolition or renovation of the structure. Dispose of the non-friable asbestos material at an approved industrial landfill.

202.05.1.2 Friable Asbestos: When a structure contains friable asbestos, request that DEQ provide a confirmation letter with an Asbestos Disposal Verification Form (ADVF). Complete the ADVF within 90 calendar days from the date of issue. Only contractors or subcontractors certified by DEQ as Asbestos Abatement Entities shall remove friable asbestos from structures. Remove the asbestos before structure demolition or renovation. Perform friable asbestos removal, handling, and disposal in accordance with the latest requirements for asbestos abatement of the DEQ Air Quality Division.

Maintain, and furnish to the engineer within 21 calendar days, Chain of Custody verification records for the friable asbestos from the work site to the disposal site. These records will become part of the permanent project records.

202.05.2 Underground Fuel Tanks: Before removal, underground fuel tanks will be registered with the DEQ by the DOTD Materials and Testing Section as abandoned underground storage tanks. The contractor shall notify the project engineer in writing at least 45 calendar days prior to removal of tanks. Upon receipt of the contractor's notification, the engineer will immediately notify the Materials and Testing Section. All site activities, including the collection of closure samples and tank removal, as defined in the latest DEQ Underground Storage Tank (UST) regulations, shall be performed by a DEQ approved contractor. Submit closure test results, all documentation, and all necessary forms to the Materials and Testing Section to be approved and forwarded to DEQ. The contractor and/or the certified UST subcontractor shall note that all contact and/or coordination with the DEQ is to be the responsibility of the Materials and Testing Section.

Take all necessary precautions to prevent the infiltration of water into tanks and tank excavations during the work.

During routine site closure, the removal, transportation, and disposal of tanks, and the handling of contaminated soil and contaminated fluid, shall be in accordance with all local, state, and federal laws and regulations. Limits of excavation and quantities of contaminated soil and contaminated fluid to be removed, transported, and disposed shall be as specified or as directed.

When underground storage tanks (UST) have been filled with concrete, sand, or other such material and are designated on the plans for removal, the contractor or certified UST subcontractor shall remove, transport and dispose of such tanks in accordance with the recommendations of the American Petroleum Institute (API) and the requirements of the Louisiana Department of Environmental Quality (DEQ) or other regulatory agency of jurisdiction. When such UST are discovered during construction, stop construction activity in the immediate vicinity of the UST and notify the project engineer in accordance with this subsection. The DOTD Materials and Testing Section will verify the closure status of such filled UST discovered during construction prior to any UST site activity by the contractor or certified UST subcontractor. The contractor or certified UST subcontractor shall collect and submit for laboratory analysis+x a representative sample of non-solidified fill material within the storage tank for landfill acceptance. The results of the laboratory analysis shall be used to determine the disposition of the UST fill material. Provide a copy of all laboratory analyses to the Department's Materials and Testing Section for verification prior to profiling materials for landfill acceptance.

202.05.3 Contaminated Soils: Soil in areas of underground fuel tanks or other areas contaminated with petroleum products or other identified

toxic materials at levels above the regulatory limits and is non-protective of groundwater shall be excavated as shown on the plans or as directed. Determination of groundwater protection shall be through the use of the Synthetic Precipitation Leachate Procedure (SPLP) or as directed by the Materials and Testing Section.

Remove the overburden above the contaminated soil to the dimensions shown on the plans or as directed. Also, excavate the contaminated soil at the locations shown on the plans or as directed. Contaminated soil determined to be protective of groundwater, through the use of the SPLP, shall be excavated by the contractor and placed in the roadbed when the soil is determined to be "suitable soil" by the engineer, and when the volume of soil is within quantities specified on the plans. No additional cover of the contaminated soil, other than the specified paved surfaces courses, will be required in the roadbed.

All remaining contaminated soil determined to be protective of groundwater, but not used in the roadbed, shall be placed in other embankment areas within the limits of the project.

Contaminated soil placed in other embankment areas shall be covered with 2 feet of compacted soil by the contractor in accordance with Section 203. Final grade shall be maintained in accordance with the plans. Load the contaminated soil determined not to be protective of groundwater into approved hauling vehicles and dispose of in a site approved by the DEQ. Furnish the engineer, within 21 calendar days, Chain of Custody verification records for the contaminated soil. The Materials and Testing Section will verify that all contaminated soil has been removed.

While the excavation is open, construct and maintain a soil berm around the excavation to prevent surface water runoff from entering the excavation. The removed overburden may be used to construct the berm and backfill the excavation.

Removal and disposal of contaminated soils will be in accordance with all local, state, and federal laws and regulations.

202.05.4 Contaminated Fluids: Remove and dispose of contaminated fluid, in underground fuel tanks, in areas of underground fuel tanks, or other areas as shown on the plans or as directed.

The Department will determine the quantity of contaminated fluid to be removed.

Pump the contaminated fluid into approved hauling vehicles. Remove contaminated fluid from underground fuel tanks before tank removal.

Dispose or recycle of contaminated fluid in a site approved by the Department of Environmental Quality. Furnish the engineer, within

21 calendar days, Chain of Custody verification records for the contaminated fluid.

The Department will verify the removal of the contaminated fluid.

Removal and disposal of contaminated fluids will be in accordance with all local, state, and federal laws and regulations.

202.05.5 Paint Containing Lead or Other Hazardous Materials on Metal Surfaces: Remove steel members of structures protected by paint containing lead or other hazardous materials as shown on the plans or as discovered in the field and prepare for transport in accordance with Section 107.

Prior to removal, transport, treatment, or disposal of any steel members, submit the following to the engineer:

1. Plan of removal or treatment of steel members.
2. Plan for transport of steel members and any hazardous materials.
3. Name and address of the licensed recycling center.

Deliver such steel members to a licensed recycling center capable of processing steel members coated with paint identified as hazardous by the Resource Conservation and Recovery Act (RCRA).

The DOTD or the Owner will be the Generator and obtain the generator number. The contractor will be responsible for obtaining an approved disposal site, arranging for transporting the material and/all testing required. The manifest for transportation will have the DOTD Generator number on it and should be signed by the contractor, DOTD Inspector, and the Disposal Operator with copies to each upon completion.

Unless otherwise directed or shown on the plans, the contractor will be allowed to retain any steel member once the lead paint has been removed and disposed of prior to steel leaving the jobsite in accordance with procedure above at no cost to the Department.

Transport all steel members or hazardous material in accordance with all federal, state, and local laws. Provide Certificates of Disposal, Chain of Custody forms, or other applicable documents within 21 calendar days following each shipment.

202.05.6 Treated Timber: Remove creosoted and other treated timber or lumber shown on the plans or discovered in the field; and prepare for transport by methods approved by the Department. Dispose of all materials that are not designated to be salvaged by the Department or salvaged by the contractor in an appropriate landfill. Provide Certificates of

Disposal, Chain of Custody forms, or other applicable documents within 21 calendar days following each shipment.

202.05.7 Universal Wastes: Universal wastes are hazardous wastes defined in LAC Title 33, Part V, Chapter 38, Section 3813 to include batteries, pesticides, thermostats, lamps and antifreeze. Universal wastes shall be removed in accordance with the plans and shall be stored and prepared for transport as specified in LAC Title 33, Part V, Chapter 38 and herein.

Inform all employees who handle universal wastes of the proper handling and emergency procedures appropriate to the type of waste.

202.05.8 Other Regulated Materials (ORM): Items for removal under this subsection are defined as any material not considered in the above subsections and may be disposed of as a solid waste in the appropriate solid waste landfill. Such materials may include asphalt shingles, noninfectious medical waste, etc. not covered in other items.

202.06 PLUGGING OR RELOCATING EXISTING WATER WELLS. Plug and seal all abandoned water wells at the locations shown on the plans, or as directed by the engineer, in accordance with the W*ater Well Rules, Regulations, and Standards, State of Louisiana.* This document is available at the department of transportation and development, water resources section. Water well abandonment must be accomplished by a DOTD licensed water well contractor. Relocated water wells shall conform to the Sanitary Code of the State of Louisiana as prepared and promulgated by the Louisiana State Board of Health.

202.07 MEASUREMENT. Removing structures and obstructions will be measured on a lump sum basis or by the unit as stipulated in the contract and shall include appurtenances, foundations, etc.

Hauling salvaged materials to storage sites will not be measured for payment.

When an item is included for removal of bridges, the removal of the approach slabs, superstructure, and substructure will be considered part of the work unless otherwise specified or shown on the plans.

Removing or relocating structures will be measured by the unit stipulated in the contract. Each principal structure with its associated appurtenances, whether integral or not integral to the structure being removed or relocated, will be considered as a separate unit including its associated appurtenances.

Plugging of existing abandoned water wells or relocating water wells will be measured per each well plugged and accepted or relocated.

Measurement for removal of contaminated soil and non-contaminated overburden will be by the cubic yard using the in-place quantities as determined by cross-sections.

Measurement for contaminated fluid will be by the gallon.

Removal, transportation, and related fees for disposal of steel members of structures protected by paint containing lead or other hazardous materials, or creosoted timbers or lumber, will be considered part of the work when shown on the plans and will not be measured for payment.

When a structure to be removed or relocated is shown on the plans to contain universal wastes, the removal, storage and transport of the universal waste to an approved disposal site or destination facility will not be measured for payment but will be included in the structure to be removed or relocated.

Measurement for removal of Other Regulated Materials (ORM) will be as designated on the plans.

202.08 PAYMENT. Payment for removal of structures or specific obstruction items stipulated for removal and disposal under unit price or lump sum pay items will be made at the contract price per unit or lump sum as specified. This will include demolishing, removing and disposing of such items as well as the excavation and backfill incidental to their removal when required. When the removal is in an area to be excavated and payment for excavation is made under other items, no deduction will be made from the excavation quantities. The price shall also include salvage of materials, their custody, preservation, storage on the right-of-way or as designated on the plans, and disposal.

Payment for the removal of bridges will include removal of the approach slabs, superstructure, and substructure.

Payment for the relocation of structures will be made at the contract unit price which will include all costs for moving, reassembly, restoration, reconstruction, or equivalent replacement of the structures.

Payment for plugging and sealing existing abandoned water wells or relocating existing water wells will be made at the contract unit price which will include all labor, material, tools, equipment, and incidentals necessary to complete the work.

If a structure is to be removed or relocated as a unit under Pay Items 202-01, 202-02, or 202-03 and;

1. The contractor enters into an agreement with a property owner for disposition of the structure other than as shown on the plans; or if it is subsequently determined that said structure can remain in place, in whole or in part, with or without minor adjustments, and;

2. The contractor enters into an agreement with the property owner incorporating such revised determination and any accompanying adjustments regarding said structure, including any damages for leaving the structure in place, then;

3. The contractor shall furnish such agreement to the engineer for approval. If approval is given by the engineer, the contractor shall furnish the Department with a Certificate of Release from the property owner for the unit.

In case of multiple ownership interest in the structure and/or property, a Certificate of Release from each owner shall be furnished. This certificate shall state that said owner waives all claims for damages to the property and structure to be removed, relocated, left in place, or otherwise handled to the owner's satisfaction.

Except as provided hereinafter, the contractor will be paid for removing, relocating, or other handling of the structure at the contract unit price as listed under Pay Items 202-01, 202-02, or 202-03. However, a deduction will be made in such amount if:

1. A determination to allow the structure to remain in place results in a decrease in cost to the contractor;

2. An allowance is made to the owner for damages to the property or structure caused by the contractor, or its subcontractor, agent, or assign; or

3. Any other adjustment of the contract amount for removal, relocation, or other handling of said unit under Pay Items 202-01, 202-02, or 202-03, is deemed justified.

When a structure has been identified on the plans as containing friable or non-friable asbestos, the price for asbestos removal and disposal will be included in the bid price for removal, relocation, or demolition of the structure. When a structure is found to contain friable or non-friable asbestos and it has not been identified on the plans as containing asbestos, payment for the removal and disposal of the asbestos will be made in accordance with 109.04, including the cost of all testing.

Payment for removal, transportation, and disposal of contaminated soils and fluids will be in accordance with rates specified in applicable appendices (currently Appendices A and B) of the *Louisiana Motor Fuels Underground*

Storage Tank Trust Fund Cost Control guidance document as maintained and updated by the Louisiana Department of Environmental Quality (DEQ). The DEQ cost control guidance document can be obtained at DEQ website. All payments under this item will be in accordance with industry standards, which include all equipment, labor, and materials necessary to complete the work, including backfilling any excavation. Payment for work not covered in the cost control guidance document, or any disputed payments, will be negotiated and resolved prior to performance of work. The Department will reimburse the contractor monthly for the actual incurred cost for such services. The contractor shall furnish documentation with the request for reimbursement.

Payment for removing steel members of a structure identified on the plans as being protected by paint containing lead or other hazardous materials, or creosoted timbers or lumber, and transporting them to the recycling center or landfill, will be included in the bid price for removal or relocation of the structure. When a structure is determined to have steel members protected by paint containing lead or other hazardous materials, or creosoted timber or lumber, and it has not been identified on the plans as such, payment for removal and transport of the members to a licensed recycling center or landfill will be made in accordance with 109.04. Unless otherwise directed or shown on the plans, the contractor will be allowed to retain any steel member once the lead paint has been removed and disposed of prior to steel leaving the jobsite and a Chain of Custody form or other applicable documentation is submitted to the engineer within 21 calendar days.

When the plans show that a structure to be removed or relocated contains a universal waste, payment for the removal of the universal waste will be included in the contract unit price for the removal or relocation of the structure, which will also include all equipment, labor, and materials required for the removal, storage, and transport of the universal waste in accordance with LAC Title 33, Part V, Chapter 38. When a structure to be removed or relocated is found to contain a universal waste and it is not identified as such on the plans, payment for the removal, storage, and transport of such universal waste in accordance with LAC Title 33, Part V, Chapter 38 will be made in accordance with 109.04.

Payment for removal of other regulated materials (ORM) will be as designated on the plans.

Payment will be made under:

Item No.	Pay Item	Pay Unit
202-01	Removal of Structures and Obstructions	Lump Sum
202-02	Removal of _____	As Required
202-03	Relocation of _____	As Required
202-04	Excavation, Disposal and Backfilling of Non-Contaminated Overburden	Cubic Yard
202-05	Excavation, Disposal and Backfilling of Contaminated Soil	Cubic Yard
202-06	Removal and Disposal of Contaminated Fluid	Gallon
202-07	Plugging Existing Water Wells	Each

Section 203
Excavation and Embankment

203.01 DESCRIPTION. This work consists of excavation, disposal, placement, and compaction of materials for which provisions have not been made under other sections of these specifications. This work shall include excavation and embankment construction for roadways and other structures, excavation for ditches and channels, and other grading operations necessary for the work in accordance with these specifications and in conformity with the lines, grades, thicknesses, and typical sections shown on the plans or established. When specified, supply, install, and monitor settlement plates. When contaminated soils or underground tanks are encountered, handling shall be in accordance with Section 202. Disposal of material shall be in accordance with 202.02.

The plans may include data regarding the boring and classification of existing materials. The Department does not guarantee that individual samples are representative of the entire project, and bidders are required to study, make interpretations and additional investigations, as necessary, at no direct pay. The bidder shall determine the suitability of the on-site soils to meet specifications of Section 203.

The contractor shall comply with 107.09 for work in, over or adjacent to navigable waters and wetlands, and shall comply with 107.27 when cultural artifacts, historical sites, or archaeological sites are encountered.

Quality assurance requirements shall be as specified in the latest edition of the Department's publication titled *Application of Quality Assurance Specifications for Embankment and Base Course.*

Excavated material may be used in accordance with 203.06.

Temporary erosion control shall be in accordance with Section 204.

203.02 GENERAL EXCAVATION. General excavation consists of the excavation of materials, as required by the plans, except drainage excavation and structural excavation. General excavation also includes unsuitable material in accordance with 203.04.

203.03 HYDRAULIC EXCAVATION.

203.03.1 Drainage Excavation: Drainage excavation includes the excavation for drainage beyond the limits of the roadway section. Drainage excavation also includes inlet and outlet ditches to structures or roadways; changes in or deepening of channels of streams, berm ditches, ditches

parallel or adjacent to the roadway beyond the limits of the roadway section; and material excavated from areas under bridges.

203.03.2 Cleaning Existing Ditches: This item consists of excavating and disposing of sediment and vegetative materials from existing ditches in order to reestablish flow lines on the existing alignment in accordance with plan details and the following. Establishment of ditch grades, if necessary for this item, will be the responsibility of the project engineer.

Unless otherwise directed, dispose of material excavated from existing ditches in accordance with 202.02.

203.04 UNSUITABLE MATERIAL. Unsuitable materials are soils containing significant amounts of debris or organic matter including stumps, roots, logs, and humus, or other materials which will decay or produce subsidence, including highly saturated soils, which the engineer determines are not satisfactory for use in the embankment or other construction purposes. Remove unsuitable materials and dispose of as general excavation. Remove unsuitable materials determined to be environmentally sensitive and dispose of in accordance with 202.05.

203.05 BORROW. Borrow is defined as soils required for construction of embankments or other portions of the work in excess of soils obtained from excavation. Obtain borrow from an approved source and use in accordance with 203.06. Make arrangements for obtaining borrow at no direct pay.

Securing of an exclusive option by a bidder or contractor on borrow areas or materials for the work will be considered a violation of Louisiana law and will be a basis for rejection of bids or such other action the Department deems advisable.

Notify the engineer in writing a minimum of 30 calendar days in advance of contractors borrow operations so that samples may be taken and soil tests completed prior to beginning borrow operations. Include in notification: boring requests, quality control test results, property owner agreements, and other information as required by the Materials Sampling Manual and the *Application of Quality Assurance Specifications for Embankment and Base Course* to the District Lab.

Unless otherwise authorized in writing, locate borrow pits, gravel pits, and quarry sites at least 300 feet from the right-of-way.

When sources of borrow are located adjacent to a stream or river listed on the National System of Wild and Scenic Rivers or the Louisiana Natural

and Scenic Rivers System, locate borrow pits and any stockpiled materials at least 300 feet from the natural stream or river bank.

Clear the borrow pit and access to allow access for DOTD boring equipment. Survey the borrow area with a base line staked. Furnish both the engineer and laboratory with a location plat and borrow pit plat. Do not begin borrow operations until materials are approved for use.

Sampling of soils from open excavations in lieu of borings will be allowed provided the open excavations display and allow sampling of each soil strata and the excavation is at no cost to the Department.

203.06 SOIL USAGE. The laboratory will test and classify soil in accordance with DOTD TR 423 from samples taken in the original location or from designated stockpiles. Soil shall be classified and approved prior to its being placed in embankments or other final positions on the project. Blending in the pit by approved methods to adjust percent silt or sand will be permitted. Do not blend soils that do not meet Liquid Limit or PI requirements in order to modify the Liquid Limit or PI. Soils may be treated with lime to reduce PI in accordance with 203.06.5.

Soil properties will be determined by the test methods shown in Table 203-1, "Soil Properties."

Table 203-1
Soil Properties

Property	Test Method
Plasticity Index (PI)	DOTD TR 428
Liquid Limit (LL)	DOTD TR 428
% Organic	DOTD TR 413
% Silt	DOTD TR 407
pH	DOTD TR 430

203.06.1 Usable Soils: Usable soils shall have a maximum PI of 25 and a maximum organic content of 5 percent. Soils with a silt content of 50 percent or greater and also a PI of 10 or less will not be allowed.

203.06.2 Nonplastic Embankment: Nonplastic embankment shall be as specified in 203.09.

203.06.3 Headers: Headers are that portion of the embankment within 500 feet of a bridge end. Construct headers for their full height with usable soils meeting the requirements of 203.06.1, and having a minimum PI of 11, a maximum PI of 25, and a maximum silt content of 65 percent.

No lime treatment to the soil to meet the PI requirements will be permitted. Compact headers to 98 percent of maximum dry density in accordance with 203.07.

203.06.4 Embankments other than Headers: Construct embankments with usable soils meeting the requirements of 203.06.1. Soil with a PI greater than 25 and less than 35 will be permitted when treated with a minimum of 6 percent lime, by volume, provided the organic content and silt requirements given in 203.06.1 are met. If lime treatment is used, it will be at no direct pay. Lime treatment shall be Type E Treatment conforming to Section 304.

The contractor may request in writing that usable soils for temporary detour roads have a PI not to exceed 45 and a maximum silt content of 75 percent provided:

1. This material will be removed and not become part of the permanent embankment, and
2. The contractor agrees to take responsibility for any additional maintenance required.

203.06.5 Plastic Soil for Slopes

203.06.5.1 Use Topsoil in Accordance with Section 715 Embankment Material: The outside layer of embankment (fill sections) will consist of a plastic soil blanket in accordance with 203.10.

203.06.5.2 Cut Slopes, PI Less than 10: When soils having a PI less than 10 exist on cut slopes, undercut 12 inches and place a plastic soil blanket conforming to 203.10.

203.06.5.3 Cut Slopes, PI 10 or Greater: When soils having a PI of 10 or greater but with a pH less than 5.5 or greater than 8.5 exist on cut slopes, undercut and place a plastic soil blanket complying with 203.10. In lieu of furnishing a plastic soil blanket, the soil may be modified in place so that the pH of the soil complies with the requirements of 203.10, at the option of the engineer and concurrence of the contractor. In such case, payment will be in accordance with existing items or 109.04, as applicable, not to exceed the cost of undercut and replacement.

203.06.6 Usable Soils for Slope Adjustments and Shoulder Widening: When the thickness of embankment material used for slope adjustment or unpaved shoulder is less than 12 inches, a plastic soil complying with 203.10 will be required. If the thickness is greater than 12 inches, the contractor will be allowed to substitute plastic soil for usable soil, provided the widening is not directly below a paved shoulder.

203.07 GENERAL REQUIREMENTS

203.07.1 General: Excavation and embankment work consists of constructing roadway embankments, including preparation of surfaces on which they are to be placed; constructing drainage excavation; constructing backslopes; constructing dikes, when required; placing and compacting approved material in areas where unusable material has been undercut and removed; placing and compacting embankment material in holes, pits, and other depressions.

Do not place or spread embankment materials on portland cement concrete or asphalt concrete pavements. Do not damage pavement surfaces, edges and joints during embankment operations.

203.07.2 Surface Layer Preparation: Complete all necessary clearing and grubbing in an area, prior to beginning excavation, grading, or embankment operations in that area. Prior to any embankment operations in an area, cut ditches as required to facilitate drainage in that area unless otherwise noted on the plans.

When preparing surface layers on which the embankment or base is to be placed, attempt all normal earthwork construction methods before undercutting or modifying the soil with additives. Such construction methods may include, but are not limited to, the following and will be at no direct pay:

1. Draining and drying of the surface until the material is within the limits of optimum moisture before compaction is attempted.
2. Using lighter weight construction equipment for manipulating, disking, drying, and compacting the material.
3. Placing successive loads of approved material in a uniformly distributed layer of a thickness necessary to support equipment while placing subsequent layers.
4. Rerouting heavy construction equipment around the area until the embankment can support the equipment without damage to foundation soils.

Remove unstable materials by undercutting, unless otherwise directed, and backfill to required section with usable soils as directed.

When undercutting is required, conduct the operations in such manner that the engineer can make necessary measurements before backfill is placed.

When a new roadway is to be constructed on an existing roadbed, remove existing surface courses. When the surface of the existing roadbed is within 2 foot of finished sub-grade, scarify the existing roadbed full width to a depth of not less than 9 inches and re-compact to at least 95.0 percent of maximum dry density.

203.07.3 Excavation: Excavated material shall become the property of the contractor. Soils from excavation areas may be used in embankments or other finished sections when approved. Dispose of surplus or unusable excavated material in accordance with 202.02 or as provided in this subsection.

When obliteration of old roadways is required, include grading operations necessary to satisfactorily incorporate the old roadway into the new roadway and surroundings to the satisfaction of the engineer and to allow drainage.

203.07.4 Settlement Plate Installation and Monitoring: Furnish and install settlement plate as shown on the plans.

Install settlement plate prior to placement of any fill. Place settlement plate on top of the geotextile fabric if shown on the plans, otherwise, place the settlement plate on natural ground. Maintain a vertical and undamaged riser pipe during embankment placement and compaction. Replace any settlement plate damaged during construction at no cost to the Department.

Establish the elevation of the settlement plate. Take initial settlement plate elevation readings immediately after installation. Unless specified on the plans, monitor settlement plate as follows: immediately after the final lift placement, twice weekly for the first month, and weekly for five months thereafter. Repeat this sequence if any additional fill placement or surcharge is required. Record the embankment elevation and surcharge height for each settlement plate reading. Submit settlement plate readings to the Project Engineer. The Project Engineer will verify the initial and final elevations for acceptance.

Remove riser pipe and casing three feet below base course upon acceptance.

203.07.5 Embankment: Embankment material shall be in accordance with 203.06. Place in uniform layers not exceeding 12 inches of un-compacted thickness. Place each layer for the full width of embankment, blend as necessary to obtain a uniform material, bring to a uniform moisture content, and compact to a minimum of 95.0 percent of maximum dry density before the next layer is placed. Determine maximum dry density in accordance with DOTD TR 415 or TR 418 and percent in-place density in accordance with DOTD TR 401. The density of the embankment shall be such that the density of the type of base course being constructed shall be met. The moisture content at the time of compaction, tested in accordance with DOTD TR 403, shall be within a range of ±2.0 percent of optimum moisture established in accordance with DOTD TR 415 or TR 418. If not, reprocess and re-compact the lifts until these requirements are met.

Topsoil shall be placed and compacted in accordance with 715.03.

Ensure that final embankment slope lines are uniform in appearance. Measure as necessary to assure that the elevations at the top, bottom, and intermediate breaks in the slope are such that minimum acceptable slopes are achieved. Visually inspect the slopes and ensure the slopes are straight without valleys or humps. If an apparent discrepancy is discovered upon visual inspection, take measurements a minimum of every 10 feet measured along the slope between theoretical break points in the embankment. Allowable tolerances for slope grade will not be less than by 0.03 foot/foot nor greater than 0.15 foot/foot. The slopes shall be reworked until these criteria are met. The top of embankment shall not vary from the established grade by more than ±0.1 foot.

Conduct operations to prevent lamination between lifts. Correct all laminations between lifts prior to placing additional lifts. Assure that surfaces of excavated areas and embankments are smooth and uniform. Do not disturb material outside the construction limits.

When excavation and embankment construction results in surface soils having a PI less than 10, or pH less than 5.5 or greater than 8.5, place a plastic soil blanket complying with 203.10.

The contractor shall be responsible for the stability of embankments until final acceptance. Construction activities which may lead to subsequent embankment damage, will not be permitted.

When embankments are constructed on a surface sloping more than 6:1 from the horizontal, cut the slope of the ground on which the embankment is to be placed into steps, as directed, before fill is placed.

When an embankment is to be constructed to a height of less than 5 feet, remove heavy sod and objectionable vegetation from the area on which the embankment is to be placed. Scarify the area to a depth of approximately 9 inches. Re-compact this area to at least 95.0 percent of maximum dry density in accordance with DOTD TR 415 or TR 418 and percent in-place density in accordance with DOTD TR 401. When height of fill is 5 feet or more, removal of sod will not be required, but disk the area on which embankment is to be placed to the satisfaction of the engineer and re-compact before construction of embankment.

When embankment material is to be deposited only on one side of abutments, wing walls, piers, or culvert head walls, do not compact the area immediately adjacent to the structure to the extent that it will cause excessive pressure against the structure. When the embankment is to be deposited on both sides of a concrete wall or similar structure, conduct operations so that the embankment is always at approximately the same elevation on both sides of the structure. Backfill structures in accordance with Section 802.

When embankments are constructed in lakes, streams, swamps, or other unstable areas and unstable material cannot be removed or the area drained, the requirement for placing material in layers as outlined above may be waived. When this requirement is waived, place the embankment by end dump or other approved methods to an elevation where normal construction methods can begin. Construct embankments placed above this elevation in layers as specified above. When a wave of unsuitable material is forced up in front of the end dumping operation, it shall become the property of the contractor and be removed as necessary. In addition, do not allow this material to be trapped and incorporated in the embankment except as part of plastic soil for slopes.

203.08 CUT AREA PREPARATION. Scarify and compact the top 12 inches of the cut area to such density that the compaction requirements of the type base course being constructed shall be met. Construction, compaction, and testing requirements shall comply with 203.07.

When unstable soils are encountered, the engineer will determine the limits to be undercut. Excavate to a stable foundation or to the depth required by the engineer and backfill to existing grade. Undercut shall be constructed and tested in accordance with 203.07. When a stable foundation cannot be reached, "bridge-in" the embankment materials and construct the remaining embankment to existing grade in accordance with 203.07.

203.09 NONPLASTIC EMBANKMENT

203.09.1 Materials: Non-plastic embankment material shall comply with 1003.09 or the following, unless otherwise specified on the plans.

203.09.2 General Requirements: Do not entrap unsuitable material defined in 203.04 in the embankment. Remove any such material at no direct pay.

Leave surcharge materials on the embankment for at least the specified number of days after approval of the increment. Damage to embankment increments due to the contractor's operations shall be satisfactorily repaired by the contractor at no direct pay. Remove excess surcharge materials after the surcharge period. Verification cross-sections of the final embankment will be taken after removal of the surcharge. Material required due to additional subsidence after cross-sections are taken will be paid under the appropriate item.

After all embankment increments have been surcharged, satisfactorily dispose of excess surcharge material in accordance with 202.02 at no direct pay.

Except for stone embankments, furnish and place a plastic soil blanket complying with 203.10.

203.09.3 Nonplastic Embankment Construction: Construct nonplastic embankments by mechanical methods.

Unless otherwise shown on the plans, place material in lifts not exceeding 15 inches of uncompacted thickness after establishing a working table as directed. Compact each lift and test in accordance with 203.07.

203.09.4 Blended Calcium Sulfate Embankment Construction: Add water or use other suitable means to prevent dust resulting from the transport and placement of dry material. Place blended embankment material in lifts not exceeding 12 inches in thickness (loose) after establishing a working table as directed. Compact each lift to at least 95 percent of maximum dry density prior to placement of subsequent lifts. Determine the maximum density in accordance with DOTD TR 418 modified to include a drying temperature not to exceed 140°F. Perform field density testing in accordance with 203.07. Determine moisture content for density corrections by oven drying the material at 140°F for a minimum of 24 hours. Provide a forced draft type oven capable of maintaining this temperature. Also, furnish and place a plastic soil blanket complying with 203.10.

Do not place blended calcium sulfate within 10 feet of metal drainage structures. The contractor will be allowed to substitute natural stone, flowable fill under Section 710, or other material in 1003.08 as approved by the Department.

203.10 PLASTIC SOIL BLANKET. Plastic soil blanket shall consist of soils having a minimum PI of 11, maximum PI of 35, a maximum silt content of 65 percent, and a pH not less than 5.5 or greater than 8.5, and a minimum organic content of 3 percent. The contractor will be allowed to blend organic materials to achieve the minimum 3 percent organic content. The plastic soil blanket shall support a satisfactory stand of grass in accordance with Sections 714 or 717. Construct the soil blanket to a minimum thickness of 12 inches. Areas requiring a plastic soil blanket shall be approved prior to placement of the plastic soil blanket. After materials are placed and spread, remove lumps, stones, roots and other foreign matter from the area. Spread and roll soil blanket material in a manner that leaves a uniform surface. Ensure that any remaining ridges or grooves, including cleat tracks from the dozer, will be parallel to the roadway during the period of time between placement and seeding.

Place plastic soil blanket in a timely manner to prevent erosion.

203.11 GEOTEXTILE FABRICS

203.11.1 General: Furnish and place geotextile fabric in accordance with these specifications and in conformance with the details shown on the plans.

203.11.2 Materials: The geotextile fabric shall comply with Section 1019.

203.11.3 Construction Requirements: Keep rolls of geotextile fabric covered and protected from ultraviolet degradation at all times until use. Cover geotextile fabric that has been installed with embankment material within seven calendar days. When ultraviolet damage occurs, remove and replace the geotextile fabric. Place the geotextile fabric at the locations shown on the plans or as directed. Overlap or sew adjacent rolls of geotextile fabric. When rolls are overlapped, overlap a minimum of 18 inches or as specified in the plans, including the ends of the rolls. Place the top layer of the geotextile fabric parallel with adjacent rolls and in the direction of embankment placement. When rolls are sewn, join adjacent rolls by sewing with polyester or kevlar thread. When field sewing, employ the J-seam or "Butterfly" seam with the two pieces of geotextile fabric mated together, turned inwards so as to sew through four layers of fabric. Sew with two rows of Type 401, two-thread chain stitch. Factory seams other than specified shall be submitted to the Materials and Testing Section for approval. Where the ground is covered with water or soil is saturated, sewing of the geotextile fabric will be required.

Place the geotextile fabric as smooth as possible with no wrinkles or folds, except in curved road sections. For curved road sections, fold the geotextile fabric to accommodate the curve. The fold shall be in the direction of construction and pinned or stapled. Fill and compact ruts that occur during construction prior to placement of geotextile fabric.

Remove damaged geotextile fabric and replace with new geotextile fabric or cover with a second layer of geotextile fabric extending 2 feet in each direction from the damaged area.

203.12 QUALITY CONTROL. Locate, select, and place material conforming to specification requirements. Control processes, including performing tests and making adjustments as necessary, to result in a uniform quality product meeting all the requirements of the plans and specifications. Perform tests for in-place moisture content in accordance with DOTD TR 403, at a frequency that will ensure that the material is within the tolerances of optimum moisture. Perform tests for in-place density in

accordance with DOTD TR 401 at a frequency that will ensure that the compactive effort is producing a uniform product that conforms to specification requirements. Control placement and finishing to ensure conformance with the lines, grades, thickness, and typical cross-sections shown on the plans or established.

Sections will be inspected prior to acceptance testing. Correct obviously deficient areas prior to acceptance testing.

203.13 ACCEPTANCE. The Department will perform inspection, sampling, and testing for acceptance. Correct any area that is deficient whether identified by inspection or testing.

The embankment (with surcharge, if required) will be approved in increments of 1000 feet, except terminal increments which may be less than 1000 feet.

Maximum density for earthwork will be determined in accordance with DOTD TR 415 or DOTD TR 418; in-place density will be determined in accordance with DOTD TR 401.

203.14 MEASUREMENT

203.14.1 General: Unless otherwise specified, borrow material in accordance with 203.05, topsoil, and plastic soil for slopes in accordance with 203.06.6 will be considered incidental to the embankment and will not be measured separately, but will be measured as embankment. Removal and stockpiling of existing topsoil will be measured by the in-situ square yard.

Measurement of undercut will be from subgrade or original ground, whichever is lower.

No measurement will be made for excavation for culverts or culvert headwalls.

When the grade line of a pipe or box culvert is raised or lowered more than 2 feet from the grade line shown on the plans or is relocated to a site requiring an equivalent change in excavation, payment will be increased or decreased accordingly at the rate of three times the contract unit price for General Excavation (or Embankment if General Excavation is not a contract pay item). The volume to be used in the increase or decrease will be a rectangular solid the length of the pipe or box culvert, the outside width of the pipe or box culvert plus 3 feet, and the average change in invert elevation minus 2 feet.

203.14.2 General Excavation, Embankment and Nonplastic Embankment: The measurement of quantities will be computed by the average end area method and will be that area bound by (1) the original

ground line established by location (plan) cross-sections or new original cross-sections obtained by the contractor, and (2) the final theoretical pay line as shown on the plans, or established by the engineer, adjusted for field changes. New original cross-sections will be taken after clearing, and prior to grubbing.

The final theoretical pay line shall be derived from the profile grade, typical section and ditch grades shown in the plans, along with approved plan changes and other field changes made by the engineer. No increase in quantities will be authorized for overbuilding unless directed by the engineer.

Pay lines for surcharged embankments will be the theoretical surcharge lines shown on the plans. No measurement will be made for removing and disposing of excess surcharge materials.

When payment is made for embankment in its final position, no additional quantity will be measured due to settlement, compaction, erosion or other cause.

Excavation and embankment for crossovers, turnouts, driveway approaches or other minor installations will not be included in the measurement.

A depth and width tolerance of ±1.5 feet will be allowed for excavation of unsuitable material. Overdepth and overwidth will be waived at no direct pay; however, no measurement for payment will be made for additional embankment material required to backfill areas beyond theoretical unsuitable material lines.

Measurement will be made by one or more of the following methods:

203.14.2.1 Plan Quantity: The quantities of excavation and embankment will be those shown in the plans, provided the project is constructed essentially to the theoretical pay line.

When the plans have been revised or when disagreement exists between the contractor and the engineer as to the accuracy of the plan quantities for the entire project, or any substantial portion thereof, either party may require that quantities be revised. The party requesting the revision will be responsible for isolating and detailing the error in an easily understood format which may include cross-sections, sketches, and computations. The revision will be verified and agreed to by the other party. Quantity revisions will not be considered without advanced notice to both parties and unless the original cross-sections have been taken.

No payment will be made to the contractor to re-compute new plan quantities.

203.14.2.2 Field Cross-Sections: When payment lines are not shown on the plans and cannot be established, in lieu of final theoretical pay lines, field cross-sections will be used to determine pay quantities for excavation and embankment.

After clearing operations, the contractor shall take original cross-sections for the entire length of the project. Take all original cross-sections in the presence of the Department. Take cross-sections at sufficient intervals to accurately determine earthwork quantities, not to exceed 100 linear feet. Take the cross-sections in accordance with DOTD procedures, and furnish results to the Department immediately in a format satisfactory to the engineer. The Department reserves the right to take additional cross-sections as needed to verify the contractor's cross-sections. In the event the cross-sections do not verify, the contractor shall investigate and reconcile any differences.

The original cross-sections will be used to determine the accuracy of the location cross-sections by using random sections not farther apart than 1000 linear feet and centerline elevations at intervals of 100 linear feet. The location cross-sections will be considered to be usable if the average of the differentials does not exceed ±0.3 foot. For significant portions of the project with obvious errors between location and original cross-sections, the contractor's original field cross-sections will be used, and will not be part of the verification process. In all cases where location sections are unavailable, new originals are to be taken and used.

203.14.3 Hydraulic Excavation: After completion of drainage excavation operations at each individual location, measurement will be made in accordance with 203.14.2.1 or 203.14.2.2. Elevations for underwater excavation will be determined in accordance with DOTD TR 426.

Cleaning existing ditches will be measured by the linear foot along the center line of each ditch.

203.14.4 Settlement Plate Installation and Monitoring: Settlement plate installation and monitoring will be measured per each, which includes furnishing, installing, monitoring and removing; and includes all labor, materials, equipment, tools, and incidentals necessary to complete the work.

203.14.5 Excavation and Embankment

203.14.5.1 Linear Measurement: When excavation or embankment is to be measured on a linear basis, measure the length along the centerline or the baseline used in the plans and include performing the excavation, embankment and grading work necessary for construction of the

project. It is the contractor's responsibility to determine quantities of earthwork necessary to complete this item.

203.14.5.2 Lump Sum Measurement: When excavation and embankment is to be measured by the lump sum, this item includes performing the excavation, embankment, and grading work necessary for construction of the project. It is the contractor's responsibility to determine the correct quantities of earthwork required to complete this item. No adjustment in contract price will be made.

203.14.6 Borrow (Vehicular Measurement): The material will be measured by the cubic yard in approved hauling vehicles at the point of delivery in accordance with 109.01.

203.14.7 Geotextile Fabric: Geotextile fabric will be measured by the square yard of covered area in place.

203.15 PAYMENT. Payment for the accepted quantities will be made at the contract unit prices, which includes furnishing the equipment, labor and materials necessary to complete the items.

Payment for roadway obliteration will be made under appropriate roadway removal and excavation items. Removal of existing asphalt pavement asphalt will be paid for under Section 202. Blading and shaping to drain will be considered incidental and will not be measured for pay. Excavation, other than blading and shaping, generally over 1 foot in depth over a substantial area, will be paid as general excavation for the full depth of cut.

Payment for undercut will be as general excavation, and payment for required backfill will be made as embankment.

Plastic soil blanket and topsoil will be included in the pay volume for the embankment. Payment for the removal and stockpiling of existing topsoil will be by the in-situ square yard.

No direct payment will be made for acquisition of borrow materials outside the right-of-way; acquisition of right-of-way and constructing haul roads; stockpiling and re-handling of materials; precautionary measures to protect private property and utilities; or furnishing necessary water and watering equipment.

Excavation for plastic soil blanket in cut sections, when required, will be made as general excavation and payment for the required plastic soil blanket will be made as embankment.

Payment for cleaning existing ditches will be made at the contract unit price per linear foot, which includes removal of obstructions, furnishing and placing required backfill material, and disposing of removed material.

Payment for settlement plate installation and monitoring will be made at the contract unit price per each. If additional surcharge material is required it will be paid for as embankment. Compensation for extension of the monitoring period may be allowed in accordance with 109.04.

Payment will be made under:

Item No.	Pay Item	Pay Unit
203-01	General Excavation	Cubic Yard
203-02	Drainage Excavation	Cubic Yard
203-03	Embankment	Cubic Yard
203-04	Nonplastic Embankment	Cubic Yard
203-05	Excavation and Embankment	Lump Sum
203-06	Excavation and Embankment	Linear Foot
203-07	Borrow (Vehicular Measurement)	Cubic Yard
203-08	Geotextile Fabric	Square Yard
203-09	Removal and Stockpiling of Existing Topsoil	Square Yard
203-10	Cleaning Existing Ditches	Linear Foot
203-11	Settlement Plate Installation and Monitoring	Each

Section 204
Temporary Erosion Control

204.01 DESCRIPTION. This work consists of constructing and maintaining temporary erosion control features shown on the plans or as directed. Coordinate installation of temporary erosion control features with construction of permanent erosion control features to the extent necessary to ensure economical, effective and continuous control of erosion and water pollution throughout the life of the contract.

Develop and comply with a Storm Water Pollution Prevention Plan (SWPPP) approved by the Department in accordance with the Department's Notice of Intent (NOI), and retain it at the site of the project for review during inspections. The SWPPP shall include the erosion control features as shown on the plans, or as directed, in addition to other required components of the SWPPP specified by the U. S. Environmental Protection Agency (EPA) and the Louisiana Department of Environmental Quality (LDEQ). The plan shall indicate the use of contract items and the coordination of this work with the scheduling of clearing and earthwork.

Quality assurance requirements shall be as specified in the latest edition of the Department's publication titled *Application of Quality Assurance Specifications for Embankment and Base Course.*

204.02 CONTROL OF ERODIBLE SOIL.

204.02.1 General: Prevent the transmission of soil particles into streams, canals, lakes, reservoirs, or other waterways.

Except as necessary for construction, do not deposit excavated material into streams or impoundments or in a position close enough to be washed into waterways by high water or runoff.

Do not disturb lands or waters outside the limits of construction, except as authorized.

204.02.2 Adjacent to Waterways: Keep stream banks in their natural state. Do not unnecessarily strip protective vegetation in the vicinity of stream banks. Conduct operations without damage to banks. Do not excavate banks except as shown on the plans or as otherwise approved in writing. Work roads requiring bank cuts shall be approved by the project engineer prior to making such cuts. Restore the banks to the satisfaction of the project engineer.

204.02.3 Adjacent to Property: The location of, and method of operation in, borrow pits, material pits, and disposal areas obtained by the

contractor for waste material from the project (other than commercially operated sources) shall be the contractor's responsibility.

204.03 MATERIALS. Materials not covered by project specifications shall meet commercial grade standards and shall be approved before being incorporated into the project. Acceptance of temporary erosion control materials will be in accordance with the materials sampling manual.

204.03.1 Mulches: Mulch shall comply with 1004.04.

204.03.2 Seed: Seed shall comply with 1004.03. Grass shall be an approved quick-growing species suitable to the area, providing a temporary cover which will not compete with permanent grasses.

204.03.3 Slope Drains: Slope drains may be constructed of pipe, fiber mats, rubble, portland cement concrete, asphalt concrete, plastic sheets, or other acceptable material.

204.03.4 Fertilizer: Fertilizer shall comply with 1004.01.

204.03.5 Silt Retention Systems:

204.03.5.1 Silt Fences: Silt fencing shall be wire-supported or self-supported systems. Other silt fencing systems may be used when approved. Silt fencing shall comply with 1018.15. Geotextile fabric shall comply with Section 1019.

204.03.5.2 Other Retention Systems: Other silt retention systems may be used if approved by the Materials Engineer Administrator.

204.03.6 Lime: Agricultural lime shall comply with 1004.02.

204.03.7 Temporary Construction Entrance: Temporary construction entrances shall consist of stone or recycled portland cement concrete complying with gradation as required in 711.02, 2 pound class placed on geotextile fabric complying with Section 1019, Class D.

204.03.8 Hay Bales: Hay or straw bales shall be rectangular bales, acceptable to the project engineer. The average length of bales shall be 34 inches minimum.

204.04 EXPOSURE OF ERODIBLE EARTH. The engineer may direct the contractor to provide immediate permanent or temporary erosion or pollution control measures to prevent contamination of streams, lakes, tidal waters, reservoirs, canals or other impoundments or prevent detrimental effects on property outside the right-of-way and damage to the project. Limitations of areas in which excavation and embankment operations are underway shall be commensurate with the contractor's capability and progress in keeping finish grading, temporary erosion control, and

permanent erosion control measures in accordance with the accepted schedule.

204.05 INCORPORATION OF EROSION CONTROL FEATURES. Incorporate permanent erosion control features into the project at the earliest practical time. Use of temporary erosion control features will be authorized to correct unforeseen conditions that develop during construction; to control erosion prior to the time it is practical to construct permanent control features; or to provide immediate temporary control of erosion that develops during normal construction operations but is not associated with permanent erosion control features.

Use temporary erosion control features as directed in areas where stage construction or other conditions not under control of the contractor preclude completion of a section of roadway in a continuous manner, or where subsequent construction operations will cause damage to permanent erosion control features.

204.06 CONSTRUCTION REQUIREMENTS. Temporary erosion control features consist of, but are not limited to, temporary seeding, temporary mulching, sandbagging, slope drains, sediment basins, sediment check dams, erosion checks, artificial coverings, berms, and temporary construction entrances. The engineer may direct use of temporary erosion control features or methods other than those included in the original contract. Remove eroded sediment deposits outside the right-of-way immediately and repair the surface at no direct pay. When temporary erosion and pollution control measures are required due to the contractor's negligence or failure to install permanent controls, such work shall be performed at no expense to the department. The engineer may direct the contractor to discontinue operations until eroded sediment deposits have been cleared and the area restored.

When erosion control devices have been properly maintained and exceeded their useful life, they may be replaced with approval and paid for under appropriate pay items as directed.

204.06.1 Temporary Seeding: Seed in accordance with Section 717 or 739, except that ground preparation will be limited to blading the area. Apply lime or fertilizer in accordance with Section 718; however, lime or fertilizer may be omitted or the application rate reduced as directed.

204.06.2 Temporary Mulching: Furnish and apply mulch in accordance with Section 716. Mulch may be omitted or the application rate

reduced as directed. When permanent seeding operations begin, disc temporary mulch materials during ground preparation.

204.06.3 Sandbagging: Place sandbags as shown on the plans or as directed.

204.06.4 Baled Straw of Hay: Place baled straw or hay as directed to form checks or dams to control erosion and siltation. Properly stake or secure bales as shown on the plans, or as directed. Bury the bales as necessary to prevent scour under the bales. Drive a minimum of 2 stakes through each bale into the ground to hold in place.

204.06.5 Slope Drains: Construct slope drains in accordance with plan details or as directed, to prevent scour. Stabilize or protect the discharge area with temporary riprap. Cost of discharge area protection will be included under the slope drain item.

204.06.6 Sediment Basins: Construct sediment basins in accordance with plan details or as directed.

204.06.7 Sediment Check Drains: Construct check dams at locations shown on the plans or as directed. Construct check dams before clearing and grubbing or grading in the area is begun unless otherwise directed.

204.06.8 Silt Retention Systems: Furnish and construct silt retention systems at designated locations or other locations, as directed by the engineer. Posts for silt fencing shall be installed to a depth necessary to maintain the integrity of the system.

204.06.9 Berms: Construct earth berms as directed to divert the flow of water from erodible surfaces.

204.06.10 Temporary Construction Entrance: Construct temporary construction entrance(s) in the plans or as directed. Place a geotextile fabric underliner at the locations designated for temporary construction entrances before aggregate material is placed. Place and compact aggregate material to the required thickness as directed. This work also includes additional measures required to remove mud from truck tires, such as wash racks, etc.

204.06.11 Unforeseen Conditions: When unforeseen conditions are encountered, the engineer may direct the contractor to construct such temporary devices as required to control erosion during construction. Details may be developed jointly by the engineer and the contractor.

204.06.12 Maintenance of Erosion Control Features: Inspect temporary erosion control features at least once every 14 calendar days and within 24 hours after a rainfall event of 0.5 inch or greater. Documentation of these inspections must be maintained in the field office and provided to

the Department for review. Repair and maintain temporary erosion control features within seven calendar days after being instructed to do so by the engineer. Maintain the features as described below or replace as directed at no direct pay.

Repair damaged hay bales, "end runs" and undercutting beneath bales.

Remove sediment deposits when the deposits reach one-half the height of check dams. Ensure that the center of the check dam is lower than the edges. Correct erosion around the edges immediately.

Remove sediment deposits before they reach one-half the height of the silt retention systems, or as directed. If the fabric on the silt fence decomposes or becomes ineffective, promptly replace the fabric.

Maintain the construction entrance to allow for removal of mud from tires. Remove the sediment from the wash rack runoff once the wash rack is no longer performing as intended.

204.06.13 Removal of Temporary Erosion Control Features: Remove temporary erosion control features existing at the time of construction of permanent erosion control features or incorporate into the soil in such manner that no detrimental effect will result. The engineer may direct that temporary features be left in place. Remove sediment in sediment basins, silt fences, check dams, and other catchment areas. Reconstruct areas as necessary with acceptable soils in accordance with Section 203 at no direct pay.

204.07 PROTECTION DURING SUSPENSION OF OPERATIONS. Prior to the suspension of operations, shape the top of the earthwork in such manner as to permit runoff of rainwater and construct earth berms along the top edges of embankments to intercept runoff water. Provide temporary slope drains in the earth berm to carry runoff. When such preventive measures fail, immediately take other action as necessary to prevent erosion and siltation. The engineer may direct the contractor to perform other erosion control work during suspensions of contract time.

204.08 MEASUREMENT. When separate items for temporary erosion control devices are included in the contract, and the work is directed by the engineer, the quantities to be measured for temporary mulching and temporary seeding will be in accordance with Sections 716 and 717, respectively. Measure sandbagging by volume in cubic yards (cu m) with the measurement of sand being made in a batch box or other satisfactory means. Measure the number of hay bales placed; the length in feet of temporary slope drains measured along the ground surface; and silt fencing

measured along ground surface; the number of sediment basins and sediment check dams; and the number of construction entrances.

When temporary erosion control work is directed and is not covered by contract items, perform the work as extra work in accordance with 109.04.

The construction of temporary earth berms along edges of the roadway to prevent erosion during grading and subsequent operations will not be measured for payment.

In case of failure of the contractor to control erosion, or siltation, the engineer may employ outside assistance or use his own forces to provide the necessary corrective measures, and the cost thereof will be deducted from payments due the contractor for the work. Partial payments will be withheld until satisfactory temporary erosion control is established.

204.09 PAYMENT. Payment for temporary erosion control items that are included as contract items will be made at the contract unit prices. Payment for temporary mulching, and seeding will be made under Sections 716 or 717. Temporary erosion control work not covered by contract items that is ordered will be paid for in accordance with 109.04.

Temporary Sandbagging and Baled Hay will be paid for directly when used other than in construction of Temporary Slope Drains, Temporary Sediment Basins and Temporary Sediment Check Dams. When sandbags or baled hay are used in construction of slope drains, sediment basins and sediment check dams, payment will be made under these items.

Payment for devices used to correct unforeseen conditions will be made at the contract unit price for similar devices shown on the plans, or as extra work if plan details are not applicable.

Payment will be made under:

Item No.	Pay Item	Pay Unit
204-01	Temporary Sandbagging	Cubic Yard
204-02	Temporary Hay Bales	Each
204-03	Temporary Slope Drains	Linear Foot
204-04	Temporary Sediment Basins	Each
204-05	Temporary Sediment Check Dams	Each
204-06	Temporary Silt Retention Systems	Linear Foot
204-07	Temporary Stone Construction Entrance	Each

PART III—BASE COURSES

Section No. **Page No.**

301 Class I Base Course 151
302 Class II Base Course 168
303 In-Place Cement Stabilized and Treated Base Courses.....181
304 Lime Treatment.....192
305 Subgrade Layer 199
306 Scarifying and Compacting Roadbed 204
307 Permeable Bases 206
308 Vacant 210
309 In-Place Cement Treated Subgrade 211

Section 301
Class I Base Course

301.01 DESCRIPTION. Furnish and place class i roadway and shoulder base courses on a subgrade layer conforming to section 305 in accordance with these specifications and in conformance with the lines, grades, thicknesses, and typical cross sections shown on the plans or established. Control the selection, placement, mixing, and compaction of materials so that the completed base course is uniform and conforms to plan dimensions and other acceptance requirements.

Quality assurance requirements shall be as specified in the latest edition of the Department's publication titled *Application of Quality Assurance Specifications for Embankments and Base Course.*

When not specified, any of the following types may be used:

1. Soil Cement
2. Crushed Stone
3. Asphalt Concrete Base Course on Treated Layer
4. Recycled Portland Cement Concrete
5. Blended Calcium Sulfate

Select a base course type meeting the structural requirements for a specific pavement structure. Unless approved otherwise in writing, use the same type of Class I base course throughout the project in accordance with these specifications.

In areas inaccessible for mixing and compacting in turnouts, crossovers, or other isolated or irregular areas, portland cement concrete complying with Section 901, or asphalt concrete base course complying with Section 502, may be used in lieu of the specified base course material with approval. If using asphalt or portland cement concrete, the top half of the base thickness shall be asphalt or portland cement concrete. If used, portland cement concrete shall be a minimum thickness of 6 inches. The remaining thickness shall be the same type and construction as the top layer of embankment, treated layer, or subgrade. Do not place raw, untreated material between a treated embankment and the concrete. Place, consolidate, finish, and cure concrete as directed in accordance with Section 706.

Submit a dust control plan to address weather, sight clearance, operational procedures, traffic control, and any other project specific concerns. Failure to maintain sight clearance will result in the engineer stopping contractor operations.

The Department will identify dust-sensitive areas in the plans. In these specific areas, the dust control plan must also include environmental requirements.

301.02 MATERIALS. Materials shall comply with the following sections and subsections and requirements:

Asphalt Concrete	502
Portland Cement Concrete	901
Portland Cement	1001.01
Blended Hydraulic Cement	1001.02
Emulsified Asphalt	1002
Asphalt Materials	1002
Crushed Stone	1003.01 & 1003.03.1
Recycled Portland Cement Concrete	1003.01 & 1003.03.2
Water	1018.01
Blended Calcium Sulfate	1003.01 & 1003.03.3

301.02.1 Soils for Soil Cement: Soils for soil cement base course shall consist of materials that will stabilize with cement in accordance with DOTD TR 432. Such materials are those soils classified as A-1-a, A-1-b, A-2-4, A-2-6, A-4, and A-6 in accordance with DOTD TR 423. Do not use soil with a Liquid Limit greater than 35, a Plasticity Index greater than 12, or an organic content greater than 2 percent. Determine Liquid Limit and Plasticity Index in accordance with DOTD TR 428. Determine organic content in accordance with DOTD TR 413. Do not use soil with over 79 percent sand or 60 percent silt when tested in accordance with DOTD TR 407. Do not blend or treat soils which do not meet any of these requirements. Do not use topsoil. Obtain the material to be stabilized from outside right-of-way limits except as provided in 106.02.3. The engineer will take samples from the roadway or the stockpile in accordance with the Material Sampling Manual.

301.02.2 Portland Cement: Use Type I or II portland cement. The quantity of cement used shall be supported by proof of delivery.

301.02.3 Blended Hydraulic Cement: The cement shall be Type IP. The quantity of cement used shall be supported by proof of delivery.

301.02.4 Asphalt Concrete Base Course: The material requirements for asphalt concrete base course shall be as described in

Section 502. The top half of the base thickness shall be asphalt concrete and the remaining thickness shall be the same type and construction as the top layer of embankment, treated layer, or subgrade.

301.02.5 Treated Layer Under Asphalt Concrete Base Course: The treated layer under asphalt concrete shall consist of the same material and treatment as the top layer of embankment, including the prime coat requirements. Do not place raw, untreated material between a treated embankment and the asphalt concrete.

301.03 EQUIPMENT. Obtain approval of equipment prior to use.

301.03.1 Soil Cement:

301.03.1.1 General: Obtain certification for central mix plants in accordance with current Department procedures. Central mix plants may be either batch or continuous mix process and shall proportion aggregates, soils, and additives in a manner that will meet specification requirements. Provide safe, convenient facilities for sampling mixture components prior to their introduction into the weigh hopper or pugmill. Mixing units shall have no dead areas which allow materials to remain unmixed or which permit improperly mixed materials to be discharged into hauling or storage units. The minimum capacity shall be 100 tons per hour.

Provide a control system that will automatically stop plant operations when the material in any storage facility or working bin becomes empty or interrupts the flow of material. Do not permit the plant to operate unless this automatic control system is in good working order. When this control system malfunctions during production, discontinue operations immediately. Interlock the soil or aggregate feeder system with the feeder system for cement, additives, and water such that the proportions of the components of the approved mix design maintain continuously.

The complete process, including the plant with necessary auxiliary equipment and controls, operating procedures, and sampling and testing methods, require approval by the Department prior to use. Any modifications to plant equipment or operations shall be approved prior to use.

Provide plant site and project site laboratories conforming to Section 722 at no direct pay.

Measuring devices shall be subject to approval and shall be tested, inspected and certified by an approved independent scale service or the Weights and Measures Division, Louisiana Department of Agriculture and

Forestry, at no direct pay, every 90 days or as often as deemed necessary to ensure their accuracy.

Scales shall be accurate to ±0.5 percent throughout the range of use. Maximum graduation on scales shall be 0.1 percent of the rated scale capacity.

Equip the cement, soil and aggregate feeders, and water measuring devices with devices by which the rate of feed can be determined while the plant is in operation.

Water measuring devices shall be accurate to 1 percent of the metered quantity. Water meters shall have a maximum graduation of 1 gallon.

Methods and equipment for adding liquid additives shall be approved. Equipment for metering additives shall be capable of measuring the component to an accuracy of 3 percent of the required weight.

301.03.1.2 Batch Process: When using a batch mixing process, equip the mixer with a timing device, which will indicate by an obvious signal the completion of the mixing period. The time of mixing a batch shall begin after all components are in the mixer and shall continue until uniformly blended. The mixing time shall be approved. Weigh cement for each batch on scales separate from those weighing other components and meeting the requirements of this subsection.

301.03.1.3 Continuous Mix Process: When controlling a continuous mix operation by weight, provide belt scales for conveyor systems for all components except water.

301.03.1.4 Hauling Equipment: Haul the mixture from the plant in approved covered trucks that will maintain the moisture content and prevent segregation and the loss of fine material. The cover shall be waterproof, shall completely cover the bed of the truck, shall be equipped with tie downs, and shall not have any rips, tears, or holes.

301.03.1.5 Compaction Equipment: Compaction equipment shall be conventional sheepsfoot type roller or a self-propelled tamping foot compactor-type roller for initial compaction. The spikes shall be sufficient in size and number to provide uniform compaction for the full width and depth of the base course. Finish rolling shall be with a pneumatic tire roller.

301.03.2 Asphalt Concrete: Equipment for asphalt concrete shall conform to Section 503.

301.03.3 Crushed Stone and Recycled Portland Cement Concrete. Equipment used to mix crushed stone and recycled portland cement concrete shall produce a uniform blend conforming to the

requirements elsewhere herein. When using a central mix plant, it shall conform to 301.03.1.

301.03.3.1 Hauling Equipment: Haul crushed stone and recycled portland cement concrete in trucks with tight, smooth beds of sufficient size and condition to prevent segregation and the loss of material.

301.03.3.2 Compaction Equipment: Stone and recycled portland cement concrete compaction equipment shall be designed for the compaction of these materials and may be static or vibratory. Perform finish rolling with static, smooth steel wheel or pneumatic tire rollers. Pneumatic tires shall have smooth tread, shall be the same size and ply rating, and shall be inflated to a uniform pressure not varying more than ±5 psi between tires. Wheels shall not wobble and shall be aligned such that gaps between tires on one axle are covered by tires of the other axle.

301.03.4 Automatic Finishing Machine: For all Class I base courses except asphalt concrete, use an approved automatic finishing machine. The approved automatic finishing machine shall be capable of operating from an erected stringline or Global Positioning System (GPS) and laser system, and be capable of automatically controlling grade and cross slope conforming to 502.08.2.2.

301.04 STORAGE AND HANDLING OF MATERIALS PRIOR TO MIXING. Stockpiles of materials shall be uniform; separation into material sizes may be required. Equipment and methods for stockpiling shall be such that no segregation will result. Do not allow foreign material to be incorporated into the stockpiled materials. Do not use contaminated materials. Stockpiles shall be of uniform moisture content and well drained.

Stockpile soils and aggregates in dedicated stockpiles. Obtain approval of the stockpiled material prior to mixing with cement. Control the moisture content of the stockpiles so that the blended mixture, when tested in accordance with DOTD TR 403, shall be within ±2.0 percent of the optimum moisture content at the time of compaction. Equip storage facilities containing soil or fine aggregate with vibrators that will effectively vibrate the side walls of the feeder, prevent any accumulation of material, and ensure a constant, uniform supply of material to the mixing unit.

301.04.1 Storage of Cement: Transport cement in watertight conveyances and store in watertight buildings, silos, or other approved facilities to protect the cement from dampness or water intrusion. Cement that is contaminated, partially set, or contains lumps of caked cement will be rejected.

Cement shall be certified by the manufacturer in accordance with the Department's current procedure. Keep accurate records of cement deliveries and its use. Copies of these records shall be supplied to the engineer as required.

301.04.2 Soils for Soil Cement: Soils for soil cement shall be of one or more components, each meeting the requirements of 301.02.1.

301.04.3 Asphalt Concrete: Store and handle asphalt concrete in accordance with Section 502.

301.04.4 Crushed Stone and Recycled Portland Cement Concrete: Sample, test, and obtain approval of crushed stone and recycled portland cement concrete base courses from dedicated stockpiles prior to placement on the subgrade.

301.05 GENERAL CONSTRUCTION REQUIREMENTS. Place Class I base courses on a subgrade layer prepared in accordance with Section 305. Finished lift thickness shall be 9 inches maximum. The department may allow single lift construction for depths over 9 inches up to 12 inches based on a rolling pattern that obtains the required density.

301.05.1 Cement Stabilized Base Course: Mix all cement stabilized base courses in a central mix plant conforming to 301.03. Determine the percentage of cement for soil cement in accordance with DOTD TR 432 prior to mixing. Obtain samples for determination of the percent cement from material in stock piles. Depending on the type of cement and soil or soil-aggregate to be used, normal testing time to determine suitability of the soil and the required cement content may require up to 21 calendar days.

301.05.2 Asphalt Concrete: Construct asphalt concrete base course in accordance with Section 502. Construct the treated layer under asphalt concrete base course in accordance with Section 305.

301.05.3 Crushed Stone, Recycled Portland Cement Concrete, and Blended Calcium Sulfate: Do not permit crushed stone, recycled portland cement concrete, and blended calcium sulfate base courses to segregate during construction. Do not allow water added for facilitating compaction to cause moisture damage to the subgrade layer.

Do not use blended calcium sulfate in areas needed to facilitate traffic control. Do not place blended calcium sulfate within 10 feet of metal drainage structures. The contractor will be allowed to substitute any untreated Class I base course material listed in 301.01. Use flowable fill

under Section 710, or other approved backfill material in Section 701 to backfill the drainage structure.

301.06 MIXING OF SOIL CEMENT. Mix soil cement materials in a central mix plant by either batch or continuous mixing process. Soils, aggregates, additives, and water may be proportioned by either weight or volume. Calibrate the plant by weight and equip with a means to readily verify the quantity of each component. The time and points at which introducing each component into the mixing process must be approved. Combine and mix the components to produce a uniform, well-blended mixture. The total quantity of materials introduced into the mixing unit shall not exceed the approved capacity of the mixer.

When using a continuous mix process, draw the soils and aggregates from the storage area by a feeder or feeders that continuously supply the correct amount of soil or aggregate in proportion to the cement. Arrange the soil and aggregate storage areas or feed bins so that the proportion of each size can be separately adjusted if using more than one size.

Blend individual aggregates and soils within 2 percent of the individual weight of that component. The total weight of aggregate and soils shall be within 1 percent of the required weight of the total material. Incorporate cement within 1.0 percent of the required weight of cement.

Determine optimum moisture of the mixture in accordance with DOTD TR 415 or TR 418. Do not allow the percentage of moisture in the mixture, based on dry weight, to vary from optimum moisture by more than ±2.0 percent at the time of compaction. Control moisture content at the time of mixing so that these tolerances are met. When these tolerances are not met and satisfactory control adjustments are not being made, discontinue operations until proper adjustments and uniform operations are established.

301.07 QUALITY CONTROL OF PLANT OPERATIONS. Provide a Certified Soil and Base Course Technician at the plant at all times when the plant is producing material for the Department.

The Certified Soil and Base Course Technician shall be capable of conducting any test or analysis necessary to put the plant into operation and producing cement stabilized mixtures conforming to the specifications. Do not begin daily plant operations without the Certified Soil and Base Course Technician present. The Soil and Base Course Technician certification will be awarded by the Department upon satisfactory completion of the Department's requirements.

301.07.1 Soil Cement: Implement and maintain quality control of materials during handling, storing, blending, mixing, and transport. Adjust equipment to provide the approved percent of each component in the mixture at optimum moisture content. Provide suitable equipment for the determination of moisture content, gradation, proper pulverization, and proper combination of components as required.

Build and maintain stockpiles of soils and aggregates in accordance with 301.04 and perform testing as necessary to ensure that materials delivered to the plant site meet the Department's specifications prior to requesting acceptance sampling and testing. Maintain the quality of materials placed in dedicated stockpiles already approved for use. When inspection by the Department indicates contamination or segregation of dedicated stockpiles, the affected materials will be rejected. Remove the rejected materials from the dedicated stockpile. Materials shall be sampled, tested, and approved by the Department prior to inclusion in an approved dedicated stockpile.

Incorporate water into the mixing chamber through a multi nozzle spray bar capable of spraying water uniformly, leaving no wet or dry areas. Add water after mixing soils, soil aggregates, and cement.

The contractor's Certified Soil and Base Course Technician shall continually monitor plant operations to ensure that systems function properly and that the proportions of materials are correct. At the beginning of each day's operation, check the percent cement being incorporated into the mixture, and then against the plant's print-out of cumulative totals every two hours. The contractor's Certified Soil and Base Course Technician shall test for moisture content of the soil or aggregate components in accordance with DOTD TR 403 at the beginning of each day's operations and at least twice per day during continuous operation. The contractor's Certified Soil and Base Course Technician shall test the moisture content of the mixture including the cement, as needed, to control the finished product within specification requirements. When specifying a composite gradation for the soil or aggregate material, check the gradation at least twice per day in accordance with DOTD TR 112 and TR 113. Document tests in accordance with the Department's current procedures.

The contractor's Certified Soil and Base Course Technician shall check the percent pulverization in accordance with DOTD TR 431 at least twice per day. At least 80 percent shall pass the No. 4 sieve.

When any quality control test does not meet the applicable specifications, make immediate corrections and notify Department personnel of the change, or otherwise the operations shall be discontinued.

301.07.2 Asphalt Concrete: Asphalt concrete plant operations shall conform to Section 502.

301.08 LOADING, TRANSPORTING, AND PLACING ON SUBGRADE. Do not allow base course materials to segregate during loading. Cover soil cement mixtures immediately with an approved waterproof cover to prevent loss of moisture, fines, or exposure to the elements. Tie the cover securely in place and do not remove until placement of the mixture.

Do not allow transportation, placing, and spreading methods to damage the subgrade. Place and spread sufficient material to obtain required width and compacted thickness within the tolerances set forth in 301.16. Place and spread soil cement within one hour of mixing cement with the soils or soil aggregates. Do not contaminate base course materials with subgrade layer. Any contamination will require retesting and correction of deficiencies. Do not place or spread base course material on portland cement concrete or asphalt concrete pavements. Do not damage pavement surfaces, edges, or joints during construction. Add water or use other suitable means to prevent dust during the transporting and placing of blended calcium sulfate.

301.09 GRADE AND CROSS-SLOPE CONTROL. Unless otherwise specified, construct Class I Base Courses (except asphalt concrete) to the required grade and cross slope, using an automatic finishing machine controlled from an erected stringline or GPS and laser system conforming to 502.08.2.2.

301.10 COMPACTING AND FINISHING.

301.10.1 Soil Cement: Compact the mixture immediately after placement. Complete initial compaction with an approved conventional sheepsfoot-type roller or a self-propelled tamping foot compactor-type roller in such a manner that no internal laminations occur in the completed base course. Use a pneumatic-tire roller for final compaction, operated so that no surface laminations occur. Keep the surface uniformly moist during compaction and shaping.

During the compaction and finishing, correct low-riding areas or areas with surface imperfections that need correction using fresh material. Thoroughly scarify the surface before placing and blending new base material. Complete final compaction of the corrected surface within the

same time limit applied to the initial placement of base materials as outlined in this subsection.

Complete compaction and initial finishing within two hours after initial mixing of cement with base course materials. Each lift of base course shall meet the requirements of 301.16. After compacting the base, uniformly apply water as needed to maintain the proper moisture content for intermediate finishing (tight blading). Thoroughly roll and finish the surface to grade; remove loosened material from the section. Finish rolling the surface with either a pneumatic-tire or static steel-wheel roller to provide a smooth, tightly knit surface conforming to finish grade or slightly higher.

Use an automatic finishing machine for final finishing and provide a surface free of cracks, ridges, waves, surface laminations, or loose material. Do not allow the cross-slope to vary by more than ±0.003 foot/foot. Do not allow the grade to vary by more than ±0.04 feet from plan grade. In areas inaccessible to the automatic finishing machine, final finishing will not be required, provided the grade and cross-slope satisfies the project engineer. Conduct final finishing far enough in advance to allow the Department to perform width and depth check tests.

At places inaccessible to rollers, such as edges adjacent to curb and gutter sections, compact the mixture using devices that will obtain the specified density without damage to adjacent structures.

Do not operate transport vehicles and heavy construction equipment on compacted base course for a period of 72 hours after placement.

301.10.2 Asphalt Concrete Base: Compaction and finishing requirements shall be as follows:

1. Compact and finish the asphalt concrete layer in accordance with Section 502. Do not use vibratory rollers when such use is detrimental to the underlying layers or areas with high water table.

2. The treated layer under asphalt concrete shall meet the requirements of the subgrade layer.

301.10.3 Crushed Stone Recycled Portland Cement Concrete: Compact and finish the same as specified in 301.10.1, except that the time limitations will not apply. Do not allow water added to facilitate compaction to damage underlying materials. Do not use vibratory rollers when it detrimental to the underlying layers or in areas with high water table.

301.10.4 Blended Calcium Sulfate: During placement of blended calcium sulfate, the percentage of moisture in the mixture, by dry weight, shall not vary from the optimum moisture by more than ±2.0 percent. After application of water, allow the moisture to reach equilibrium in the base

before applying rolling techniques. Roll blended calcium sulfate to the edge of the embankment or subgrade. Compact each layer to at least 95 percent of maximum dry density before the next layer is placed. Determine optimum moisture and maximum density in accordance with DOTD TR 418 Method G modified to include a maximum drying temperature of 140°F.

Test all blended calcium sulfate base by proof rolling immediately prior to placement of surfacing material, including asphalt binder. Correct any irregularities or soft spots prior to placement of the surfacing material. Proof roll by using a load of 25 tons in a 12 to 14 cubic yard tandem dump truck with ten wheels or approved loaded truck determined by the project engineer. Proof rolling shall be a minimum of 5 passes in each direction at the same locations and at a maximum vehicle speed of 3 mph. Any rain event on the project site between the proof rolling and placement of the surfacing will require an additional proof rolling, as noted above.

301.11 QUALITY CONTROL OF ROADWAY OPERATIONS. Control the selection, placement, compaction, moisture content, density, thickness, width, surface finish, and grade so that the completed base course is uniform and conforms to plan dimensions and other acceptance requirements as provided herein. Construct the base course so that contamination, segregation, soft spots, wet spots, laminations, and other deficiencies are prevented. Do not damage the subgrade layer during compaction operations. Perform tests to control moisture content, thickness, width and density.

301.12 PROTECTION AND CURING.

301.12.1 Soil Cement and Treated Layer Under Asphalt Concrete: Upon completion of intermediate finishing, immediately protect the base course against drying by applying an asphalt curing membrane in accordance with Section 506. Place asphalt curing membrane on the same day as treatment. Maintain complete coverage of curing membrane from initial application until the placement of the next course. When allowing traffic, including construction equipment, on the base course, place at least the first lift of surfacing within 30 calendar days unless otherwise directed.

301.12.2 Crushed Stone, Recycled Portland Cement Concrete, and Blended Calcium Sulfate: Cover the completed base course with asphalt prime coat in accordance with Section 505 as soon as practical to prevent water infiltration due to rainfall. Maintain complete coverage of the asphalt prime coat from initial application until the placement of the next course. When allowing traffic, including construction

equipment, on the base course, the prime coat application may be delayed. However, place the first lift of surfacing within 30 calendar days unless otherwise directed.

301.13 CONSTRUCTION JOINTS. On soil cement base courses, tie each day's construction into the completed work of the previous day by a straight transverse construction joint. Form the joint by cutting back into the total width of the base to form a true vertical face free of loose and broken material at a point where the base conforms to the typical section shown on the plans.

Longitudinal joints constructed between parallel lanes or similar joints between lanes and ramps, etc., shall be reasonably vertical and free of contaminated loose and/or broken material.

Construct the base at all joints so that the materials at and adjacent to the joint are stable, uniformly compacted and tightly knit.

301.14 MAINTENANCE OF BASE COURSE. Protect the completed base course from damage due to public traffic or the contractor's operations, and satisfactorily maintain the completed base course including the asphalt curing membrane or prime coat. Repair damaged base course at no direct pay. When requiring patching of the base course, in addition to removing damaged or unsound base course, remove a sufficient width and depth of base course to ensure satisfactory placement of patching material. The engineer must approve the type of patching material before use. Patching or other base course repair shall restore a uniform surface, shall conform to the requirements of the material being used, and shall be completed before paving operations begin. Patch failures detected during paving.

When not requiring maintenance of traffic, allow neither public traffic nor construction traffic on the completed base course during the 72-hour curing period. When requiring maintenance of traffic and conditions permit, route both public traffic and construction traffic off the completed base course onto shoulders or other suitable areas during the 72-hour curing period. When permitting traffic to use the completed base course subsequent to the 72-hour curing period and prior to construction of the surface course, further protect the base by additional applications of asphalt curing membrane or prime coat in accordance with 301.12 at no direct pay.

Prior to surface course construction, correct deficiencies and weak spots, clean the base course surface, repair any damages caused by traffic, and keep surface true to grade and cross-section at no direct pay. Apply additional

asphalt curing membrane or prime coat as directed at no direct pay. Complete this work at least 24 hours prior to construction of the next layer.

When allowing traffic, including construction equipment, on the asphalt concrete surfacing, place the first lift of surfacing within 30 calendar days.

301.15 WEATHER LIMITATIONS. Do not construct the base course when the subgrade or stockpiles are frozen, when raining, when the ambient air temperature is below 35°F, in the case of cement treated bases, or the temperature is forecasted by the U.S. Weather Service to be 25°F or less within the 24-hour period following placement.

301.16 ACCEPTANCE REQUIREMENTS. Soils and aggregates will be sampled and tested for acceptance by the department prior to the addition to a dedicated stockpile. Sampling will be in accordance with the materials sampling manual.

Plant operations will be checked for uniformity and the proportioning of the components. The percent cement will be checked at least twice per day in accordance with DOTD TR 436. The percent cement being incorporated into the mixture shall not be more than 0.1 percent by weight of the total material below the approved percent cement, or operations shall be discontinued until corrections have been made.

The moisture content of the soil cement or cement stabilized mixtures will be tested at placement at least twice per day for conformance to optimum moisture content in accordance with DOTD TR 403. When the moisture content is not within specification limits, take immediate corrective actions or operations shall be discontinued. When the moisture content is not within specification limits, the engineer may require removal of the in-place material.

Pulverization of the soil cement or cement stabilized mixtures will be tested in accordance with DOTD TR 431 at the plant at least twice per day. At least 80 percent shall pass the No. 4 sieve.

Base courses, except asphalt concrete, will be checked for determining acceptance in increments of 1000 linear feet per roadway or 2000 linear feet per shoulder constructed separately. Asphalt concrete base course will be accepted in accordance with Section 502.

301.16.1 Density Requirements: Upon completion of compaction operations, base course density, except asphalt concrete, will be determined in accordance with DOTD TR 401. Density requirements of asphalt concrete base course shall be in accordance with Section 502. Density requirements

for Class I base course materials other than asphalt concrete shall be a minimum of 95.0 percent maximum dry density in accordance with DOTD TR 418.

301.16.1.1 Soil Cement and Treated Layer Under Asphalt Concrete: When the density test value for the section falls below 95.0 percent, a payment adjustment will be applied in accordance with Table 301-1.

Table 301-1
Density Acceptance and Payment Schedule

Density Test Value, (percent)	Percent of Contract Unit Price
95.0 & above	100
94.0 to 94.9	90
93.0 to 93.9	75
Below 93.0	50 or Remove [1]

[1] At the option of the Chief Engineer.

301.16.1.2 Asphalt Concrete: The density requirements for asphalt concrete base course shall be as specified in Section 502.

301.16.1.3 Crushed Stone, Recycle Portland Cement Concrete, and Blended Calcium Sulfate: When any test value is less than 95.0 percent maximum dry density, continue compaction until the density is obtained.

The acceptance requirements for blended calcium sulfate base course shall be the same as stone base course with the following modifications. Upon completion of compaction operations, determine the density in accordance with DOTD TR 401 except that all moisture content determinations for density calculations shall be conducted by oven drying the material for 24 hours at 140°F. A forced draft type oven capable of maintaining the temperature shall be provided by the contractor for field moisture content determination for density control.

301.16.2 Thickness Tolerances: The thickness of the completed base course will be determined in accordance with DOTD TR 602. The under-thickness tolerances for asphalt concrete base course shall be in accordance with Section 502.

Under-thickness of base courses, except asphalt concrete, shall not vary from plan thickness in excess of 1/2 inch. Correct base course thickness deficiencies in excess of this tolerance as specified herein at no direct pay.

When using reconstruction as a method of correction, this tolerance shall apply.

Over-thickness may be waived at no direct pay when meeting grade requirements. When not meeting grade requirements and not permitting grade adjustments, correct as required at no direct pay.

Failing areas will be isolated longitudinally for purposes of correction for the entire width.

When using crushed stone base or recycled concrete base over soil cement base, the individual base layer tolerances shall be as noted above, and the total base course under-thickness shall not exceed 3/4 inch.

301.16.2.1 Soil Cement and Treated Layer Under Asphalt Concrete: When not permitting grade adjustments, correct under-thickness deficiencies by removing and replacing the full depth of base course in deficient areas with one of the following materials:

1. The same type of base course.
2. Asphalt concrete complying with Section 502.
3. Concrete complying with Section 901.

When permitting grade adjustments, under-thickness deficiencies may be corrected by furnishing and placing a supplemental layer of asphalt concrete conforming to Section 502 for the full width of base course in lieu of removing and replacing deficient base course. Thickness of the supplemental layer of asphalt concrete shall be in accordance with Table 301-2 as follows.

Table 301-2
Supplemental Asphalt Concrete Layer Thickness

Under-Thickness, Inches	Minimum Thickness of Supplemental Asphalt Concrete, Inches [1]
$^3/_4$ to $1^1/_4$	$1^1/_4$
$1^1/_2$ to $1^3/_4$	$1^1/_2$
2 to $2^1/_2$	2
Over $2^1/_2$	Remove and Replace [2]

[1] May be included in the subsequent lift.

[2] At the option of the Department after investigation.

301.16.2.2 Asphalt Concrete Base Course: When not permitting grade adjustments, correct under-thickness in excess of the tolerances given in 502.12 to plan thickness by removing and replacing the full depth of base course. When permitting grade adjustments, correct under-

thickness by placing and compacting a $1^1/_4$ inch thick minimum supplemental layer of asphalt concrete complying with Section 502 at no direct pay.

301.16.2.3 Crushed Stone and Recycled Portland Cement Concrete: When permitting grade adjustments, correct under-thickness in excess of 1/2 inch to plan thickness by furnishing, placing, mixing, reworking, shaping, and compacting an additional thickness of the same type of base course material. When not permitting grade adjustments, remove and replace the base course.

301.16.3 Width Requirements: The width of the completed base course will be determined in accordance with DOTD TR 602. Roadway base course width shall not vary from plan width in excess of +6 inches. Shoulder base course width shall not vary from plan width in excess of +3 inches. Do not allow underwidths for shoulder or roadway bases. When the base course for both roadway and shoulders are constructed at the same time, the 6-inch tolerance will be applied. Correct base course width deficiencies in excess of the above tolerances as follows at no expense to the Department:

301.16.3.1 Overwidth: Overwidths on all base courses may be waived at no direct pay.

301.16.3.2 Underwidth: Correct underwidth of all base courses to plan width by furnishing and placing additional materials; however, the width of widening materials shall be no less than 12 inches. The thickness of the widening shall be plan thickness. Materials for widening deficient base course shall be one of the following:

1. The same type of base course.
2. Asphalt concrete complying with Section 502.
3. Concrete complying with Section 901.

301.16.4 Correction of Other Deficiencies. Correct deficiencies in surface finish, grade, contamination, segregation, soft spots, wet spots, laminations, and other deficiencies at no direct pay. Correct these deficiencies by removing and replacing or as directed.

301.16.5 Grade and Cross-Slope: The finished grade shall be within ±1/2 inch of the established grade. The cross-slope shall not vary by more than ±0.003 foot/foot.

301.17 MEASUREMENT. The quantities of Class I base course for payment will be the design volumes or areas specified in the plans and adjustments thereto. Design quantities are based on the horizontal dimensions and theoretical compacted thickness of the completed base

course shown on the plans. Design quantities will be adjusted if the engineer makes changes to adjust to field conditions, plan errors are proven, or design changes are necessary.

301.18 PAYMENT. Payment for Class I base course will be made at the contract unit price, adjusted as specified in 301.16 and the following provisions, which include furnishing and placing required base course materials, portland cement, portland-pozzolan cement, water, grade control, asphalt curing membrane, and prime coat.

When the density test value for the section falls below 95.0 percent, a payment adjustment will be applied in accordance with Table 301-1.

Failure to add the specified amount of cement in soil cement will result in a payment adjustment in accordance with Table 301-3 below. For materials other than asphalt concrete, payment adjustments that are made for more than one deficiency shall be cumulative. Any payment adjustment in asphalt concrete shall be in accordance with Section 502 and shall apply to the cubic yard total quantity of base course.

Table 301-3
Payment Adjustment Schedule

	Percent of Contract Unit Price			
	100	90	80	50 or Remove and Replace [1]
Cement content (Percent by dry weight) less than required	0.0 – 0.1	0.2 – 0.4	0.5 – 1.0	more than 1.0

[1] At the option of the Chief Engineer.

Payment will be made under:

Item No.	Pay Item	Pay Unit
301-01	Class I Base Course	Cubic Yard
301-02	Class I Base Course ____in Thick	Square Yard
301-03	Class I Base Course for Shoulders	Cubic Yard
301-04	Class I Base Course for Shoulders _____in Thick	Square Yard

Section 302
Class II Base Course

302.01 DESCRIPTION. Furnish and place Class II roadway and shoulder base course on a prepared surface in accordance with these specifications, in conformity with the lines, grades, thickness, and typical sections shown on the plans or established. Control the selection, placement, mixing and compaction of materials so that the completed base course is uniform and conforms to plan dimensions and other acceptance requirements.

Quality assurance requirements shall be as specified in the latest edition of the Department's publication titled *Application of Quality Assurance Specifications for Embankment and Base Course.*

When not specified, any of the following types may be used:

1. Soil Cement
2. Crushed Stone
3. Asphalt Concrete Base Course on Embankment Layer
4. Recycled Portland Cement Concrete
5. Blended Calcium Sulfate

Unless approved otherwise in writing, use the same base course material throughout the project in accordance with these specifications.

In areas that are inaccessible for mixing and compacting, in turnouts, crossovers, and in other isolated or irregular areas, portland cement concrete complying with Section 901 or asphalt concrete base course complying with Section 502 may be used in lieu of the specified Class II base course material with approval. If using asphalt or portland cement concrete, the top half of the base course thickness shall be asphalt or portland cement concrete. If used, portland cement concrete shall be a minimum thickness of 6 inches. The remaining thickness shall be the same type and construction as the top layer of embankment, treated layer, or subgrade. Do not place raw, untreated material between a treated layer and the concrete. Place, consolidate, finish, and cure concrete as directed in accordance with Section 706.

Submit a dust control plan to address weather, sight clearance, operational procedures, traffic control, and any other project specific concerns. Failure to maintain sight clearance will result in the engineer stopping contractor operations.

The Department will identify dust sensitive areas in the plans. In these specific areas, the dust control plan must also include environmental requirements. In order to meet air quality standards, the contractor may be required to use central plant mixing of cement treated mixtures in dust

sensitive areas at no direct pay. The contractor may use other types of Class II base course in dust sensitive areas at no direct pay.

302.02 MATERIALS. Materials shall comply with the following sections or subsections and requirements.

Geotextile Fabric	203.11 & 1019
Asphalt Concrete	502
Portland Cement Concrete	901
Portland Cement	1001.01
Blended Hydraulic Cement	1001.02
Asphalt Materials	1002
Stone	1003.01 & 1003.03.1
Recycled Portland Cement Concrete	1003.01 & 1003.03.2
Blended Calcium Sulfate	1003.01 & 1003.03.3
Water	1018.01

302.02.1 Soils for Soil Cement: Soils for soil cement base course shall consist of materials that will stabilize with cement in accordance with DOTD TR 432. Such materials are those soils classified as A-1-a, A-1-b, A-2-4, A-2-6, A-4, and A-6 in accordance with DOTD TR 423. Do not use soil with a Liquid Limit greater than 35, a Plasticity Index (PI) greater than 15, or an organic content greater than 2 percent.

Determine Liquid Limit and Plasticity Index in accordance with DOTD TR 428. Determine organic content in accordance with DOTD TR 413. Do not use soil with over 79 percent sand or 60 percent silt when tested in accordance with DOTD TR 407. Soils may be blended to adjust the percentages of sand or silt to meet specification requirements; however, in-place blending is not allowed. Do not blend or treat soils that do not meet Liquid Limit or PI requirements to reduce Liquid Limit or PI. Do not use topsoil. Obtain the material to be stabilized from outside right-of-way limits except as provided in 106.02.3. The engineer will take samples from the roadway or stockpile in accordance with the Material Sampling Manual. The District Laboratory Engineer will approve materials prior to blending and the final product.

Acceptance of soils with organic contents between 2 to 5 percent may be allowed based on determination of increased cement percentages in accordance with DOTD TR 432 Method B or C, whichever is applicable, using the design compressive strength criteria listed for stabilization.

Maximum cement rate allowed will be 14 percent by volume. Perform the laboratory testing specified above at no expense to the Department. The laboratory used must be approved by the Materials Engineer Administrator.

Take samples in the presence of the engineer in accordance with the Material Sampling Manual. Obtain sufficient material to provide the District laboratory with approximately 200 pounds of the base material to be treated for verification testing. The engineer will take immediate possession of the verification samples. Also provide approximately 10 pounds of the selected cementitious material to the District laboratory. Provide materials for verification testing at no cost to the Department.

Submit all design data used to determine the recommended cement rate to the District Laboratory Engineer for approval. Prior to approval of the design, the District Laboratory will perform verification testing. Verification testing by the District Laboratory will consist of molding, curing and testing a minimum of three specimens in accordance with TR 432, at the percentage of cementitious material and at the optimum moisture determined by the contractor's laboratory. The recommended cement rate will be considered verified if test results indicate that the minimum strength criteria have been met and that the optimum moisture are within 2 percent of that submitted by the contractor. Normal testing time for verification testing may require up to 21 calendar days. Do not begin construction operations until the design is approved.

302.02.2 Portland Cement: Use Type I or II portland cement. The quantity of cement used shall be supported by proof of delivery.

302.02.3 Blended Hydraulic Cement: The cement shall be Type IP. The quantity of cement used shall be supported by proof of delivery.

302.02.4 Asphalt Concrete Base Course: The material requirements for asphalt concrete base course shall be as described in Section 502. The top half of the base thickness shall be asphalt concrete and the remaining thickness shall be the same type and construction as the top layer of embankment, treated layer, or subgrade. Do not place raw, untreated material between a treated layer and the asphalt concrete.

302.02.5 Blended Calcium Sulfate: Take gradation samples in accordance with 1003.03.3 from the dedicated stockpiles at the point of material origin.

302.03 EQUIPMENT. Obtain approval of equipment prior to use. When using in-place mixing, the equipment shall conform to 303.03. When using

central mixing, the equipment shall conform to 301.03.1. Compaction equipment shall conform to 301.03.1.5.

302.04 GENERAL CONSTRUCTION REQUIREMENTS. Place base course material on a subgrade prepared in accordance with Sections 203, 304, 305, 306 as specified. Construct asphalt concrete base course in accordance with Section 502. Do not use blended calcium sulfate in areas needed to facilitate traffic control. Do not place blended calcium sulfate within 10 feet of metal drainage structures. The contractor will be allowed to substitute any untreated Class II base course material listed in 302.01.

Finished lift thickness shall be 9 inches maximum. The Department may allow single lift construction for depths exceeding 9 inches and up to 12 inches based on a rolling pattern that obtains the required density.

Use a Class D geotextile separator fabric if an aggregate base course is to be placed on untreated or lime-treated soils.

302.05 MIXING.

302.05.1 Soil Cement: Combine soil with cement and water by in-place mixing or in a central plant and shape on the subgrade. When in-place mixing is done, spread and mix the cement prior to adding any more water.

A minimum of 70 percent of the pulverized soil, as determined by DOTD TR 431, shall pass the No. 4 sieve after mixing. Determine the optimum moisture of the mixture in accordance with DOTD TR 415 or TR 418. The percentage of moisture in the mixture, by dry weight, shall not vary from the optimum moisture by more than ±2.0 percent at the time of compaction when tested in accordance with DOTD TR 403.

302.05.1.1 In-Place Mixing: Samples to determine optimum moisture and maximum dry density will be taken by the project engineer. Determine maximum dry density in accordance with DOTD TR 415 or TR 418 and in-place density in accordance with DOTD TR 401. After placement of soil and prior to mixing with cement, shape the soil to required section and compact to at least 93.0 percent of maximum dry density at the required grade.

From materials sampled in-place on the project, the engineer will determine the percentage of cement in accordance with DOTD TR 432 prior to mixing. Depending on the type of cement and soil to be used, normal testing time to determine required cement content may require 21 calendar days. Add water as needed to bring the moisture content of the mixture within the tolerance and uniformly mix with the materials. During the

mixing process, add water only through the spray bar of the in-place mixer which is adjusted to provide uniform coverage across the completed width of the roadway for the full depth of the base. Do not allow wet streaks or spots.

The method of cement distribution shall be such that the amount of cement used can be readily determined. Determine the spread rate of cement in accordance with DOTD TR 436.

When the moisture content is not within ±2.0 percent of optimum, discontinue operations and do not resume until the moisture content is controlled within this tolerance. Do not place and pulverize more than one transport until moisture content is within ±2.0 percent of optimum.

302.05.1.2 Central Plant Mixing: Mixing in a central mix plant shall conform to Section 301. When using central plant mixing, a reduction of 1.0 percent in the volume of cement required will be permitted.

302.05.2 Crushed Stone and Recycled Portland Cement Concrete: Do not allow crushed stone or recycled portland cement concrete base courses to segregate during construction. Take gradation samples in accordance with 1003.03 from the dedicated stockpiles at the point of material origin.

302.05.3 Blended Calcium Sulfate: Do not use for crossovers, drives, or in areas needed to facilitate traffic control. In lieu of blended calcium sulfate, substitute any untreated Class II base course material listed in 302.01. Do not place blended calcium sulfate within 10 feet of metal drainage structures. Use approved backfill material in Section 701.

302.06 TRANSPORTING AND PLACING ON SUBGRADE. Use only transportation and spreading methods that do not damage the subgrade. Place and spread sufficient base course material to obtain required width and compacted thickness within the tolerances set forth in 302.12. Do not allow subgrade material to contaminate the base course. Any contamination will require retesting and correction of deficiencies. Do not place, spread, or mix base course material on portland cement concrete or asphalt concrete pavements. Do not allow base course construction operations to damage adjacent pavement surfaces, edges and joints. Add water or use other suitable means to prevent dust during the transporting and placing of materials.

302.07 COMPACTING AND FINISHING.

302.07.1 General: The finished base course shall have a smooth, uniform, closely knit surface, free from ridges, waves, laminations or loose material. Thoroughly roll the surface and finish to grade. The cross-slope shall not vary by more than ±0.003 foot/foot. Density requirement shall be in accordance with 302.12. Do not damage the subgrade layer during compaction operations.

302.07.2 Soil Cement: When using central plant mixing, compact the material and finish in accordance with 301.10, except that the automatic grade machine will not be required. When using in-place mixing, compact the material and finish in accordance with 303.06.

Begin mixing operations within one hour of placement. Complete compaction and finishing operations within three hours after initial mixing of cement with base course materials. Upon expiration of the three-hour period after initial mixing, only intermediate finishing (tight blading) of the base course surface will be allowed. Dispose of excess bladed material. Do not drift bladed material along the base. Use stabilized material in the base course except for that small amount necessary for tight blading. Excessive blading, exceeding 10 percent of the base thickness, to achieve plan depth will not be allowed. Complete operations, including tight blading, within 24 hours of mixing. The finished base course shall have a smooth, uniform, closely-knit surface, free from ridges, waves, laminations, or loose materials. Do not spread cement within 2 hours of sunset, unless otherwise approved by the project engineer.

302.07.3 Crushed Stone and Recycled Portland Cement Concrete: Compact these materials using an approved sheepsfoot-type roller and finish-roll with an approved pneumatic tire roller or a smooth steel wheel roller. Keep the surface uniformly moist during compaction and final finishing.

302.07.4 Asphalt Concrete: Compact and finish asphalt concrete in accordance with Section 502. The soil layer shall be compacted and finished in accordance with the top layer of embankment or subgrade.

302.07.5 Blended Calcium Sulfate: During placement of blended calcium sulfate, the percentage of moisture in the mixture, by dry weight, shall not vary from the optimum moisture by more than ±2.0 percent. After application of water, allow the moisture to reach equilibrium in the base before applying rolling techniques. Roll blended calcium sulfate to the edge of the embankment or subgrade. Compact each layer to at least 95 percent of maximum dry density. Determine optimum moisture and maximum

density in accordance with DOTD TR 418 Method G modified to include a maximum drying temperature of 140°F.

Proof roll by using a load of 25 tons in a 12 to 14 cubic yard tandem dump truck with ten wheels or approved loaded truck determined by the project engineer. Proof rolling shall be a minimum of 5 passes in each direction at the same locations and at a maximum vehicle speed of 3 mph.

Test all blended calcium sulfate base by proof rolling immediately prior to placement of surfacing material, including asphalt binder. Correct any irregularities or soft spots prior to placement of the surfacing material. Any rain event on the project site between the proof rolling and placement of the surfacing will require an additional proof rolling as noted above.

302.08 QUALITY CONTROL OF ROADWAY OPERATIONS. Control the selection, placement, compaction, cement spread, mixing, moisture content, density, thickness, width, surface finish, cross-slope, and grade to produce a completed base course that is uniform and conforms to plan dimensions and other acceptance requirements as provided herein. Control operations to prevent contamination, segregation, soft spots, wet spots, laminations, and other deficiencies. Perform tests necessary to adequately control the work.

302.09 PROTECTION AND CURING.

302.09.1 Soil Cement: Upon completion of intermediate finishing, immediately protect the base course against drying by applying an asphalt curing membrane in accordance with Section 506. Place asphalt curing membrane on the same day as treatment. Maintain complete coverage of the curing membrane from the initial application until the placement of the next course. When allowing traffic, including construction equipment, on the base course, place at least the first lift of surfacing within 30 calendar days unless otherwise directed.

302.09.2 Crushed Stone, Recycled Portland Cement Concrete, Soil Layer Under Asphalt Concrete, and Blended Calcium Sulfate: Cover the base course with asphalt prime coat in accordance with Section 505 as soon as practical to avoid water infiltration due to rainfall. Maintain complete coverage of asphalt prime coat from the initial application until the placement of the next course.

302.10 MAINTENANCE OF BASE COURSE. Protect the base course from damage from public traffic or the contractor's operations and

satisfactorily maintain the base course, including the asphalt curing membrane or prime coat. Repair damaged base course at no direct pay. When requiring patching of the base course, in addition to removing damaged or unsound base course, remove a sufficient width and depth of sound base course to ensure satisfactory placement of patching material. The engineer's approval of the type of patching material will be required before use. Patching or other base course repair shall restore a uniform surface, shall conform to the requirements of the material being used, and shall be completed before paving operations begin. Patch any failures detected during paving.

Do not allow public traffic or construction traffic on the completed base course during the 72-hour curing period. If conditions permit, route both public traffic and construction traffic off the completed base course onto shoulders or other suitable areas during the 72-hour curing period. Traffic may be permitted on the base course during the curing period if conditions warrant and approved by the engineer. When permitting traffic to use the completed base course subsequent to the 72-hour curing period and prior to construction of the surface course, further protect the base by additional applications of asphalt curing membrane or prime coat in accordance with 301.12 at no direct pay.

Prior to surface course construction, correct deficiencies and weak spots, clean the base course surface, repair any damages caused by traffic, and keep the surface true to grade and cross section at no direct pay. Apply and maintain additional asphalt curing membrane or prime coat as directed at no direct pay.

When surfacing with asphalt concrete, place the first lift of surfacing within 30 calendar days.

302.11 WEATHER LIMITATIONS. Do not construct base course when the subgrade or stockpiles are frozen, when raining, when the ambient air temperature is below 35°F, in the case of cement treated bases, or the temperature forecasted by the U.S. Weather Service is to be 25°f or less within the 24-hour period following placement.

302.12 ACCEPTANCE REQUIREMENTS. Soils and aggregates will be sampled for acceptance by the Department in accordance with the Materials Sampling Manual.

For central plant mixing, determine the cement content in accordance with 301.16. For in-place mixing, determine the cement content in

accordance with 302.05. Test the moisture content of the soil cement or cement treated mixtures for conformance to optimum moisture content in accordance with DOTD TR 403.

Test the pulverization of the soil cement or cement treated mixtures in accordance with DOTD TR 431. At least 70 percent shall pass the No. 4 sieve.

Check base course, except asphalt concrete, for acceptance in increments of 1000 linear feet per roadway or 2000 linear feet per shoulder constructed separately. Asphalt concrete acceptance will be in accordance with Section 502.

302.12.1 Density Requirements: Upon completion of compaction operations, determine base course in-place density, except asphalt concrete, in accordance with DOTD TR 401. Determine density requirements for asphalt concrete base course in accordance with Section 502.

The density requirements for Class II base course materials other than asphalt concrete shall be a minimum of 95.0 percent maximum dry density in accordance with DOTD TR 418.

302.12.1.1 Soil Cement and Treated Layer Under Asphalt Concrete: When the density test value for the section falls below 95.0 percent, a payment adjustment will be applied in accordance with Table 302-1 as follows.

Table 302-1
Density Acceptance and Payment Schedule

Density Test Value (percent)	Percent of Contract Unit Price
95.0 & Above	100
94.0 to 94.9	90
93.0 to 93.9	75
Below 93.0	50 or Remove [1]

[1] At the option of the Chief Engineer.

302.12.1.2 Crushed Stone, Recycled Portland Cement Concrete, Blended Calcium Sulfate, and Soil Layer under Asphalt Concrete Base Course: When any test value is less than the required density, continue compaction until obtaining the specified density.

The acceptance requirements for blended calcium sulfate base course shall be the same as stone base course with the following modifications. Upon completion of compaction operations, determine the density in accordance with DOTD TR 401 except that all moisture content

determinations for density calculations shall be conducted by oven drying the material for 24 hours at 140°F. A forced draft type oven capable of maintaining the temperature shall be provided by the contractor for field moisture content determination for density control.

302.12.2 Thickness Requirements: Determine the thickness of the completed base course in accordance with DOTD TR 602.

Do not allow the completed base course to vary from plan thickness in excess of the tolerances in Table 302-2 below. Correct base course thickness deficiencies in excess of these tolerances at no direct pay.

Table 302-2
Base Course Thickness Tolerance

(All Bases Except Asphalt Concrete) Under-Thickness, Inches	(Stabilized & Treated Bases) Over-Thickness, Inches
$^3/_4$	$1^1/_2$

When using crushed stone base or recycled concrete base over soil cement base, the individual base layer tolerances shall be in accordance with Table 302-2, and the total base course under-thickness shall not exceed 1 inch.

Any failing area will be isolated for purposes of correction.

Determine asphalt concrete base thickness in accordance with Section 502.

When using central plant mixing, over-thickness may be waived at no direct pay.

302.12.2.1 Soil Cement, and Treated Layer Under Asphalt Concrete: When not permitting grade adjustments, correct under-thickness deficiencies in excess of tolerance by removing and replacing the full depth of base course in deficient areas with one of the following materials:

1. The same type of base course.
2. Asphalt concrete complying with Section 502.
3. Concrete complying with Section 901.

When permitting grade adjustments, correct thickness deficiencies either by furnishing and placing a supplemental layer of asphalt concrete complying with Section 502 for the full width of base course or by removing and replacing deficient base course. When approved, corrections may be

made by re-stabilizing the existing material in accordance with this section, and the cement content may be reduced from design contents with approval of the District Laboratory Engineer.

Thickness of the supplemental layer of asphalt concrete shall be in accordance with Table 302-3 as follows.

Table 302-3
Supplemental Asphalt Concrete Layer Thickness

Under-Thickness, Inch	In-Place Mixing Over-Thickness, Inches	Minimum Thickness of Supplemental Asphalt Concrete, Inch [1]
1 to 1 $^1/_4$	$1^3/_4$ to 2	$1^1/_4$
$1^1/_2$ to $1^3/_4$	$2^1/_4$ to $2^1/_2$	$1^1/_2$
2 to $2^1/_2$	$2^3/_4$ to 3	2
Over $2^1/_2$	Over 3	Remove and Replace [2]

[1] May be included in the subsequent lift.
[2] At the option of the Department after investigation.

When using reconstruction as the method of correction, the above tolerances shall apply.

302.12.2.2 Crushed Stone, Blended Calcium Sulfate, and Recycled Portland Cement Concrete: When allowing grade adjustments, correct under-thickness in excess of 3/4 inch to plan thickness by furnishing, placing, reworking, shaping, and compacting additional base course material as required. When not allowing grade adjustments, remove the material and replace at no direct pay.

302.12.2.3 Asphalt Concrete Base Course: When not allowing grade adjustments, correct under-thickness in excess of the tolerances given in 502.12 to plan thickness by removing and replacing the full depth of base course. When allowing grade adjustments, correct under-thickness in excess of the tolerances given in 502.12 to plan thickness by placing and compacting an $1^1/_4$-inch thick minimum supplemental layer of asphalt concrete complying with Section 502 at no direct pay.

302.12.3 Width Requirements: Determine the width of the completed base course in accordance with DOTD TR 602. Do not allow roadway base course width to vary from plan width in excess of +6 inches. Do not allow shoulder base course width to vary from plan width in excess of +3 inches. No under-widths are allowed for shoulder or roadway bases. When the base course for both roadway and shoulders are constructed at the same time, the 6-inch tolerance will be applied. Correct base course width

deficiencies in excess of the above tolerances as follows at no expense to the Department:

302.12.3.1 Soil Cement and Asphalt Concrete Base Course

302.12.3.1.1 Over-Width: Over-widths of asphalt concrete and treated base courses mixed in a central plant may be waived at no additional cost to the Department. When not allowing grade adjustments, remove the full depth and width of base course in areas having over-widths in excess of the foregoing tolerances and replace to the plan width with one of the following materials:

1. The same type of base course.
2. Asphalt concrete complying with Section 502.
3. Concrete complying with Section 901.

In lieu of removing and replacing the over-width areas of base course, at the Department's option, any base course less than 12 inches over-width will be allowed to remain in place at an adjusted payment of 90 percent of the contract unit price for the complete section. Remove over-width in excess of 12 inches and replace as indicated above. When approved, corrections may be made by restabilizing the existing material in accordance with this subsection, and the cement content may be reduced from design contents with approval of the District Laboratory Engineer.

When permitting grade adjustments, correct base course width deficiencies by removing and replacing as specified above, or by furnishing and placing a $1^1/_4$-inch thick supplemental layer of asphalt concrete complying with Section 502 on the 1000-foot section for the full width of the base course.

302.12.3.1.2 Under-Width: Correct under-widths of base course in excess of the foregoing tolerances to plan width and thickness by furnishing and placing additional materials; however, the width of widening materials shall be not less than 12 inches. When approved, corrections may be made by restabilizing the existing material in accordance with this section, and the cement content may be reduced from design contents with approval of the District Laboratory Engineer. Materials for widening deficient base course may be asphalt concrete complying with Section 502 or concrete complying with Section 901.

302.12.3.2 Crushed Stone, Blended Calcium Sulfate, and Recycled Portland Cement Concrete: Over-widths will be waived at no additional cost to the Department. Correct under-widths in excess of the

foregoing tolerances to plan widths by furnishing, placing, reworking, shaping, and compacting additional base course material as required.

302.12.4 Grade and Cross-Slope: The finished grade shall be within ±1/2 inch of the established grade. Do not allow the cross-slope to vary by more than ±0.003 foot/foot.

302.12.5 Correction Deficiencies: Correct deficiencies in surface finish, cross-slope, grade, contamination, segregation, soft spots, wet spots, laminations, and other deficiencies at no direct pay. Correct deficiencies by removing and replacing or as directed.

302.13 MEASUREMENT. The quantities of Class II base course for payment will be the design volumes or areas specified in the plans and adjustments thereto. Design quantities are based on the horizontal dimensions and compacted thickness of the completed base course shown on the plans. Design quantities will be adjusted if the engineer makes changes to adjust to field conditions, if plan errors are proven, or if design changes are necessary.

Geotextile fabric used beneath the base course will not be measured for payment.

302.14 PAYMENT. Payment for Class II base course will be made at the contract unit price, adjusted as specified in 302.12 and the following provisions, which includes furnishing and placing required base course materials, portland cement, blended hydraulic cement, water, asphalt curing membrane, and prime coat.

Any payment adjustment in asphalt concrete shall be in accordance with Section 502 and shall apply to the cubic yard total quantity of base course when payment is by cubic yard. For other materials, when making payment adjustments for more than one deficiency, they shall be cumulative.

Payment for geotextile fabric will be included in the contract unit price for base course.

Payment will be made under:

Item No.	Pay Item	Pay Unit
302-01	Class II Base Course	Cubic Yard
302-02	Class II Base Course ____ in Thick	Square Yard

Section 303
In-Place Cement Stabilized and Treated Base Courses

303.01 DESCRIPTION. Scarify, pulverize, blend, shape, and stabilize roadbed material with portland cement, blended hydraulic cement, or portland blast-furnace slag cement in accordance with the lines, grades, thickness, and sections established or shown on the plans.

Cement stabilization and cement treatment is primarily for existing roadbed materials. When specified, furnish and place materials under different pay items to be stabilized or treated in accordance with this section.

In areas that are inaccessible for mixing and compacting in turnouts and crossovers, and in other isolated or irregular areas, portland cement concrete complying with Section 901 or asphalt concrete complying with Section 502 may be used in lieu of the specified base course material with approval. If using asphalt or portland cement concrete, the top half of the base thickness shall be asphalt or portland cement concrete. If used, portland cement concrete shall be a minimum thickness of 6 inches. The remaining thickness shall be the same type and construction as the top layer of embankment, treated layer, or subgrade. Place, consolidate, finish, and cure concrete as directed in accordance with Section 706.

Remove and satisfactorily dispose of existing materials as required to accommodate placement of the portland cement concrete or asphalt concrete at no direct pay. Dispose of excess material in accordance with 202.02.

Submit a dust control plan to address weather, sight clearance, operational procedures, traffic control, and any other project specific concerns. Failure to maintain sight clearance will result in the engineer stopping contractor operations.

The Department will identify dust sensitive areas in the plans. In these specific areas, the dust control plan must also include environmental requirements.

Quality assurance requirements shall be as specified in the latest edition of the Department's publication titled *Application of Quality Assurance Specifications for Embankment and Base Course.*

303.01.1 Cement Stabilization: Cement stabilization is primarily used for existing roadbed materials, typically 8.5 inches thick, unless specified otherwise. The design compressive strength criteria for cement stabilization shall be 300 psi as determined in accordance with DOTD

TR 432, Method B or C.

303.01.2 Cement Treatment: Cement treatment is primarily used for existing roadbed materials typically 12 inches thick, unless specified otherwise. The design compressive strength criteria for cement treatment shall be 150 psi as determined in accordance with DOTD TR 432, Method B or C.

303.02 MATERIALS. Materials shall comply with the following sections or subsections:

Portland Cement	1001.01
Blended Hydraulic Cement	1001.02
Ground Granulated Blast-Furnace Slag Cement	1001.05
Emulsified Asphalt	1002
Water	1018.01

Portland cement shall be Type I or II. Blended hydraulic cement shall be Type IP. Ground granulated blast-furnace slag cement shall be Type IS. The quantity of cement used shall be supported by proof of delivery.

Portland blast-furnace slag cement shall contain a maximum of 50 percent ground granulated blast-furnace slag by weight. Pre-blending of Types I or II portland cement and ground granulated blast-furnace slag will be allowed if blended at an approved blending facility and mixed thoroughly to ensure a uniform blend. The ground granulated blast-furnace slag used in pre-blending shall be from the Approved Materials List and meet the requirements of 1001.05.

Furnish soils or soil-aggregate combinations for cement stabilization or treatment in accordance with this section that comply with the requirements of 302.02.1. If an A-4 or A-6 Soil Group material is used for cement treatment, it shall meet the durability requirements of DOTD TR 432.

303.02.1 Determination of Cement Rate

303.02.1.1 Predetermined (Plan Specified): For portland cement, mix the roadbed material with the rate of cement by volume as shown on the plans.

303.02.1.2 Non-Predetermined: If the percent cement has not been predetermined, the District Laboratory will determine the percent of cement by volume in accordance with DOTD TR 432 from materials sampled in-place on the project. The Department will take samples for percent cement determination from isolated random areas selected by the

project engineer, prepared for sampling by the contractor. Thoroughly pulverize and mix the sampling area to the satisfaction of the project engineer. Resurface sampling areas as directed after samples are taken and maintain to the satisfaction of the project engineer. Payment for resurfacing will be made under the appropriate asphalt concrete roadway or maintenance aggregate items.

Depending on materials to be stabilized, normal testing time to determine the required cement content may require up to 21 calendar days.

303.02.1.3 Contractor Selected Cement Type: If selecting Type IP or IS as the cementitious material, determine the rate of blended cement prior to mixing using TR 432, Method B or C, whichever applies, using the design compressive strength criteria listed for treatment or stabilization. In addition, determine the durability of the base course mixture using Type IP or IS in accordance with DOTD TR 432 with the rate of cementitious material determined from Method B or C. Perform the laboratory testing specified above for Types IP or IS cement at no expense to the Department. The laboratory used must be approved by the Materials Engineer Administrator.

Take samples, in the presence of the engineer, by methods described in 303.02.1.2 above. Payment for resurfacing and subsequent maintenance to the satisfaction of the engineer shall be at no expense to the Department.

During sampling operations, obtain sufficient material to provide the District laboratory with approximately 200 pounds of the base material to be treated for verification testing. Take samples for verification from randomly spaced locations, determined by the engineer, throughout the project length. The engineer will take immediate possession of the verification samples. Also provide approximately 10 pounds of the selected cementitious material to the District laboratory. Provide materials for verification testing at no cost to the Department.

Submit all design data used to determine the recommended cement rate to the District Laboratory Engineer for approval. Prior to approval of the design, the District Laboratory will perform verification testing. Verification testing by the District Laboratory will consist of molding, curing, and testing a minimum of three specimens in accordance with TR 432, at the percentage of cementitious material and at the optimum moisture determined by the contractor's laboratory. The recommended cement rate will be considered verified if test results indicate that the minimum strength and durability criteria as specified have been met and that the optimum moisture are within 2 percent of that submitted by the

contractor. Normal testing time for verification testing may require up to 21 calendar days. Do not begin construction operations until the design is approved.

303.03 EQUIPMENT. Furnish and maintain the equipment necessary to produce a finished base course meeting specification requirements. Equipment shall be approved prior to use. Pulverize using an approved in-place mixer.

Use an in-place mixer equipped with a spray bar that can apply water across the full width of the cut and be adjusted to prevent overlap of water on adjacent paths.

Distribute cement from transports using spreader bars approved by the engineer. The engineer may require the use of a cement spreader capable of width adjustment and equipped with a calibrated spreader box if a uniform cement spread cannot be achieved. The Department may verify the distribution of dry additives using DOTD TR 436, Method A. Perform initial compaction using a conventional sheepsfoot-type roller or a self-propelled tamping foot compactor-type roller. The spikes shall be sufficient in size and number to provide uniform compaction for the full width and depth of the base course. Perform finish rolling with a pneumatic tire roller.

303.04 PREPARATION OF ROADBED. Unless otherwise designated on the plans, remove all existing asphalt concrete surfacing except the bottom 1 inch in accordance with Section 509 prior to cement stabilization. During these removal and replacement operations, maintain the areas used by public traffic in a safe condition in accordance with 105.15. Scarify and pulverize materials to be stabilized for the full width and depth of the base course. Pulverize the remaining existing asphalt surfacing and uniformly mix it with materials below the surfacing.

Do not prepare roadbed in excess of 2 miles in advance of roadway base course stabilization or treatment. When approved by the project engineer, the 2-mile limit may be extended. However, when the 2-mile limit is extended, the lag between preparation of roadbed and base stabilization or treatment shall not exceed 5 working days. When stabilizing or treating shoulders separately from roadway base, the 2-mile limitation will not apply to shoulders.

Blend the scarified and pulverized material to achieve uniform blending. When existing material is not uniform across the full width to be stabilized, blend the material to form a uniform blend for the full width and depth of the

base course.

Scarify and pulverize the roadbed to at least 60 percent passing the No. 4 sieve in accordance with DOTD TR 431 prior to mixing with cement. Identify and remove existing concrete or asphalt concrete patches encountered during roadbed preparation operations. Remove patches and disposed of in accordance with 202.02.

After the roadbed has been prepared as specified above, shape the roadbed to the required section and uniformly compact the roadbed material to at least 93.0 percent of maximum dry density prior to mixing with cement. Determine maximum dry density in accordance with DOTD TR 415 or TR 418. Determine in-place density in accordance with DOTD TR 401. Correct areas which cannot be compacted to 93.0 percent of maximum dry density at no direct pay.

303.05 MIXING. The method of spread shall be such that the amount of cement used can be readily determined when tested in accordance with DOTD TR 436. Uniformly spread and mix cement with the material. Make a minimum of two passes with the mixer (stabilizer). Shape the mixture to the required section.

Add water as needed by means of the mixer and uniformly incorporate the mixture in amounts required to attain optimum moisture for the mixture. During the mixing process, add water only through the spray bar of the in-place mixer, adjusted to provide uniform coverage across the completed width of the roadway for the full depth of the base. Do not allow wet streaks or spots.

Determine optimum moisture of the mixture in accordance with DOTD TR 415 or TR 418. Do not allow the percentage of moisture, determined in accordance with DOTD TR 403, in the mixture by dry weight to vary from optimum moisture by more than ±2 percent at the time of compaction.

303.06 COMPACTING AND FINISHING. Uniformly compact the mixture immediately upon completion of mixing to the specified depth and width shown in the plans. Complete initial compaction with an approved sheepsfoot-type roller or a self-propelled tamping foot compactor-type roller in such a manner that no internal laminations occur in the completed base course. Complete final compaction with a pneumatic tire roller.

Keep the surface uniformly moist during compacting and final finishing. Continue compaction until each lift of base course has met the requirements of 303.11.

At places inaccessible to rollers, such as edges adjacent to curb and gutter sections, compact the mixture using devices that will obtain the specified density without damaging adjacent structures.

Begin mixing operations within one hour of placement. Complete compaction and finishing operations within three hours after initial mixing of cement with base course materials. Upon expiration of the three-hour period after initial mixing, only intermediate finishing (tight blading) of the base course surface will be allowed. Dispose of excess bladed material. Do not drift bladed material along the base. Use stabilized or treated material in the base course except that small amount necessary for tight blading. Excessive blading, exceeding 10 percent of the base thickness, to achieve plan depth will not be allowed. Complete operations, including tight blading, within 24 hours of mixing. The finished base course shall have a smooth, uniform, closely-knit surface, free from ridges, waves, laminations, or loose material. Do not spread cement within two hours before sunset, unless otherwise approved by the project engineer.

303.07 QUALITY CONTROL. Control the preparation of roadbed, selection and placement of materials, cement spread, mixing, compaction, moisture content, density, thickness, width, surface finish, grade, and cross slope so that the completed base course is uniform and conforms to plan dimensions and other acceptance requirements as provided herein. Control operations so that contamination, segregation, soft spots, wet spots, laminations, and other deficiencies are prevented. Take such tests as necessary to adequately control the work.

303.08 PROTECTION AND CURING. Upon completion of final finishing, immediately protect the base against rapid drying by applying an asphalt curing membrane in accordance with Section 506. Maintain complete coverage of curing membrane from the initial application until the placement of the next course. When allowing traffic, including construction equipment, on the base course, place at least the first lift of surfacing within 30 calendar days unless otherwise directed.

303.09 MAINTENANCE. Protect the completed base course from damage due to either public traffic or the contractor's operations, and satisfactorily maintain the completed base course including asphalt curing membrane. Repair damaged base course at no direct pay. When requiring patching of the base course, in addition to removing damaged or unsound

base course, remove a sufficient width and depth of base course to ensure satisfactory placement of patching material. Submit the proposed type of patching materials to the engineer for review and comment before use. Complete patching or other repairs of the base course to restore a uniform surface, conforming to the requirements of the material used, prior to surfacing operations.

Do not allow public traffic or construction traffic on the completed base course for a 72-hour curing period. If conditions permit, route both public traffic and construction traffic off the completed base course onto shoulders or other suitable areas during the 72-hour curing period. Traffic may be permitted on the base course during the curing period, if conditions warrant and if approved by the engineer.

When permitting traffic to use the completed base prior to the construction of the surface course, further protect the base by additional applications of asphalt curing membrane in accordance with 302.10 as directed at no direct pay. Prior to surface course construction, clean the base course and apply and maintain additional asphalt curing membrane as directed at no direct pay.

Correct any weak spots that develop. Keep the base course free from deficiencies and true to grade and cross section at no direct pay. When the surfacing is asphalt concrete, place the first lift of surfacing within 30 calendar days.

303.10 WEATHER LIMITATIONS. Do not mix when the base course material is frozen, when raining, when the ambient air temperature is below 35°F, or the temperature forecasted by the U.S. Weather Service is to be 25°F or less within the 24-hour period following placement.

303.11 ACCEPTANCE REQUIREMENTS. The department will test soils and aggregates from samples taken after preparation of the roadbed.

Test cement spread rate in accordance with DOTD TR 436. Test the moisture content of the cement stabilized or treated mixtures for compliance with optimum moisture content in accordance with DOTD TR 403 at placement at least twice per day.

Test the pulverization of the prepared roadbed in accordance with DOTD TR 431, and must be at least 60 percent passing the No. 4 sieve.

Check the completed base course for determining acceptance in increments of 1000 linear feet per roadway or 2000 linear feet per shoulder constructed separately.

303.11.1 Density Requirements: Upon completion of compaction operations, determine in-place density in accordance with DOTD TR 401.

The density requirement as based on DOTD TR 415 or TR 418 shall be 95.0 percent of maximum dry density.

When the density test value for the section is below 95.0 percent, apply a payment adjustment in accordance with Table 303-1.

Table 303-1
Density Acceptance and Payment Schedule

Density Test Value (percent)	Percent of Contract Unit Price
95.0 & Above	100
93.0 to 94.9	90
90.0 to 92.9	75
Below 90.0	50 or Remove [1]

[1] At the option of the Chief Engineer.

303.11.2 Thickness Requirements: Determine the thickness of the completed base course in accordance with DOTD TR 602.

The completed base course shall not vary from plan thickness in excess of the tolerances in Table 303-2 as follows. Base course thickness deficiencies in excess of these tolerances shall be corrected as specified herein at no direct pay.

Table 303-2
Base Course Thickness Tolerance

Under-Thickness, Inches	Over-Thickness, Inches
$^3/_4$	$1^1/_2$

Isolate any failing area for purposes of correction. Correct base course thickness deficiencies in excess of the foregoing tolerances as follows.

When not permitting grade adjustments, correct thickness deficiencies by restabilizing or retreating with cement or removing and replacing the full depth of base course in deficient areas with one of the following materials:

1. Cement stabilized or treated base course.
2. Asphalt concrete complying with Section 502.
3. Concrete complying with Section 901.

When permitting grade adjustments, deficiencies may be corrected by furnishing and placing a supplemental layer of asphalt concrete complying with Section 502 for the full width of base course in lieu of removing and replacing deficient base course. When approved, corrections may be made

by restabilizing or retreating the existing material in accordance with this section and the cement content may be reduced from design contents with approval of the District Laboratory Engineer. Thickness of the supplemental layer of asphalt concrete shall be in accordance with Table 303-3 as follows.

Table 303-3
Supplemental Asphalt Concrete Layer Thickness

Under-Thickness, Inch	Over-Thickness, Inch	Minimum Thickness of Supplemental Asphalt Concrete [1], Inch
1 to $1^1/_2$	$1^3/_4$ to 2	$1^1/_4$
$1^3/_4$ to 2	$2^1/_4$ to $2^1/_2$	$1^1/_2$
$2^1/_4$ to $2^1/_2$	$2^3/_4$ to 3	2
Over $2^1/_2$	Over 3	Remove and Replace [2]

[1] May be placed with subsequent lift of asphalt concrete.
[2] At the option of the Department after investigation.

303.11.3 Width Requirements: Determine the width of the completed base course in accordance with DOTD TR 602. Do not exceed roadway base course plan width by more than 6 inches. Do not exceed shoulder base course plan width by more than 3 inches. Under-widths of shoulder or roadway bases are not allowed. When the base course for roadway and shoulders are constructed at the same time, the 6-inch width tolerance will be applied. Correct base course width deficiencies in excess of foregoing tolerances as follows at no expense to the Department.

303.11.3.1 Over-Width: When not permitting grade adjustments, the full depth and width of base course in isolated areas with over-widths in excess of the foregoing tolerances shall be re-stabilized or retreated full width with cement, and the cement content may be reduced from design contents with approval of the District Laboratory Engineer. Otherwise, remove and replace to the plan width with asphalt concrete complying with Section 502 or concrete complying with Section 901.

In lieu of removing and replacing over-width base course, allow areas of the deficient base course to remain in place at a payment adjustment of 90 percent of the contract unit price for the entire lot.

When permitting grade adjustments, correct base course width deficiencies by removing and replacing as specified above, or by furnishing and placing a $1^1/_4$-inch thick supplemental layer of asphalt concrete complying with Section 502 for the full width of the roadway.

303.11.3.2 Under-Width: Correct under-widths of base course in excess of the foregoing tolerances to plan width by restabilizing or retreatment the full width with cement or by furnishing and placing additional materials; however, do not allow the width of the widening materials to be less than 12 inches. Materials used for widening the deficient base course shall be the same as specified for over-width correction in 303.11.3.1.

303.11.4 Grade and Cross-Slope: The finished grade shall be within ±1/2 inch of the established grade. Do not allow the cross slope to vary by more than ±0.003 foot/foot.

303.11.5 Correction of Deficiencies: Correct deficiencies in surface finish, grade, contamination, segregation, soft spots, wet spots, laminations, and other deficiencies at no direct pay. Correct deficiencies by removing and replacing or as directed.

303.12 MEASUREMENT. The quantity of in-place cement stabilized or treated base course for payment will be the design areas as specified in the plans and adjustments thereto. The design quantity is based on the horizontal dimensions of the completed base course shown on the plans. The design quantity will be adjusted if the engineer makes changes to adjust to field conditions, if design errors are proven, or if design changes are necessary.

Removal of existing patches will be measured by the square yard. This measurement will be determined and documented jointly by the contractor and project engineer. If including items in the contract, measurement will be in accordance with 109.04.

303.13 PAYMENT. Payment for in-place cement stabilized or in-place treated base course will be made at the contract unit prices per square yard, adjusted as specified in 303.11 and the following provisions, which include furnishing required portland cement, water, and asphalt curing membrane, and performing necessary roadbed preparation. Payment for removing all existing asphalt concrete surfacing will be made under section 509 except for the bottom 1 inch. No direct payment will be made for removal and disposal of the remaining bottom 1 inch of asphalt surfacing or maintaining the areas in safe condition for traffic.

If the actual required percent of cement differs from that required by the contract documents, payment will be increased or decreased based on the difference in required quantity of cement at the price of cement shown on paid invoices (total of all charges). The contractor shall provide copies of

paid invoices for this determination. If the contract documents do not specify a percent cement, 8 percent cement will be used for stabilized base course and 6 percent will be used for treated base courses for bid purposes.

Removal of existing patches will be paid at the contract unit price per square yard or if no item is provided, in accordance with 109.04. However, no payment will be made unless the contractor identifies the patches and participates in the measurement and documentation.

Payment adjustments will be applied for specification deviations of asphalt materials in accordance with Section 1002 based on the invoice price per gallon. The Materials and Testing Section will provide the payment adjustment percentage for properties of asphalt materials.

Item No.	Pay Item	Pay Unit
303-01	In-Place Cement Stabilized Base Course ___in Thick	Square Yard
303-02	Removal of Existing Patches	Square Yard
303-03	In-Place Cement Treated Base Course ___in Thick	Square Yard

Section 304
Lime Treatment

304.01 DESCRIPTION. Construct one or more courses of a mixture of lime, soil, or soil-aggregate, and water in accordance with these specifications and Table 304-2, in conformity with the lines, grades, thickness and sections shown on the plans.

Lime treatment will be designated as Type B, C, D, or E. Use Type B for base or subbase. Use Type C for conditioning for cement treatment or stabilization. Use Type D for working table treatment under or within an embankment. Use Type E for conditioning and drying of subgrades under a base course.

304.02 MATERIALS. Materials shall comply with the following sections and subsections:

Emulsified Asphalt	1002
Water	1018.01
Lime	1018.02

Quality assurance requirements shall be as specified in the latest edition of the Department's publication titled *Application of Quality Assurance Specifications for Embankment and Base Course.*

Submit a dust control plan to address weather, sight clearance, operational procedures, traffic control, and any other project specific concerns. Failure to maintain sight clearance will result in the engineer stopping contractor operations.

The Department will identify dust sensitive areas in the plans. In these specific areas, the dust control plan must also include environmental requirements. In order to meet air quality standards, the contractor may be required to use central plant mixing, lime-slurry, or granular lime in dust sensitive areas at no direct pay.

304.03 EQUIPMENT. Furnish and maintain equipment necessary to produce a finished product meeting specification requirements. Use an approved in-place mixer meeting the requirements of 303.03 for Type B and C treatments. Use an approved in-place mixer meeting the requirements of 303.03 for Types D and E treatments unless the engineer allows other equipment.

304.04 GENERAL CONSTRUCTION REQUIREMENTS. Protect dry lime from moisture prior to use. Add water as needed during mixing and remixing operations, during the curing period, and to keep the cured material uniformly moist until covered.

When applying granular quicklime in dry form, take precautions to prevent injury to persons, livestock, and plants. Immediately collect quicklime spilled or deposited outside areas designated for treatment and bury or satisfactorily slake.

Do not apply lime on a frozen foundation or when the ambient air temperature is below 35°F.

304.04.1 Type B Treatment: Incorporate lime in the following sequence: Spread the lime; initially mix; water; seal and mellow for at least 48 hours; and then mix until pulverization requirements are met; compact; finish; and maintain in accordance with 304.09. Determine the percent of lime for Type B treatment in accordance with DOTD TR 416. After lime treatment, the treated soil shall have a maximum Liquid Limit of 40 and a maximum PI of 10.

304.04.2 Type C Treatment: Incorporate lime in the following sequence: Spread the lime; initially mix; water; seal and mellow for a minimum of 48 hours; then mix until pulverization requirements are met; compact; finish; and maintain. The percent of lime for Type C treatment will be as required by the plans or as directed.

304.04.3 Type D Treatment: Spread and mix one increment of lime with materials to be treated, water as required, and compact to the satisfaction of the engineer. The percent of lime for Type D treatment will be as required by the plans or as directed.

304.04.4 Type E Treatment: Spread and mix one increment of lime with materials to be treated and compacted, and finish in accordance with Section 203. Unless specified, determine the percent of lime for Type E treatment in accordance with DOTD TR 416.

304.05 SPREADING AND MIXING. Incorporate the specified percentage of lime. When not specified, the District Laboratory will determine the required percentage of lime in accordance with DOTD TR 416.

Use a unit weight of 35 pounds per cubic foot to compute the required application rate of hydrated lime or granular quicklime regardless of the actual unit weight of the lime used.

Furnish lime in bags or bulk and distribute in powder or granular form or as slurry in the required proportion. Prevent dry lime from blowing by adding water or by other suitable means.

Uniformly spread lime and mix with the soil to the width and depth shown on the plans or as directed. The Department will determine lime spread rate in accordance with DOTD TR 436. Discontinue any procedure that results in excessive loss or displacement of lime.

Process areas on the same day that lime application is made. Reject any lime not processed within 6 hours and lime lost or damaged before incorporation due to rain, wind, or other cause, and deduct from measured quantities. Replace all rejected lime. Payment will not be made more than once for lime treatment of a section of roadway.

304.05.1 Type B Mixing: After the 48-hour mellowing period, keep the lime treated mixture moist and manipulate with an in-place mixer until the pulverization requirements of 304.06 have been met.

304.05.2 Type C Mixing: After the 48-hour mellowing period, thoroughly manipulate the lime treated mixture with an in-place mixer to the satisfaction of the engineer. The mixture shall meet the pulverization requirements of 304.06 prior to subsequent stabilization or treatment with portland cement.

304.05.3 Types D and E: Mix with an in-place mixer unless the engineer approves other equipment.

304.06 PULVERIZATION. For Types B and C treatment, the pulverized mixture, when tested in accordance with DOTD TR 431, shall meet the gradation requirements in Table 304-1.

Table 304-1
Gradation Requirements for Types B & C Lime Treatment

U. S. Sieve, Inches	Percent Passing By Weight
$^3/_4$	95
No. 4	50

Meet pulverization requirements for Type B and C treatments prior to final compaction and finishing.

304.07 COMPACTING AND FINISHING.

304.07.1 Type B: After meeting the pulverization requirement, uniformly compact the mixture to at least 95.0 percent of maximum dry density. Determine the maximum dry density in accordance with DOTD TR 415 or TR 418 and in-place density in accordance with DOTD TR 401. Complete compaction and finishing operations within 6 hours after meeting pulverization requirements. The Department will perform one density test per 1000 linear feet of roadway (or 2000 linear feet) of shoulder constructed separately in accordance with DOTD TR 401.

At places inaccessible to rollers, such as edges adjacent to curb and gutter sections, compact the mixture using devices that will obtain uniform compaction to required density without damage to adjacent structures. Reconstruct any section not meeting the required density in accordance with these specifications at no direct pay. Reconstruction shall include the addition of the specified amount of lime.

The final finish shall meet grade and cross-slope requirements and shall have a smooth, uniform, closely-knit surface, free from ridges, waves, loose material, or laitance.

304.07.2 Type C: Shape and uniformly compact Type C lime conditioned materials to the required sections. Uniformly compact the mixture to at least 93.0 percent of maximum dry density. Determine the maximum dry density in accordance with DOTD TR 415 or TR 418 and in-place density in accordance with DOTD TR 401. When conditions, such as a yielding subgrade, make this impractical or detrimental, establish an optimum rolling pattern to the satisfaction of the engineer.

304.07.3 Type D: Uniformly compact and finish Type D lime treated materials to the satisfaction of the engineer. Make reasonable efforts to conform to the compaction requirements of 304.07.1. When conditions, such as a yielding subgrade, make this impractical or detrimental, establish an optimum rolling pattern to the satisfaction of the engineer.

304.07.4 Type E: Compact and finish Type E lime treated materials in accordance with Section 203.

When traffic conditions warrant, and an adequate rolling pattern has been established that demonstrates density has been achieved, the engineer may reduce density frequency testing requirements to expedite construction. A change in subgrade materials will require testing at the original frequency until a new rolling pattern is established.

304.08 QUALITY CONTROL. Construction methods shall prevent contamination, segregation, soft spots, wet spots, laminations, and other deficiencies. Perform such tests as necessary to adequately control the work. Construct a completed course that is uniform and conforms to the acceptance requirements.

304.09 PROTECTION, CURING, AND MAINTENANCE. Maintain these treatments to prevent damage to the lime treated layer as directed.

For Type B Treatment, protect the material against rapid drying for 72 hours by applying an asphalt curing membrane, complying with Section 506, after finishing operations have been completed. Place the application immediately following smooth rolling and maintain it adequately during the curing period. Maintain Type B Lime Treatment in accordance with 303.09.

304.10 DIMENSIONAL TOLERANCES (TYPE B TREATMENT).

304.10.1 General: The Department will check thickness and width of completed lime treated courses for acceptance in accordance with DOTD TR 602.

Delineate areas not meeting tolerances specified herein and correct to plan dimensions by scarifying, adding lime, remixing, and recompacting deficient areas at no direct pay.

304.10.2 Thickness Requirements: Do not allow under-thickness to exceed 3/4 inch and over-thickness to exceed 1 inch.

304.10.3 Width Requirements: Do not allow roadway base course width to vary from plan width in excess of +6 inches. Shoulder base course width shall not vary from plan width in excess of +3 inches. No under-widths are allowed for shoulder or roadway bases. When the base course for roadway and shoulders are constructed at the same time, the 6-inch width tolerance will be applied. Correct base course width deficiencies in excess of foregoing tolerances at no expense to the Department.

304.11 MEASUREMENT. Lime will be measured by the ton. When furnishing lime in bags, the number of bags used and the weight per bag will be used for measurement. When furnishing lime in bulk, the contractor shall furnish certified weights for each transport load.

The quantities of lime treatment for payment will be the design areas as specified on the plans and adjustments thereto. Design quantities are based on the horizontal dimensions of the completed lime treatment shown on the

plans. Design quantities will be adjusted if the engineer makes changes to adjust to field conditions, design errors are proven, or design changes are necessary.

Water and asphalt curing materials will not be measured for payment.

304.12 PAYMENT. Payment for lime will be made at the contract unit price per ton. If using quicklime in a slurry, payment will be made at the unit price for hydrated lime after converting the quicklime to the equivalent weight of hydrated lime by multiplying the weight of quicklime by 1.32 and then multiplying that product by the purity of the lime.

Payment for lime treatment will be made at the contract unit prices per square yard. Type B lime treatment will be adjusted as specified in Sections 506 and 1002 for specification deviations of asphalt curing membrane. The Materials and Testing Section will provide the payment adjustment percentage for properties of asphalt materials.

Payment will be made under:

Item No.	Pay Item	Pay Unit
304-01	Lime	Ton
304-02	Lime Treatment (Type B) ___ in Thick	Square Yard
304-03	Lime Treatment (Type C) ___ in Thick	Square Yard
304-04	Lime Treatment (Type D) ___ in Thick	Square Yard
304-05	Lime Treatment (Type E) ___ in Thick	Square Yard

Table 304-2
Types of Lime Treatment

B	Base or Subbase	1. One application of lime 2. Initial mixing 3. 48-hour mellowing or aging period 4. Pulverization [1] 5. Density control 6. Minimum thickness and width 7. 72-hour cure with asphalt curing membrane
C	Conditioning for Cement Treatment or Stabilization	1. One application of lime 2. Initial mixing 3. 48-hour mellowing or aging period 4. Pulverization [1] 5. Density control 6. No cure required
D	Working Table	1. One application of lime 2. Mixing [2] 3. Compact to engineer's satisfaction 4. No cure required
E	Conditioning and Drying (Subgrades Under a Base Course)	1. One application of lime per lift 2. Mixing [2] 3. Embankment construction requirements including density 4. No cure required

[1] In-place mixer shall be required.

[2] In-Place mixer shall be required unless the engineer approves other equipment.

Section 305
Subgrade Layer

305.01 DESCRIPTION. Subgrade layer is primarily used for new roadway construction.

Treat subgrade soil materials with portland cement, portland-pozzolan blended hydraulic cement, or a combination of portland cement and lime, or construct a subgrade layer of stone, recycled portland cement concrete, blended calcium sulfate, or asphalt concrete in accordance with plan details or as directed. When requiring traffic to be placed on the completed, unsurfaced subgrade layer, or when the subgrade layer falls below natural ground, blended calcium sulfate will not be allowed. When not specified, the subgrade layer may be composed of any of the types of materials listed above, at the option of the contractor. Use the same subgrade layer throughout the project unless otherwise approved by the project engineer. The plans may limit the types of subgrade layer allowed.

These specifications set forth the minimum requirements for construction of the subgrade layer; however, construct a subgrade layer that will provide adequate support for construction equipment and processes.

Quality assurance requirements shall be as specified in the latest edition of the Department's publication titled *Application of Quality Assurance Specifications for Embankment and Base Course.*

Submit a dust control plan to address weather, sight clearance, operational procedures, traffic control, and any other project specific concerns. Failure to maintain sight clearance will result in the engineer stopping contractor operations.

The Department will identify the dust-sensitive areas on the plans. In order to meet air quality standards, the contractor may be required to use central plant mixing of cement or cement and lime treated mixtures in dust sensitive areas at no direct pay.

305.02 MATERIALS. Materials shall comply with the following sections and subsections:

Geotextile Fabric	203.11 & 1019
Asphalt Concrete	502
Portland Cement	1001.01
Blended Hydraulic Cement	1001.02
Emulsified Asphalt	1002
Stone	1003.01 & 1003.04.1

Recycled Portland Cement Concrete	1003.01 & 1003.04.1
Blended Calcium Sulfate	1003.01 & 1003.04.2
Water	1018.01
Lime	1018.02

Sample blended calcium sulfate in accordance with the requirements for stone in Section 302 of the *Materials Sampling Manual*.

Asphalt concrete shall meet the requirements of Section 502 base course.

When the contractor elects to use blended hydraulic cement, the rate of cement shall be determined in accordance with 303.02.1.3 at no expense to the Department. The design compressive strength criteria for cement treated subgrade layer shall be 100 psi as determined in accordance with DOTD TR 432, Method B or C.

305.03 EQUIPMENT. Furnish and maintain equipment necessary to produce a finished product meeting specification requirements. The equipment must be approved prior to use.

305.04 CONSTRUCTION REQUIREMENTS.

305.04.1 Treated Subgrade Layer: Materials to be treated shall be existing or placed under other pay items.

305.04.1.1 Subgrade Soils: Subgrade soils to be treated shall be no more than 79 percent sand or 69 percent silt, when tested in accordance with DOTD TR 407, and shall have a Plasticity Index (PI) not exceeding 35 when tested in accordance with DOTD TR 428. Do not blend to adjust the percents sand or silt for subgrade layers for Class I base course. Do not blend or treat to reduce PI.

305.04.1.2 Treatment: Treat subgrade soils by mixing with portland cement or a combination of portland cement and lime conditioning, and compact, finish, and cure. In-place treatment with portland cement shall be in accordance with Section 303. When central plant mixing is used, conform to Section 301. Treatment with lime shall be in accordance with Section 304 for Type C treatment. Use the minimum quantities of portland cement and lime in accordance with Table 305-1.

Table 305-1
Minimum Quantities of Portland Cement and Lime

P. I.	Percent by Volume
0 – 15	6% cement
16 – 25	6% lime and 6% cement
26 – 35	9% lime and 6% cement

The engineer has the option of increasing or decreasing the percentages of cement and lime based on field conditions. The contract unit price for Subgrade Layer will be adjusted for the actual percentages of cement and lime required.

305.04.1.3 Pulverization: After treatment the pulverized mixture shall conform to the gradation requirements in Table 305-2 when tested in accordance with DOTD TR 431.

Table 305-2
Gradation Requirements for Treated Subgrade Layer

U. S. Sieve, Inches	Percent Passing By Weight
$^3/_4$	95
No. 4	50

305.04.2 Aggregate Surface Layer: Unless otherwise specified, furnish stone or recycled portland cement concrete. Place the aggregate subgrade layer and compact, finish, and protect in accordance with Section 302.

If using an aggregate subgrade layer, furnish and place a Class D geotextile fabric to separate the aggregate subgrade layer from untreated soil.

305.04.3 Asphalt Concrete Subgrade Layer: Construct asphalt concrete subgrade layer in accordance with Section 502.

305.04.4 Blended Calcium Sulfate: Blend calcium sulfate with an approved aggregate prior to placement. Uniformly mix and sample the blended calcium sulfate material from dedicated stockpiles.

Add water or use other suitable means to prevent dust during the transport and placement of dry blended calcium sulfate.

Place, spread, and compact blended calcium sulfate to produce layers not exceeding 12 inches compacted thickness. Place each layer for the full

width, bring to optimum moisture content, and compact to at least 95 percent of maximum dry density before the next layer is placed. Determine optimum moisture and maximum dry density in accordance with DOTD TR 415 or TR 418 Method G, modified to include a maximum drying temperature of 140°F. Provide a forced draft type oven capable of maintaining the temperature for field moisture content determination for density control.

Do not place blended calcium sulfate within 10 feet of metal pipe.

Protect and cure blended calcium sulfate in accordance with 301.12.2.

305.05 MEASUREMENT. The quantities of subgrade layer for payment will be the design areas as specified in the plans and adjustments thereto. Design quantities will be measured in square yards based on the horizontal dimensions of the completed subgrade layer shown on the plans. Design quantities will be adjusted if the engineer makes changes to adjust to field conditions, plan errors are proven, or design changes are necessary.

DOTD TR 602 measurements for width and thickness will not be made, but the width and thickness will be checked by the engineer during construction.

When using aggregate, blended calcium sulfate, asphalt concrete, or central mixing, the removal of existing soil materials from the subgrade will not be measured for payment.

Geotextile fabric used beneath the subgrade layer will not be measured for payment.

305.06 PAYMENT. Payment for subgrade layer will be made at the contract unit price per square yard which includes lime, lime treatment, cement, cement treatment, water, stone, recycled portland cement concrete, blended calcium sulfate, asphalt concrete, geotextile fabric, and asphalt curing membrane or prime coat, subject to the payment adjustment provisions of Section 1002 for specification deviations of asphalt materials and 303.11.1 for density deficiencies of cement treated materials. Adjustments in pay for increase or decrease in the percent cement ordered by the engineer will be in accordance with 303.13. Adjustments in pay for increase or decrease in percent lime ordered by the engineer will be based on the price of lime shown on paid invoices (total of all charges). The Materials and Testing Section will provide the payment adjustment percentage for properties of asphalt materials.

Payment will be made under:

Item No.	Pay Item	Pay Unit
305-01	Subgrade Layer ___ in Thick	Square Yard

Section 306
Scarifying and Compacting Roadbed

306.01 DESCRIPTION. Scarify, shape, and compact existing roadbed to form a subbase or base course in accordance with these specifications, and in conformity with the lines, grades, depth, and cross-section shown on the plans or established.

Quality assurance requirements shall be as specified in the latest edition of the Department's publication titled *Application for Quality Assurance Specifications for Embankment and Base Course.*

306.02 CONSTRUCTION REQUIREMENTS. Scarify existing materials for the full width of roadbed and a minimum depth of 6 inches, shape to the required section, and uniformly compact to at least 95 percent of maximum dry density for subbase, and 98 percent for base, as determined in accordance with DOTD TR 401 and TR 415 or TR 418. Assure that the scarified, shaped, and compacted roadbed has a smooth, uniform, closely-knit surface, free from ridges, waves, depressions, or loose material. Do not scarify the roadbed in excess of one mile in advance of compacting the roadbed. Prime the compacted roadbed in accordance with Section 505.

306.03 MAINTENANCE OF COMPACTED ROADBED. Protect the compacted roadbed from damage due to either public traffic or construction operations, and maintain the roadbed in satisfactory condition at all times, including the asphalt prime coat. Repair all damage immediately at no direct pay.

306.04 MEASUREMENT. The quantities of scarifying and compacting roadbed for payment will be the design lengths or areas as specified in the plans and adjustments thereto. Design quantities are based on the horizontal dimensions of the roadbed shown on the plans. Design quantities will be adjusted when the engineer makes changes to adjust to field conditions, if plan errors are proven, or when design changes are necessary.

306.05 PAYMENT. Payment for scarifying and compacting roadbed will be at the contract unit price, which includes asphalt prime coat.

Payment adjustments will be applied for specification deviations of asphalt prime coat materials in accordance with Sections 505 and 1002. The Materials and Testing Section will provide the payment adjustment percentage for properties of asphalt materials.

Payment will be made under:

Item No.	Pay Item	Pay Unit
306-01	Scarifying and Compacting Roadbed ___ in Thick	Mile
306-02	Scarifying and Compacting Roadbed ___ in Thick	Square Yard

Section 307
Permeable Bases

307.01 DESCRIPTION. Construct a permeable asphalt base or permeable concrete base on a prepared subgrade in accordance with these specifications and in conformity with the lines, grades, thicknesses, and typical sections shown on the plans or as directed.

When including a permeable base in the contract, furnish either a permeable asphalt base or a permeable concrete base unless otherwise specified. Use the same type of base throughout the project unless otherwise specified on the plans or approved in writing.

The permeable asphalt base shall consist of a mixture of aggregate, polymer modified asphalt cement, and approved anti-strip additive. The permeable concrete base shall consist of a mixture of aggregate, portland cement, admixtures, and water.

307.02 MATERIALS. Materials shall comply with the following requirements.

307.02.1 Aggregates: The aggregates for both the permeable asphalt base and the permeable concrete base shall be 100 percent crushed stone conforming to the requirements of 1003.03.4.

307.02.2 Asphalt: The asphalt for asphalt treated permeable base shall be an approved polymer modified asphalt cement, or, complying with Section 1002. The percentage of asphalt cement shall be 2.0 percent to 4.0 percent by weight of the total mixture. Asphalt cement content and mixing process shall be such that all aggregates are visibly coated. The mixture shall retain 90 percent coating when tested in accordance with DOTD TR 317.

Submit a job mix formula for approval in accordance with Section 502.

307.02.3 Anti-Strip Additive: Use an Approved Materials List anti-strip additive complying with 1002.02.1 for the permeable asphalt base.

Add the anti-strip additive at the minimum rate of 0.5 percent by weight of asphalt and thoroughly mix with the asphalt cement at the plant. Additional anti-strip additive may be up to 1.2 percent by weight.

The proposed job mix formula shall indicate a single anti-strip additive rate, which is 0.1 percent greater than the percentage that will yield a minimum of 90 percent coating when tested in accordance with DOTD TR 317. The approved range shall be 0.2 percent by weight of asphalt, with the lower limit being the quantity determined in accordance with DOTD

TR 317 and the maximum limit not to exceed 1.2 percent by weight of asphalt.

307.02.4 Permeable Portland Cement Concrete: Use a Type I portland cement complying with Section 1001 for permeable concrete base.

Provide a minimum cement content of 235 pounds of portland cement per cubic yard of concrete. The water cement ratio of the mixture shall be not more than 0.37. Submit a mix design for approval in accordance with Section 901.

307.02.5 Admixtures: Admixtures for the permeable concrete base shall be from the Approved Materials List complying with 1011.02. The rate shall be as indicated in the Approved Materials List.

307.03 CONSTRUCTION

307.03.1 Permeable Asphalt Base: Place the permeable asphalt base in accordance with Section 502. Compact with a minimum of three passes of a 5- to 10-ton smooth steel-wheel roller conforming to Section 503 until no further displacement is noted.

Place permeable asphalt base at a temperature between 200°F to 260°F when measured in the hopper of the paving machine. Begin compaction when the temperature of the permeable asphalt base has cooled to approximately 160°F and complete before the temperature falls below 100°F.

307.03.2 Permeable Concrete Base: Place the permeable concrete base by slip forming in accordance with Section 601 or by an asphalt concrete paver in accordance with Section 503. Compact by using vibrating screeds or plates as directed. No construction joints will be required.

Immediately after concrete placement, cure the permeable concrete base by covering the entire surface and exposed edges with white pigmented curing compound in accordance with 601.03.10.

307.04 PROTECTION. Protect the permeable asphalt and permeable concrete bases from severe weather conditions and contamination by dust, dirt, mud, or other fine grained material. Protect by an approved method from the time of placement until placement of the following pavement layer. Do not permit traffic on the permeable asphalt base or permeable concrete base. Equipment required to place the pavement will be allowed, provided that it enters and exits as near as possible to the paving operation. Repair all

damage to the permeable bases caused by the contractor's equipment at no direct pay.

Remove and replace at no direct pay all portions of the permeable bases that become contaminated to the extent that drainage is reduced or inhibited.

Cover the permeable bases with the pavement within 15 working days after placement.

307.05 TOLERANCES. The finished surface of permeable asphalt base and permeable concrete base shall be uniform and shall not vary at any point more than 0.05 foot above or below the established grade. The cross-slope shall not vary by more than ±0.003 foot/foot.

Permeable asphalt base or permeable concrete base with a surface higher than 0.05 foot above the established grade shall be removed and replaced with permeable base which complies with these specifications or, when permitted, the high spots may be removed to within specified tolerance by any method that does not produce contaminating fines nor damage the base to remain in place. Grinding will not be permitted.

Permeable base with a surface lower than 0.05 foot below the established grade shall be removed and replaced with permeable base which complies with these specifications. When permitted, low areas not exceeding 1 inch shall be filled with subsequent roadway pavement at the time and in the same operation in which the pavement is placed at no direct pay.

307.06 TESTING. Before placing surfacing, core the permeable bases at the locations determined by the engineer in accordance with DOTD TR 602. All cores shall be taken in the presence of and given to the engineer for verification of base thickness.

307.07 MEASUREMENT. Permeable base will be measured by the square yard from the design quantities shown on the plans. Design quantities will be adjusted if the engineer makes changes to adjust to field conditions, plan errors are proven, or design changes are necessary. Determine design areas using the horizontal dimensions shown on the plans, the length being along the centerline of the base.

307.08 PAYMENT. Payment for permeable base will be made at the contract unit price per square yard, which shall include all materials, tools, incidentals and the performance of work necessary to complete these items.

Payment will be made under:

Item No.	Pay Item	Pay Unit
307-01	Permeable Base ___ in Thick	Square Yard

Section 308
Vacant

Section 309
In-Place Cement Treated Subgrade

309.01 DESCRIPTION. In-Place cement treated subgrade is primarily used for existing roadway reconstruction, typically for subgrade soils with a Plasticity Index (PI) not exceeding 20, unless otherwise specified. The design compressive strength criteria for in-place cement treated subgrade shall be 100 psi as determined in accordance with DOTD TR 432, Method B or C.

Treat subgrade soil materials with portland cement, blended hydraulic cement, or as directed. These specifications set forth the minimum requirements for construction of the treated subgrade; however, construct a treated subgrade that will provide adequate support for construction equipment and processes.

Submit a dust control plan to address weather, sight clearance, operational procedures, traffic control, and any other project specific concerns. Failure to maintain sight clearance will result in the engineer stopping contractor operations.

The Department will identify dust sensitive areas in the plans. In these specific areas, the dust control plan must also include environmental requirements.

Quality assurance requirements shall be as specified in the latest edition of the Department's publication titled *Application of Quality Assurance Specifications for Embankment and Base Course.*

309.02 MATERIALS. Materials shall comply with the following sections and subsections:

Portland Cement	1001.01
Blended Hydraulic Cement	1001.02
Water	1018.01

309.02.1 Determination of Cement Rate

309.02.1.1 Predetermined (Plan Specified): For portland cement, mix the roadbed material with the rate of cement by volume as shown on the plans.

309.02.1.2 Non-Predetermined: If the percent cement has not been predetermined, the rate will be provided by the engineer. The District

Laboratory may determine the percent of cement by volume in accordance with DOTD TR 432, Method B or C from materials sampled in-place on the project from isolated random areas selected by the engineer. Depending on the materials to be treated, normal testing time to determine the required cement content may require up to 21 calendar days.

309.02.1.3 Contractor Selected Cement Type: When the contractor elects to use blended hydraulic cement the rate of cement shall be determined in accordance with 303.02.1.3 at no expense to the Department.

309.03 EQUIPMENT. Furnish and maintain equipment necessary to produce a finished product meeting specification requirements in accordance with 303.03. The equipment will be approved prior to use.

309.04 CONSTRUCTION REQUIREMENTS

309.04.1 Treatment and Pulverization: Treat subgrade soils by mixing with portland cement in accordance with Section 303. Compact and finish treated materials in accordance with Section 203.

When traffic conditions warrant, and an adequate rolling pattern has been established that demonstrates density and pulverization as achieved, the engineer may reduce density frequency testing requirements to expedite construction. A change in subgrade materials will require testing at the original frequency until a new rolling pattern is established.

Make reasonable efforts to conform to the compaction requirements above. When field conditions make this impractical or detrimental, such as a yielding subgrade, establish an optimum rolling pattern to the satisfaction of the engineer. The engineer has the option of increasing or decreasing the percentages of cement based on field conditions. Determine optimum moisture of the mixture in accordance with DOTD TR 415 or TR 418. Increase the cement content by one percent by volume for every 3 percent of moisture content above optimum.

After treatment the pulverized mixture shall conform to the gradation requirements in Table 309-1.

Table 309-1
Gradation Requirements for In-Place Cement Treated Subgrade

U. S. Sieve, Inches	Percent Passing by Weight
$^3/_4$	95
No. 4	50

309.05 MEASUREMENT. The quantities of in-place cement treated subgrade for payment will be the design areas as specified in the plans and adjustments thereto. Design quantities are based on the horizontal dimensions of the completed in-place cement treated subgrade shown on the plans. Design quantities will be adjusted if the engineer makes changes to adjust to field conditions, plan errors are proven, or design changes are necessary.

DOTD TR 602 measurements for width and thickness will not be made, but the width and thickness will be checked by the engineer during construction.

309.06 PAYMENT. Payment for in-place cement treated subgrade will be made at the contract unit price per square yard, which includes cement, cement treatment, and water. If the actual required percent of cement differs from that required by the contract documents, payment will be increased or decreased based on the difference in required quantity of cement at the price of cement shown on paid invoices (total of all charges). The contractor shall provide copies of paid invoices for this determination. If the contract documents do not specify a percent cement, 6 percent will be used for treated subgrades for bid purposes.

Payment will be made under:

Item No.	Pay Item	Pay Unit
309-01	In-Place Cement Treated Subgrade ___in Thick	Square Yard

PART IV—SURFACE COURSES

Section No. **Page No.**

401 Aggregate Surface Course..... 215
402 Traffic Maintenance Surfacing 219

Section 401
Aggregate Surface Course

401.01 DESCRIPTION. Furnish and construct aggregate surface courses for roadways, shoulders, drives, or other facilities in accordance with these specifications, and in conformity with the lines, grades, thicknesses, and typical sections shown on the plans or already established.

401.02 MATERIALS. Furnish materials complying with the following subsections.

Stone	1003.01 & 1003.05.1
Sand-Clay-Gravel (Lime Treated)	1003.01 & 1003.05.2
Reclaimed Portland Cement Concrete	1003.01.3.1 & 1003.05.1
Reclaimed Asphalt Pavement	1003.01.3.2 & 1003.05.3
Water	1018.01
Lime	1018.02

Use uniformly blended aggregate surface course materials that have been sampled and approved prior to placement.

Unless otherwise approved in writing, use the same type material throughout the project.

401.03 EQUIPMENT. Furnish and maintain equipment necessary to produce a finished product meeting the requirements of these specifications. Obtain approval of equipment prior to use.

401.04 CONSTRUCTION

401.04.1 General: Obtain approval of the subgrade before placing aggregate surface course. Uniformly spread material removed from shoulders adjacent to the shoulder material.

On existing surfaces, where only placing aggregate surface course, remove vegetation, shape, and satisfactorily compact the surface prior to placing aggregate surfacing. For new or reconstructed surfaces construct subgrade in accordance with Section 203.

401.05 PLACING MATERIALS. Place material directly on the prepared and approved subgrade. Do not place surface course on damaged subgrade until repairs conforming to 401.04 have been completed and approved.

Do not place or spread aggregate surfacing materials on adjacent portland cement concrete or asphalt concrete pavements. Conduct aggregate surfacing operations so that pavement surfaces, edges, and joints are not damaged. Repairs to damaged areas shall be at no expense to the Department.

401.06 MIXING. Uniformly mix sand-clay-gravel with 6 percent lime by volume; for central mixing, use 5 percent lime. The sand-clay-gravel shall be sampled and approved prior to treatment with lime.

Add moisture to adequately control compaction.

401.07 SHAPING AND COMPACTING AGGREGATE SURFACE COURSE

401.07.1 General: Place material to required thickness, shape to the required section, and compact with an approved roller to a tight, uniform surface free from ruts and waves.

401.07.2 Stone and Recycled Portland Cement Concrete: After initial compaction, wet the surface as directed.

401.07.3 Reclaimed Asphalt Pavement: Compact with at least three passes of a roller approved by the Project Engineer.

401.07.4 Lime Treated Sand-Clay-Gravel: Compact and finish lime treated sand-clay-gravel within 72 hours after initial mixing with lime. If not compacted and finished within 72 hours, due to contractor's operations, recut lime at half the specified rate at no additional cost to the Department.

401.08 DIMENSIONAL TOLERANCES. When specifying net section measurement, the thickness and width of completed aggregate surface course will be checked for acceptance in accordance with DOTD TR 602. Correct to plan dimensions areas with deficiencies in excess of the following tolerances as required at no additional cost to the department.

401.08.1 Thickness: Under-thickness shall not exceed 3/4 inch. Over-thickness may be waived at no additional cost to the Department.

401.08.2 Width: Under-widths shall not exceed 3 inches for shoulders and 6 inches for roadways. Over-width may be waived at no additional cost to the Department.

When using vehicular measurement, the engineer will take measurements to ensure the work's conformance to plan dimensions.

401.09 MEASUREMENT.

401.09.1 Net Section: The quantities of aggregate surface course for payment will be the design volumes as shown on the plans and adjustments thereto. Base design quantities on the horizontal dimensions and the compacted thickness of the completed aggregate surface course shown on the plans. Design quantities will be adjusted if the engineer makes changes to adjust to field conditions, plan errors are proven, or design changes are necessary.

401.09.2 Adjusted Vehicular Measurement: Surface course material will be measured at the point of delivery by the cubic yard in approved hauling vehicles in accordance with 109.01.

Materials delivered by volume will be measured by the cubic yard in hauling vehicles and divided by the factors in Table 401-1 to determine the pay volume:

Table 401-1
Adjusted Vehicular Measurement
(Materials Delivered by Volume)

Material	Factor
Stone	1.30
Lime Treated Sand-Clay-Gravel	1.30
Recycled Portland Cement Concrete	1.30
Reclaimed Asphalt Pavement	1.50

Materials delivered by weight will be measured by the ton (2000 pounds) in hauling vehicles and divided by the factors in Table 401-2 to determine the pay volume:

Table 401-2
Adjusted Vehicular Measurement
[Materials Delivered by Weight)]

Material	Tons to Cubic Yards, Factor
Limestone	1.95
Sandstone	1.82
Porous Limestone	1.76
Lime Treated Sand-Clay-Gravel	1.89
Recycled Portland Cement Concrete	1.82
Reclaimed Asphalt Pavement	1.80

401.10 PAYMENT. Payment for aggregate surface course will be made at the contract unit price per cubic yard, which includes preparation of existing roadways and shoulders, and furnishing, placing, and compacting required aggregate materials, water, and lime.

Payment will be made under:

Item No.	Pay Item	Pay Unit
401-01	Aggregate Surface Course (Net Section)	Cubic Yard
401-02	Aggregate Surface Course (Adjusted Vehicular Measurement)	Cubic Yard

Section 402
Traffic Maintenance Surfacing

402.01 DESCRIPTION. Furnish and construct surfacing for maintenance of traffic on driveways, pipe crossings, short-term traffic on raw embankment, slope corrections, or other disturbed roadway sections as directed and in accordance with the following requirements.

402.02 MATERIALS. Furnish any of the following types of materials complying with the following sections and subsections and in accordance with the following requirements. Other materials must be approved in advance by the engineer.

Stone	1003.01 & 1003.05.1
Recycled Portland Cement Concrete	1003.01.3.1 & 1003.05.1
Reclaimed Asphalt Pavement	1003.01.3.2 & 1003.05.3
Asphalt Concrete [1]	502
Flowable Fill [2]	710

[1] All asphalt mixes in Section 502 will be allowed for surfacing materials.

[2] Flowable fill surface shall meet the excavatable requirements of Table 710-1.

402.03 EQUIPMENT. Furnish and maintain equipment necessary to produce a finished product meeting the requirements of these specifications. Obtain approval of equipment prior to use.

402.04 CONSTRUCTION REQUIREMENTS. Satisfactorily place, shape, compact, and maintain areas requiring traffic maintenance surfacing. When directed, reuse the aggregate material at adjacent locations when the material can be reasonably shifted by blading. When directed, material shall be loaded, hauled, and reused. Unless otherwise directed by the project engineer, remove and dispose of traffic maintenance surfacing when no longer necessary. Dispose in accordance with Section 202.

402.04.1 Mainline Surfacing: For mainline roadway, use traffic maintenance surfaces in accordance with Table 402-1 at the posted speed limit during construction. Aggregate surface is allowed only when all

aggregate table criteria are met. Hard surface is required when any hard surface table criteria is met.

Hard surface will be either asphalt concrete or excavatable flowable fill with a minimum thickness of 6 inches. Surfacing shall be uniform and smooth. Surfacing shall meet a 1/2 inch longitudinal tolerance with a 10-foot static straight edge and shall properly drain. Asphalt concrete surfaces shall have a minimum of 89 percent of maximum dry density.

Should a contractor's operation or sequence of construction extend the time an aggregate surface remains in place under traffic beyond four weeks, hard surfacing will be at no additional pay.

Should a contractor's operation or sequence of construction necessitate the use of aggregate in areas requiring hard surface, place the hard surface within 48 hours. Placement of aggregate surfacing in this case will be at no direct pay.

402.04.2 Non-Mainline Surfacing: Use either aggregate or hard surfacing for turnouts, drives, crossovers and other non-mainline segments of roadway. If using hard surfacing, it shall meet the requirements of 402.04.1.

Table 402-1
Mainline Traffic Maintenance Criteria

Surface Type	ADT	Posted Speed, mph	Time Surfacing to Remain In Place Under Traffic
Aggregate	≤5000	≤45	≤4 weeks [1]
Hard Surface	>5000	>45	>4 weeks

[1] Time may be extended with approval of the Project Engineer.

402.05 MEASUREMENT. Aggregate used for traffic maintenance surfacing will be measured at the point of delivery by the cubic yard in approved hauling vehicles in accordance with 109.01. No adjustment factor will be used.

Hard surfacing will be measured by the square yard at the roadway location.

402.06 PAYMENT. Payment for traffic maintenance surfacing, maintained and subsequently removed, when required, will be made at the contract unit prices per cubic yard or per square yard.

Aggregate materials reused by blading to adjacent locations will be at no expense to the Department. Aggregate material reloaded, hauled, and re-used will be paid at 50 percent of the contract unit price.

Payment will be made under:

Item No.	Pay Item	Pay Unit
402-01	Mainline Traffic Maintenance Surfacing (Aggregate) (Vehicular Measurement)	Cubic Yard
402-02	Mainline Traffic Maintenance Surfacing (Hard)	Square Yard
402-03	Non-Mainline Traffic Maintenance Surfacing (Aggregate) (Vehicular Measurement)	Cubic Yard

PART V—ASPHALT PAVEMENTS

Section No. **Page No.**

501 Thin Asphalt Concrete Applications 223
502 Asphalt Concrete Mixtures..... 234
503 Asphalt Concrete Equipment and Processes 270
504 Asphalt Tack Coat 283
505 Asphalt Prime Coat..... 285
506 Asphalt Curing Membrane 287
507 Asphalt Surface Treatment..... 289
508 Vacant 298
509 Milling Asphalt Pavement 299
510 Asphalt Concrete Pavement Patching,
Widening and Joint Repair 302

Section 501
Thin Asphalt Concrete Applications

501.01 DESCRIPTION.

501.01.1 General: Furnish and construct one or more courses of asphalt concrete mixture in conformance with these specifications and in conformity with the lines, grades, thicknesses, and typical sections shown on the plans or established.

Comply with Section 503, Equipment and Processes and the Application of Quality Assurance Specifications for Asphalt Concrete Mixtures (QA Manual).

These specifications apply to all asphalt concrete mixtures with plan thicknesses less than 1½ inches. The following mixtures are further described herein and as shown on the plans:

1. Dense Mix – allowed for traffic volumes < 3,500 ADT.
2. Coarse Mix – allowed for all traffic volumes. Can be substituted for Dense Mix without change order.
3. Open Graded Friction Course (OGFC) – allowed for all levels of traffic volume, and required when used on Interstate Highway System. The OGFC can be substituted for any Thin Asphalt Concrete application without change order. Use the same mixture type throughout the project length unless approved otherwise by the engineer.

501.01.2 Quality Assurance: It is the intent of these specifications that the mixtures produced and placed meet the requirements for 100 percent payment. Work shall meet the requirements of this section and be subject to acceptance by the Department.

Exercise quality control as defined in 101.03. When these specifications are not being met and satisfactory control adjustments are not being made, discontinue operations and notify the project engineer immediately until proper adjustments and uniform operations are established. Accomplish control by a program independent of the Department's testing and ensure that the requirements of the job mix formula (JMF) are being achieved and that necessary adjustments provide the specified results.

Do not begin daily plant operations unless the contractors' Certified Asphalt Concrete Plant Technician (Level 2 or Level 3) is at the plant. When the plant is in operation, have a Certified Asphalt Concrete Plant Technician at the plant or jobsite.

501.02 MATERIALS. Sample and test in accordance with the Material Sampling Manual and the test procedures described in Table 502-1

Keep accurate records including proof of deliveries of materials for use in these processes. Ensure that materials comply with the following Sections and Subsections and as specified in this section:

Asphalt	1002
Anti-Strip Additives	1002.02.1
Aggregates	1003.01 & 1003.06
Hydrated Lime	1018.02
Crumb Rubber	1002.02.2
Mix Release Agent	1018.10
Fibers	1002.02.5

501.02.1 Tack Coat: Ensure that tack coat meets the requirements of Section 1002. Apply tack coat as described in 501.08.1. Application rates are defined in Table 501-1. Use emulsions listed in the Approved Materials List.

For dense mixtures, apply a NTSS-1HM, SS-1H, CSS-1H, CSS-1HP, or a hot applied non-tracking tack (NTHAP).

For coarse and OGFC mixtures, apply a Polymer Emulsion Tack (PET) or SS-1L using the spray paver as described in Section 503.

On all non-interstate roadways, if not using a spray paver, use a hot applied non-tracking (NTHAP).

501.02.2 Asphalt Cement: Use asphalt cement grades as specified in Table 501-1. If the asphalt cement does not comply with the requirements of Section 1002, notify the project engineer and cease mix production until proper asphalt material is supplied. Allow grade substitution as specified in Section 502. PG82-22rm may be substituted for PG76-22m or PG70-22m.

501.02.3 Additives: Use anti-stripping additives from a source listed on the Approved Materials List. Add anti-strip at a minimum rate of 0.6 percent. Hydrated lime additive may be incorporated into all asphalt concrete mixtures at the rate specified in the approved JMF. Add hydrated lime and thoroughly mix with aggregates in conformance with 503.05.5. Hydrated lime may be added as mineral filler in accordance with 503.05.4 and 1003.06.6

501.02.4 Aggregates: Use an aggregate from Approved Material List with a maximum water absorption of 2 percent as reported on the Approved Material List. For Dense Mix, use aggregate from Approved

Materials List. Use aggregate that meets requirements of 1003.06. Submit a Certificate of Analysis with the JMF to the District Laboratory Engineer indicating conformance to Table 501-2.

501.02.5 Mineral Filler: If used, meet the requirements of 1003.06.6

501.02.6 Grit: When required to prevent draindown, use cellulose or mineral fiber, meeting the requirements of 1002.02.5. When used, add fibers at a rate sufficient to prevent draindown.

501.03 DESIGN OF THIN ASPHALT CONCRETE MIXTURES. Submit an aggregate gradation that conforms to Table 501-3 along with the Certificates of Analysis required in 501.02.4. Aggregate friction rating for coarse mix and OGFC will be in accordance with Table 502-3.

Design dense and coarse mixtures to midpoint of voids using the gyratory requirements of Table 501-1. For design of OGFC mixtures, the full range of void requirements is allowed. Report the corresponding asphalt content on the JMF. For all mixtures, submit to the District Laboratory Engineer a JMF proposal for approval which is representative of the mixture that will be produced and meets the design requirements prior to validation or production. Prior to JMF approval, present a Certificate of Analysis showing aggregate physical properties conforming to Table 501-2.

Design and report mix temperatures between 300°F and 350°F on the JMF.

A change in the asphalt cement source will require testing for Moisture Susceptibility in accordance with DOTD TR 317 and either AASHTO T324 or DOTD TR 322.

501.04 LOT SIZES. A lot is a segment of continuous production of asphalt concrete mixture from the same JMF produced for the Department at a specific plant, delivered to a specific DOTD project. A lot is defined as 2400 tons of mixture production, a sublot is 800 tons. The final lot may be increased up to 50 percent of an original lot size with the mutual agreement of the contractor and Project Engineer.

501.05 JOB MIX FORMULA (JMF) VALIDATION. Validate the JMF on the first lot (1200 ton, 3-400 ton sublots) of production for a project by meeting the requirements of Table 501-1 and 501-3. The District Laboratory and Contractor shall jointly test three sublots for theoretical maximum specific gravity (G_{mm}), percent air voids, percent asphalt cement content, and extracted aggregate gradation. Each individual test result shall meet specifications. The average values will be used for verification tolerances in

Table 501-4. Validate the mixture using AASHTO T324 loaded wheel and Gyratory AASHTO T312 through testing of gyratory mix or roadway core on the second day of production. If failure occurs, adjust mix and revalidate. If second failure occurs, redesign the mix. All JMF's shall be re-validated a minimum of every 2 years. Re-validation may consist of reviewing ongoing production plant data and plant verification data.

501.06 PLANT QUALITY CONTROL. Ensure that the plant equipment and processes conform to Section 503. Produce mixtures at temperatures not to exceed 350°F. Sample and test according to the Materials Sampling Manual. Prepare Gyratory specimen in accordance with AASHTO T312. Any change in material will require a new approved JMF.

Keep accurate records, including proof of deliveries of all materials used in this process.

Sample and test the mixture for extracted aggregate gradation, asphalt cement content, and theoretical maximum specific gravity (G_{mm}) testing at the frequency listed in the Materials Sampling Manual. Ensure that the average individual deviations from JMF target values of each test result meet the requirements of Table 501-4. For each lot, report all quality control data to the Department's Certified Plant Inspector. Apply the extracted gradation tolerances listed in Table 501-3 to the JMF design target gradation. Ensure that JMF target is within the range of extracted aggregate gradation listed in 501-3. The District Laboratory Engineer may require re-validation of the mix when the average of the Quality Control data indicates non-compliance with the specified limits or tolerances. Control charts may be requested by the engineer if mixture problems develop.

501.06.1 Acceptance and Verification: Meet the verification requirements of Table 501-03 and Table 501-04 tolerances.

The Department will:

1. Perform all acceptance and verification testing using the stratified random sampling approach in accordance with S605 of the Materials Sampling Manual.
2. Sample and test the mixture for Water Susceptibility and LWT testing at the frequency listed in the Material Sampling Manual.

501.07 ROADWAY OPERATIONS. Meet the requirements of 502.07 except as modified herein.

501.07.1 Weather Limitations: Ensure that Thin Asphalt Concrete complies with the weather limitations of 502.07.1 except that both the surface and ambient temperatures shall be a minimum of 60°F.

Do not place OGFC when ambient temperatures are predicted to drop below freezing, 32°F, within a 3 day forecast period by the U.S. National Weather Service (NWS).

501.07.2 Surface Preparation: Protect and cover manhole covers, drains, grates, catch basins and other such utility structures. Cut back all vegetation at the road edge. Sweep the surface clean of dust, dirt, caked clay, and loose foreign material. Remove and discard raised pavement markers prior to placement.

501.08 HAULING, PAVING AND FINISHING. Meet the requirements of 502.08 except as modified herein. Use fully sealed tarps on all loads. Load haul trucks to minimize segregation.

501.08.1 Application of Tack Coat: Before constructing the thin lift, apply an approved asphalt tack coat in accordance with Section 504. Spray the tack coat with a power asphalt distributor meeting the requirements of 503.13.1 or a spray paver meeting the requirements of 503.15.1. Spray tack coat uniformly and accurately across the paving width and monitor the rate of spray. Determine the tack coat application rate by road conditions and mix type. Meet the undiluted asphalt emulsion application rate in Table 501-1. Tack coat application rates above the minimum specified in Table 501.1 must be approved by the Engineer.

501.08.2 Placement: Place mixtures in accordance with processes and equipment described in Section 503. Deliver material to the paver at a uniform rate and in an amount within the capacity of paving and compacting equipment. Adjust the paver speed and number of trucks to maintain continuous paving operations. Keep the height of material in front of the screed at a uniform height.

Ensure the pavers are designed and operated to place mixtures to required line, grade and surface tolerance without resorting to hand finishing.

501.08.3 Paving: Place and compact the mixture to plan thickness. Place a smooth uniform mat over the full lane width.

501.08.4 Compaction: Comply with 502.09 except as modified herein. Compact the mixture applying a minimum of 3 passes over a single point on the road using a double drum steel wheel roller of sufficient weight to properly seat the aggregate without crushing. Roll longitudinal joints directly behind the paving machine. Do not vibrate except at transverse joints. Accomplish final compaction with a second roller. Compact and finish before the mixture temperature falls below 180°F.

501.09 ROADWAY QUALITY ASSURANCE. The Department will perform all plant acceptance and verification testing to meet the Materials Sampling Manual. The Project Engineer will verify that the tack coat application rate and mixture yield meet the requirements of Table 501-1.

Do not place asphalt concrete exhibiting deficiencies before placement such as segregation, contamination, lumps, non-uniform coating, excessive temperature variations, alignment deviations, variations in surface temperature or other deficiencies, apparent on visual inspection.

Poor construction practices such as handwork, improper truck exchanges, improper joint construction, or other deficiencies, apparent on visual inspection, will not be accepted.

501.09.1 Opening to Traffic: Do not open the new pavement to traffic or allow any roller to sit idle on the pavement until the rolling operation is complete and the material has cooled to a temperature where the mat will not be damaged by traffic.

501.09.2 Smoothness: Measure the International Roughness Index (IRI) using a Department approved automated profiler before and after laydown operations in the presence of a Project Engineer's representative. Measure IRI in accordance with DOTD TR644, on the travel lanes for highways and the center two lanes for airports before placement and meet Table 502-5 requirements. Ensure a maximum transverse deviation of 1/8 inch due to roller marks and 1/4 inch maximum deviation for longitudinal joint differences.

Submit initial and final measurements to the engineer on a USB data storage device.

501.10 MEASUREMENT. Measure the Thin Asphalt Concrete applications by the ton. Measure the tack coat in accordance with Section 504.

501.11 PAYMENT. Payment for Thin Asphalt Concrete mixture will be made at the contract unit price per ton which includes furnishing all required materials, labor, equipment, tools and incidentals necessary for producing the mixtures, preparing the surfaces on which the mixtures are to be placed, hauling the mixtures to the work site, and placing and compacting the mixtures. Asphalt tack coat will not be a pay item and will be considered incidental to the 501 item. However, if the engineer adjusts the application rate of tack coat from that specified by the contract document, payment for the asphalt mixture will be increased or decreased based on the difference in the applied quantity of asphalt emulsion shown on paid invoices (total of

charges). The contractor shall provide copies of paid invoices for this determination. Apply 95 percent payment to the 501 item when the tack coat rates do not meet the application rate as allowed by the engineer. Payment will be subject to the payment adjustment schedules as shown in Table 501-5.

Payment adjustments will be assessed on a per lot basis. The percent payment for the roadway lot will be the lowest value of the payment adjustment parameters. Adjustment for smoothness will be per travel lane for the entire project in accordance with Table 501-6.

Payment for removal of pavement markings shall be in accordance with applicable item.

Payment will be made at the contract unit price under:

Item No.	**Pay Item**	**Pay Unit**
501-01	Thin Asphalt Concrete (Dense Mix)	Ton
501-02	Thin Asphalt Concrete (Coarse Mix)	Ton
501-03	Thin Asphalt Concrete (OGFC)	Ton

Table 501-1
Asphalt Mix Design Requirements

Mix Type		**Dense Mix**	**Coarse Mix**	**OGFC**
Asphalt Cement Grade		PG 67-22	PG 70-22m	PG 76-22m
Gyratory Revolutions [1]		50	75	50
Minimum AC content, %		4.5	4.5	6.5
Air Voids, % [2]		4-6	6-8[3]	18-24[3]
Sands, Max. %		15	0[4]	0
RAP, Max %		10	0	0
LWT rut depth, 12 mm (max) @ no. passes, AASHTO T 324[4]		12,000	20,000	5000
Draindown, % max [5]		---	0.15	0.30
Water Susceptibility, Boil Test, DOTD TR 317, % min		90	90	90
Min.Tack Coat Application Rate, Undiluted gal/sq.yd. (0.40 gal/sq.yd maximum) [6]		0.08[8]	0.15	0.15

[1]Compact specimen according to AASHTO T 312.
[2]Design target voids at mid-point of void requirement. Full range allowed for OGFC.
[3]As computed using the measure of the physical volume (weight of compacted specimen)/ (height of compacted specimen x area of the compacted specimen).
[4] Compact LWT specimen to the target voids.
[5]As measured in accordance with ASTM D 6390.
[6]See 501.02.1 for allowable tack coats.
[7]If bleeding, ponding or slipping are evident, these rates may be reduced to a minimum of 0.04 gallon/square yard with a minimum 0.02 gallon/square yard residual with approval of the engineer.

Table 501-2
Aggregate Physical Properties

Test	Method	Coarse Mix and OGFC	Dense Mix
[1] Coarse Aggregate:			
Micro Deval, % loss max	AASHTO T-327	18	—
Flat and Elongated Ratio; 3:1, % Max.	ASTM D4791	25	—
Coarse Aggregate Angularity, % Crushed, Double Faced, Min.	DOTD TR 306	90	—
[1] Fine Aggregate:			
[2] Sand Equivalent, Min.	DOTD TR 120	60	40
Fine Aggregate Angularity (FAA), Min.	DOTD TR 121	45[3]	35[4]
Friction Rating		I, II[5]	I, II, III

[1]Applies to individual coarse aggregates having more than 10 percent retained on No. 4 sieve and to individual fine aggregates having more than 10 percent passing the No. 4 sieve.
[2]If sand equivalent test fails, the Methylene Blue Test in accordance with AASHTO TP 57-99 will be required with a specification maximum of 10.
[3]Use as-received material and test using AASHTO T-304, Method C, when quantity of material retained on individual sieve sizes do not meet the requirements.
[4]FAA of 45 for gravel calculated on the composite blend
[5]See Table 502-3.

Table 501-3
JMF Extracted Gradation and Production Tolerances

U.S. (Metric) Sieve % Passing		Dense Mix	Coarse Mix	OGFC	Production[1] Tolerances
3/4 inch		100	100	100	±4
1/2 inch		100	75-100	85-100	±4
3/8 inch		90–100	—	55-75	±4
No. 4		—	25-40	10-25	±4
No. 8		35-70	19-28	5-13	±3
No. 16		20-50	—	—	±2
No. 30		—	—	—	±2
No. 50		—	—	—	±2
No. 200		2-10	2.0-5.5	2-4	±1.5
Metered A/C, %					±0.1
Mix Temperature, ^{0}F					±25
Gmm	All Mixes				0.015

[1]Job Mix Formula (JMF) target based on validated mix design. For OGFC and Coarse Mix, the tolerance will not be allowed above the maximum limits of the No. 200 sieve.

Table 501-4
Quality Control and Production Tolerances

Property	Tolerance[1]
Fine Aggregate Specific Gravity, G_{sb}	±0.030
Coarse Aggregate Specific Gravity, G_{sb}	±0.020
Theoretical Maximum Specific Gravity, G_{mm}	±0.015
Air Voids, V_a, %	±1
# 4 Sieve, % passing	±4
#200 Sieve, % passing	±1.5

[1]Meet these specifications for all parameters where tolerances are not listed.

Table 501-5[1]
Payment Adjustment Schedules

Plant:	Percent of Contract Unit Price per Lot			
	100%	90%	80%	50[1]%
Theoretical Maximum Specific Gravity (Gmm) Average Deviation from Validated JMF Target Value	Less than 0.022	0.022-0.025	0.025-.027	> 0.027
Limits on Extracted Aggregate, Average Deviation from Table 501-3, JMF Validated Target[2]				
No. 4 Sieve	≤ 5.0	5.1 – 6.0	> 6.0-7.0	> 7.0
No. 200 Sieve	≤ 2.0	2.1 – 2.5	> 2.5-3.0	> 3.0
Roadway:				
Tack Coat Rate (applied undiluted) with a spray paver, gallon/sq. yd. Coarse Mix and OGFC	0.15 (min.)	0.14-0.08	0.08-0.04	< 0.04

[1]Reduced pay or reapplication at the contractor expense shall be as directed by the Chief Engineer.
[2]Gradation pay schedule applies to coarse and OGFC mixtures only.

Table 501-6
Smoothness Payment Adjustment Schedules

Percent of Contract Unit Price per Travel Lane			
	100%	90%	50%[1]
Initial IRI of ≤ 65	≤ 65	66-75	> 75
Initial IRI > 65 to 81	≤ 65 IRI	0-10% Higher IRI number than initial measure	> 10% Higher IRI Number than initial measure
Initial IRI > 81	20% Improvement of initial measure	19% improvement to equal to initial measure.	Higher IRI Number than initial measure

[1] 50% pay or reapplication at no direct pay shall be as directed by the Chief Engineer.

Section 502
Asphalt Concrete Mixtures

502.01 DESCRIPTION.

502.01.1 General: Furnish and construct asphalt concrete mixtures in accordance with Table 502-6 and in conformance with the lines, grades, thicknesses, and typical sections in the plans.

Comply with Section 503, Equipment and Processes and the Application of Quality Assurance Specifications for Asphalt Concrete Mixtures (QA Manual).

Use a DOTD certified laboratory accredited by AMRL, CMEC, or other accreditation agency approved by DOTD.

502.01.2 Lift Description and Mixture Types: The wearing course is defined as the final lift placed. The binder course is defined as the lift placed prior to the final lift as defined in the plans.

When a Section 501 thin lift mix is used in conjunction with construction of 502 mixtures, it is a finish course.

Mainline mixtures include wearing, binder and base courses for travel lane, ramps greater than 300 feet, interstate acceleration/deceleration lanes, turn lanes, and the two center lanes for airports.

Minor mixes include mixture used for bike paths, crossovers, curbs, detour roads, driveways, guardrail widening, islands, joint repair, leveling, medians, parking lots, shoulders, turnouts, ramps less than or equal to 300 feet, patching, widening, miscellaneous handwork, and any other mixture that is not mainline.

502.02 MATERIALS. Comply with applicable Part X subsections listed herein. Sample in accordance with the Materials Sampling Manual and ensure testing in accordance with the procedures listed in Part X and Table 502-1. Keep accurate records, including proof of deliveries of all materials used in asphalt concrete mixtures. Furnish copies of these records to the engineer upon request.

Aggregates	1003.01 & 1003.06
Anti-Strip Additives	1002.02
Asphalt	1002
Crumb Rubber	1002.02.2.
Hydrated Lime	1018.02
Mineral Fiber	1002.02.5

Mineral Filler	1003.06.6
Mix Release Agent	1018.10
Reclaimed Asphalt Pavement (RAP)	1003.01 & 1003.06.5
Warm Mix Additives	1002.02.4

Table 502-1
Test Procedures for Asphalt Concrete

Description	Test Method
Specific Gravity and Density of Compressed Asphalt Mixtures	DOTD TR 304
Theoretical Maximum Specific Gravity, G_{mm}	DOTD TR 327
Asphalt Cement Content, P_b	DOTD TR 323
Mechanical Analysis of Extracted Aggregate	DOTD TR 309
Moisture Content of Loose HMA	DOTD TR 319
Degree of Particle Coating (plant requirement)	DOTD TR 328
Bulk Specific Gravity and Absorption	AASHTO T 84, T 85
Coarse Aggregate Angularity, % Crushed (Double Faced)	DOTD TR 306
Fine Aggregate Angularity	DOTD TR 121
Flat and Elongated Particles	ASTM D 4791
Sand Equivalent	DOTD TR 120
Mixture Conditioning (Aging) of HMA Mixtures	AASHTO R 30
Superpave Volumetric Mix Design	AASHTO M 323
Preparing Gyratory Samples	AASHTO T 312
Asphalt Cement Draindown	ASTM D 6390
Longitudinal Profile Using Automated Profilers	DOTD TR 644
Thickness and Width of Base and Subbase	DOTD TR 602
Loaded Wheel Tester (LWT)	AASHTO T 324
Semicircular Bend Test (SCB)	TR 330

502.02.1 Asphalt Cement: Comply with Table 502-2.

If the asphalt cement does not comply with the requirements of Section 1002, cease mix production until proper asphalt material is supplied.

Table 502-2
Asphalt Cement Usage

Location	Mix Level	Asphalt Grade Required	Substitutions Allowed		
			Lower Grade[1]		Higher Grade
Mainline Wearing & Binder[2,3]	1	PG 70-22m	PG 67-22 (Binder only) with traffic volume < 3500 ADT		PG 82-22rm, and PG 76-22m
Mainline Wearing & Binder [2,3,4]	2 and SMA	PG 76-22m	PG 70-22m with Hydrated Lime	PG 70-22m (Binder Only)	PG 82-22rm
Base	1	PG 67-22	PG 58-28[5]		PG 82-22rm, PG 76-22m, PG 70-22m
Minor Mixes including Leveling[2,3]	ALL	PG 67-22			PG 82-22rm, PG 76-22m, PG 70-22m

[1]Lower grade substitutions are only allowed if LWT rut depths < 6mm for the design level.
[2]For single lift overlay match grade of overlay.
[3] Semicircular bend test (SCB), minimum, Jc=0.5 KJ/m2 required for all substitutions.
[4]Semicircular bend test (SCB), minimum, Jc=0.6 KJ/m2 required for all substitutions.
[5]When 21-30% RAP is used, PG 58-28 is required.

502.02.2 Additives.

502.02.2.1 Anti-Strip (AS): Add anti-strip additive at the minimum rate of 0.6 percent by weight of asphalt cement and thoroughly mix in-line with the virgin asphalt cement at the plant. Increase the anti-strip additive or change to different additive as needed to meet Loaded Wheel Test, LWT, requirements. Discontinue production until satisfactory adjustments are made when the amount of anti-strip additive is not in accordance with the approved JMF.

502.02.2.2 Hydrated Lime: When used, specify rate of hydrated lime additive on the Job Mix Formula. Add hydrated lime additive at a minimum of 1.5 percent and thoroughly mix with aggregates in conformance with 503.05.5 as required to meet LWT requirements.

502.02.2.3 Waste Tire Rubber Additive: When used, crumb rubber may be pre-blended or, with approval by the Materials Laboratory,

may be blended at the plant. The maximum rubber replacement is 10 percent by weight of asphalt.

When blending crumb rubber at the contractor's plant, add crumb rubber to a PG 67-22 material on the Approved Materials List. Add 30 mesh (or finer) crumb rubber as required to meet grade PG 82-22rm. Comply with 1002.02.2

502.02.2.4 Latex Additive: When added at the contractor's plant, blend a minimum of 1.0 percent residual latex by weight of asphalt cement to a PG 67-22 material on the Approved Material List, and in accordance with Section 503. Meet PG 70-22m requirement using pre-qualified asphalt material and latex.

502.02.2.5 Warm Mix Asphalt Additives: When used, add only approved warm mix chemical additives. Foaming is allowed.

502.02.3 Aggregates: Use aggregates from approved sources. Blend aggregates to meet Sections 502 and 1003.

502.02.3.1 Friction Ratings: Friction ratings for aggregates are determined in accordance with 1003.01.2.4. Table 502-3 describes the friction ratings and corresponding usage allowed for the current average daily traffic (ADT) shown on the plans. Friction rating requirements apply to the mainline wearing course only, unless a finish course is applied. If a finish course is applied, then the friction rating requirements do not apply to wearing course.

All binder and base mixes and minor mixes do not have aggregate friction rating requirements.

Table 502-3
Aggregate Friction Rating

Friction Rating	Allowable Usage
I	All mixtures
II	All mixtures
III	All mixtures, except mainline wearing courses with plan Average Daily Traffic (ADT) greater than 7000[1]
IV	All mixtures, except mainline wearing courses[2]

[1] When plan current average daily traffic (ADT) is greater than 7000, blending of Friction Rating III aggregates and Friction Rating I and/or II aggregates will be allowed for travel lane wearing courses at the following percentages. At least 30 percent by weight (mass) of the total aggregates shall have a Friction Rating of I, or at least 50 percent by weight (mass) of the total aggregate shall have a Friction Rating of II. The frictional aggregates used to obtain the required percentages shall not have more than 10 percent passing the No. 8 (2.36 mm) sieve.

[2] When the average daily traffic (ADT) is less than 2500, blending of Friction Rating IV aggregates with Friction Rating I and/or II aggregates will be allowed for travel lane wearing courses at the following percentages. At least 50 percent by weight (mass) of the total aggregate in the mixture shall have a Friction Rating of I or II. The frictional aggregates used to obtain the required percentages shall not have more than 10 percent passing the No. 8 (2.36 mm) sieve.

502.02.3.2 Reclaimed Asphalt Pavement (RAP): Keep reclaimed asphalt pavement separate from other materials at the plant in such a manner that will allow for Department inspection and acceptance. Keep stockpiles uniform and free of soil, debris, foreign matter and other contaminants. Allowable RAP percentages are defined in Table 502-6. Screen or crush RAP to pass a maximum of 2 inch sieve prior to use. Additional RAP is allowed in all mixes except for Airports and SMA when RAP stockpile is pre-screened on a 1 inch scalping screen.

502.02.3.3 Mineral Filler: When used, comply with the requirements of 1003.06.6.

502.02.3.4 Natural Sand: When used, meet the requirements of Table 502-6 and 1003.06.3.

502.02.3.5 Fibers: When required to prevent draindown, use cellulose or mineral fiber, meeting the requirements of 1002.02.5 When used, add fibers at a rate sufficient to prevent draindown.

502.03 DESIGN OF ASPHALT MIXTURES AND JOB MIX FORMULA (JMF) APPROVAL. Design all asphalt mixtures for optimum asphalt content in compliance with the mix design in accordance with AASHTO M323, AASHTO M325 for SMA, and the requirements of Table 502-6 and Table 1003-14.

At minimum, all design submittals must include the recommended materials proportions, extracted gradation, recommended mix and compaction temperatures, and supporting design data. Submit the recommended JMF electronically through Site Manager Materials (SMM) or other data system as designated by the Department for District Laboratory Engineer acceptance with all supporting design data. No mixture shall be produced until the proposed JMF has been accepted.

Indicate the optimum mixing and compaction temperatures as suggested by the asphalt binder supplier on the JMF. Mix temperatures are recommended by the asphalt supplier as determined by rotational viscosity or other means. Warm Mix Asphalt technology may be used to reduce this temperature and must be noted on the JMF. Warm mix asphalt may be substituted with a minimum production temperature of 275°F.

Once a plant is producing an acceptable JMF, keep JMF production within the specified tolerances. Changes will be reviewed and accepted by the District Laboratory Engineer as necessary.

The engineer may require a new mix design when roadway acceptance requirements are not being met or plant quality data indicates non-compliance.

502.03.1 Mixtures Design Substitutions: Use only Warm Mix Asphalt (WMA) additives that are listed on the Approved Material List.

The 3/4-inch Nominal Maximum Size (NMS) wearing course may be substituted for binder course but not substituted for base course. The 1-inch NMS binder course may be substituted for base course.

The 1/2-inch NMS wearing course may be substituted for incidental paving, Level A. Shoulders may be any mixture type shown in Table 502-4 regardless of design level except that shoulder wearing must be a 1/2-inch or 3/4-inch NMS mixture.

Apply all specification requirements for the substituted mixture with the following exceptions: When wearing course is substituted for binder course, Table 502-3 does not apply. When wearing or binder are substituted for binder or base, the allowable RAP percentage shall meet the intended use specified in Table 502-6.

When a 501 finish course and a 502 wearing course are required on a project, allowable RAP percentage for wearing may meet binder course requirement.

502.04 JOB MIX FORMULA VALIDATION AND APPROVAL.

The Department and contractor will jointly test plant mix to validate each JMF for mainline mixture and accept each JMF whenever a plant begins initial operations for the Department in a specific plant location, or whenever a plant experiences a change in materials or change in source of materials, or when there are significant changes in equipment, such as the introduction of a new crusher, drum mixer, burner, foaming device, etc. Evaluate each JMF at least once every two years. Meet LWT requirements and all applicable requirements of Table 502-6.

For Minor Mixes, validation is not required for mixture designs, but the mixture must meet specification requirements. In order to validate minor mixes, the plant G_{mm} must be determined.

The average of the first five (5) plant G_{mm}s will become the new JMF target.

For all mixes, validation is not required when the asphalt grade has changed or asphalt source has changed, but must meet LWT requirements and all applicable requirements of Table 502-6.

502.04.1 Validation Plant Lot: The validation plant lot ("VP-lot"), is a maximum of 2000 tons of plant produced mix. Divide into 5 equal parts for validation sampling and testing.

502.04.2 Validation: Report the mean, standard deviation, Quality Index and percent within limits (PWL) of the test results in accordance with the QA manual. The JMF is considered conditionally validated if the

following parameters are 71 percent within limits of the JMF and meet the specifications.

1. Theoretical Maximum Specific Gravity (G_{mm}),
2. Percent G_{mm} at $N_{initial,}$
3. Percent passing the No. 8 and No. 200 sieves,
4. Percent Air Voids at $N_{design,}$ and
5. VFA.

The average of all other validation tests shall meet the specifications limits in Table 502-6. The production can continue during conditional validation. The JMF is considered validated with passing LWT results. If the LWT fails twice, cease production and re-design. Upon validation of the JMF, the average of the validated results will become the JMF targets.

502.04.3 Payment for Plant Validation: Payment will be in accordance with 502.15.

The validation mixture is not paid separately, but is considered part of the roadway lot.

502.05 QUALITY CONTROL AND PLANT ACCEPTANCE. All quality control information, plant records, etc. will be considered part of the Department's acceptance decision. Exercise quality control over all materials and their assembly, design, processing, production, hauling, laydown and associated equipment to ensure compliance with Table 502-4 and all other specifications herein. At the end of each production day, notify the District Lab Engineer (DLE) and the DOTD Asphalt District Inspector (ADI) of the next scheduled mix production run and placement.

For plant quality control, a plant lot, or "P-Lot' is defined as 1000 tons of continuously produced mixture from one JMF. Obtain a sample of plant mixture and test the mixture once every 1000 tons using a random sampling approach. Minimum quality control testing for each P-Lot is as follows:

<u>Loose Mix</u>

1. Theoretical Maximum Specific Gravity, G_{mm}
2. % Asphalt Cement Content
3. Gradation
4. % Crushed
5. Temperature, and
6. % Moisture content

Compacted Specimen, N_{design}

1. % G_{mm} at $N_{initial}$
2. % Air Voids, V
3. % VMA
4. % VFA, and
5. % G_{mm} at N_{max} (1 per 5 P-Lots)

Age all loose mix tested for G_{mm} or volumetrics for one hour in accordance with AASHTO R30 prior to testing. Age warm mix for two hours.

Determine the rolling five test results average and standard deviation for aggregate gradation, asphalt content, air voids, and G_{mm}. Take corrective action or cease production when the latest rolling five test results show:

1. Air voids or G_{mm} fall below 71 PWL (based on the lastest rolling five test results); or
2. Average VFA is outside of specification limits; or
3. Gradation for the No. 8 and No. 200 sieve is outside of specification limits; or
4. Asphalt content is ±0.2% the JMF target.

Enter all plant quality control data into the Department's approved data management system. The full range of gradation mix tolerances will be allowed even if they fall outside the control points. The District Laboratory Engineer may require re-validation of the mix when the average of the Quality Control data indicates non-compliance with the specified limits or tolerances.

Measure the moisture content of the cold feed aggregates daily in accordance with DOTD TR 403. The moisture content of the final mixture, measured daily, shall not exceed 0.3 percent by weight (mass) when tested in accordance with DOTD TR 319.

502.06 PLANT INSPECTION AND AUDITS. All Department inspection procedures, including sampling and testing, and the contractor's quality control data form the basis for acceptance of the asphalt. The Department's Certified Asphalt Plant Inspector will randomly visit and inspect asphalt plants, sample and test material, and review documentation to ensure conformance to specification requirements. In particular, the inspector will take a minimum of the following samples which may be tested for verification:

Loose Mix

1. Theoretical Maximum Specific Gravity, G_{mm},
2. % Asphalt Cement Content,
3. Gradation, and
4. % Crushed

Compacted Specimen, N_{design} (Using contractor's equipment)

1. % G_{mm} at $N_{initial}$,
2. % Air Voids, Va,
3. % VMA, and
4. % VFA.

Compacted Specimen, 7.0 ± 0.5% AV (Using contractor's equipment)

1. Loaded Wheel Testing (LWT) as needed.

The inspector will review contractor data and documentation. The inspector will check the plant equipment, lab equipment and plant operations. The inspector will sample asphalt cement working tank and or transport during random plant visits and will obtain random asphalt cement transport samples as requested by the Materials Lab.

Lack of conformance after 5 P-lots to specification requirements may result in increased sampling, reduced pay, removal and replacement of the asphalt mixture, decertification of the technician, and/or decertification of the plant. Correct deficiencies or cease operations.

502.07 ROADWAY OPERATIONS.

502.07.1 Weather Limitations: Apply asphalt concrete mixtures on a dry surface when the ambient temperature is above 50°F for wearing courses and 40°F for base and binder courses. Material in transit, or a maximum of 100 tons in a surge bin or silo used as a surge bin, at the time plant operation is discontinued may be placed. All mixture placed is expected to perform satisfactorily and meet specification requirements. Inclement weather will be sufficient reason to terminate or not begin production.

When base course mixtures are placed in plan thicknesses of 2 3/4 inches or greater, disregard temperature limitations provided all other specification requirements are met. When a wearing course is substituted for a binder course mixture, apply the temperature limitation for binder course.

502.07.2 Surface Preparation: Maintain the surface being covered. Acceptance is required for each surface prior to placement of subsequent surface.

Roadway slope shall be established at the base course level unless otherwise authorized by the engineer. The absolute minimum lift thickness placed shall be 1/4 inch greater than the nominal maximum aggregate size as shown on Table 502-6. Failure to meet minimum thickness is subject to removal.

502.07.2.1 Cleaning: Sweep the surface to be covered clean of dust, dirt, caked clay, caked material, vegetation, and loose material by revolving brooms or other mechanical sweepers supplemented with hand equipment as directed. Remove excess joint filler from the surface by an approved method when mixtures are to be placed on portland cement concrete pavement or previously overlaid portland cement concrete. Remove any existing raised pavement markers prior to asphalt concrete overlay operations. Payment for removal of pavement markings will be in accordance with the applicable item.

Wash the surface with water in addition to brooming when brooming alone does not adequately clean the surface.

When tack coat is exposed to traffic for more than one (1) calendar day, becomes contaminated, or degrades due to inclement weather, reapply the tack coat at the initial recommended rate at no direct pay.

502.07.2.2 Applying Tack Coat:

502.07.2.2.1 Existing Pavement Surfaces: Before constructing each course, apply an approved asphalt tack coat in accordance with Section 504. Protect the tack coat and spot patch as required.

502.07.2.2.2 Raw Aggregate Base Course and Raw Embankment Surfaces: Apply an approved asphalt prime coat to unprimed surfaces, or protect in-place prime coat and spot apply prime coat as required, in accordance with Section 505.

502.07.2.2.3 Cement and Lime Stabilized or Treated Embankment and Base Course Surfaces: Apply an approved asphalt curing membrane when none is in place, or protect the in-place curing membrane and spot apply, as required, with asphalt material in accordance with Section 506.

502.07.2.2.4 Other Surfaces: Cover contact surfaces of curbs, gutters, manholes, edges of longitudinal and transverse joints, and other structures with a uniform coating of an approved asphalt tack coat complying with Section 504 before placing asphalt mixtures.

502.07.3 Joint Construction:

502.07.3.1 Longitudinal Joints: When constructing longitudinal joints, set the screed to allow approximately 2 inches onto the adjacent pass. Use approved 10-foot static straight edge to maintain no greater than 1/8-inch deviation in grade. Make necessary correction in joint before continuing operations. Offset longitudinal joints in one layer over those in the layer below by a minimum of 3 inches; however, keep the top layer joint 6 inches to 9 inches from the centerline of two lane highways. Offset 6 inches to 9 inches from lane lines when the roadway is more than two lanes. Construct the narrow strip first.

502.07.3.2 Transverse Joints: Construct transverse joints by milling or hand forming paper butt joints. Use an approved 10-foot static straightedge to identify the location to be cut back to maintain no greater than a 1/8-inch deviation in grade. Lightly tack the cut face of the previously placed mat before fresh material is placed. Rest the screed on shims that are approximately 25 percent of lift thickness placed on the compacted mat. Provide an adequate crew to form transverse joints. Additionally, meet the transverse joint surface tolerance requirements of Table 502-5. Make necessary corrections to the joint before continuing placement operations.

Offset transverse joints in succeeding lifts by at least 3 feet.

502.08 HAULING, PAVING AND FINISHING. Transport mixtures from the plant and deliver to the paver at a temperature no cooler than 25°F below the lower limit of the approved job mix formula, maintaining a temperature of the WMA mix not cooler than 245°F going through the paver. Send no loads so late in the day that completion of spreading and compaction of the mixture cannot be completed during daylight, unless artificial lighting has been approved and is on site.

Load haul trucks to minimize segregation.

Place each course of asphalt mixture in accordance with the specified lift thickness shown in Table 502-6.

With the engineer's approval, motor patrols may be used to level isolated depressions in the initial layer, provided this construction does not result in unsatisfactory subsequent lifts.

502.08.1 Coordination of Production: Coordinate and manage plant production, transportation of mix and placement operations to achieve a high quality pavement. Provide sufficient hauling vehicles to ensure continuous plant and roadway operations. The engineer will order a halt to operations when sufficient hauling vehicles are not available.

On final wearing course construction under traffic with pavement layers of 2 inches compacted thickness or less, the contractor will be permitted to

pave one travel lane for a full day and the adjacent travel lane the next work day. When the adjacent travel lane is not paved the next work day and the longitudinal joint is exposed to traffic for more than 3 calendar days, and it has been determined that the roadway edge is not true to line and grade as previously constructed, cut back the entire length of exposed longitudinal joint to lift thickness to a vertical edge and heavily tack unless a notch wedge device is used. When pavement layers are greater than 2 inches compacted thickness, place approximately 1/2 of each day's production in one lane and the remainder in the adjacent lane unless an approved notched wedge device is used.

Protect pavement from traffic until it has sufficiently hardened to the extent the surface is not damaged.

502.08.2 Paving Operations: When placing the final two lifts of asphalt concrete on the roadway travel lanes, use a material transfer vehicle (MTV) as described in 503.14. During continuous paving, maintain temperature of the mixture constant. At no time shall there be more than 50°F difference in temperature as measured in 300 linear feet of paving or 25°F across the full paved width. All mixtures shall flow through the paver hopper. Lift into the hopper any mixture dropped in front of the paver or reject such material and cast it aside. Deliver material to the paver at a uniform rate and in an amount within the capacity of paving and compacting equipment. Adjust the paver speed and number of trucks to maintain one truck waiting in addition to the one at the paver in order to maintain continuous paving operations. Maintain a uniform height of material in front of the screed.

Keep the paver steady and in constant alignment during mix transfer. Maintain a level of mix higher than the paver hopper feed slats at all times. Use pavers and operators capable of placing mixtures to required line, grade and surface tolerance without resorting to hand finishing.

Construct longitudinal joints and edges along established lines. Utilize some form of longitudinal control for the paver to follow, preferably a string line. Position and operate the paver to closely follow the established line. Correct irregularities in alignment by trimming or filling directly behind the paver. Check the texture for uniformity after each load of material has been placed. Check the adjustment of screed, feed screws, hopper feed, etc., frequently and adjust as required to assure uniform spreading of the mix to proper line and grade and adequate compaction. When segregation of materials or other deficiencies occur, suspend paving operations until the cause is determined and corrected.

Correct surface irregularities directly behind the paver. Hand placement will be allowed in accordance with 502.08.3 for surface repair, taking care never to cast material over the fresh surface.

Discontinue paving operations when any screed control device malfunctions during binder or wearing course placement operations. When malfunctions occur, limit material through the paver to that which is in transit. Assume responsibility of meeting all specifications and yield requirements, and bear the cost of any overrun during malfunctions. Do not resume paving operations until the malfunction is fixed.

When paving operations are interrupted, remove and replace at no direct pay, mixture that has cooled below the point that it cannot be finished, or compacted to meet specifications. When additional mix is required to increase superelevation in curves, the use of automatic slope control is optional. However, ensure slope by measuring with a slope board. Allow the engineer use of the slope board upon request.

Use the traveling reference plane method of construction for airport runways unless designated otherwise on the plans. Unless the erected string line is required or directed, use the 27-foot (minimum) traveling reference plane method of construction for roadway travel lanes. The requirements of 502.08.2.1, 502.08.2.2, and 502.08.2.3 shall apply for mechanical pavers.

502.08.2.1 Traveling Reference Plane: Obtain approval of the traveling reference plane method before use. After the initial paving strip of each lift is finished and compacted, place adjacent paving strips to the grade of the initial paving strip using the traveling reference plane or shoe device to control grade and a slope control device to control cross slope.

On multilane pavements, the initial paving strip and the sequence of lane construction will be subject to approval.

When both outside edges of the paving strip being placed are flush with previously placed material, do not use the slope control device. A grade sensor is required for each side of the paver.

In superelevated curves, the cross slope shall be changed from that specified for tangents to that specified for superelevation in gradual increments while the paver is in motion so a smooth transition in grade is obtained. This change in cross slope shall be accomplished within the transition distance specified.

This is the minimum acceptable method and the contractor must meet or exceed current surface tolerance specifications.

502.08.2.2 Erected Stringline: Use the erected stringline method in isolated areas as directed by the engineer. This method may be used on the first lift of asphalt when the underlying new or reconstructed

bases do not have grade control requirements. Equip pavers for roadway travel lanes with automatic screed and slope control devices when used with an erected stringline.

An erected stringline shall consist of a piano wire or approved equal stretched between stakes set at no greater than 25-foot intervals. Tension the stringline between supports so that there is less than 1/8 inch variance between supports when the sensor is in place. If required, place the initial paving strip of the first lift constructed using an erected stringline referenced to established grade. When permitted, mixtures required to level isolated depressions may be placed without automatic screed control. Subsequent lifts may be constructed by use of the traveling reference plane, provided surface and grade tolerances are met on the previous lift.

Only one grade sensor and the slope control device are necessary for roadways with a normal crown on tangent alignment. Superelevated curves will require the use of two grade sensors and two erected stringlines to obtain proper grade and slope; however, when the automatic screed control device is equipped with a dial or other device which can be conveniently used to change the cross slope in small increments, superelevated curves may be constructed using this device and one erected stringline.

After the initial paving strip of the first lift is finished and compacted, lay adjacent paving strips using an approved traveling reference plane.

502.08.2.3 Without Automatic Screed Control: When permitted, pavers without automatic screed control may be used for pavement patching, pavement widening, paved drives and turnouts.

502.08.3 Hand Placement: When the use of mechanical finishing equipment is not practical, the mix may be placed and finished by hand to the satisfaction of the engineer. During paving operations, material shall be thoroughly loosened and uniformly distributed. Material that has formed into lumps and does not break down readily will be rejected. Check the surface before rolling and correct irregularities.

502.09 ROLLING AND COMPACTION.

502.09.1 General: After placement, uniformly compact mixture by rolling while still hot, to a density that complies with Table 502-5. If continuous roller operation is discontinued, move rollers to cooler areas of the mat where they will not leave surface indentations. The use of steel wheel rollers in the vibratory mode, which result in excessive crushing of aggregate, will not be permitted.

Utilize experienced operators when rolling the mixture using consistent rolling sequences and uniform methods to achieve specified density and

smoothness. Uniformly overlap preceding passes of individual roller passes to ensure complete coverage of the paving area. Do not tear or crack the mat by varying the roller speed, amplitude, vibration frequency or other roller operation. Operate non-vibrating steel wheel rollers with drive wheels toward the paver. Correct any operation causing displacement, tearing or cracking of the mat.

Prohibit use of equipment, which leaves tracks or indented areas that cannot be corrected in normal operations or fails to produce a satisfactory surface. Stop use of equipment resulting in accumulation of material and subsequent shedding of accumulated material into the mixture or onto the mat.

Keep rollers of steel wheel rollers properly moistened without excess water to prevent adhesion of mixture to rollers.

Maintain adequate heat for pneumatic tire rollers to prevent mix from adhering to tires. Operate the pneumatic tire roller at a contact pressure which will result in a uniform, tightly knit surface. Keep the pneumatic tire roller approximately 6 inches from unsupported edges of the paving strip; however, when an adjacent paving strip is down, overlap the adjacent paving strip approximately 6 inches.

Vibratory rollers may be used provided they do not impair the stability of the pavement structure or underlying layers. Vibratory rollers shall not be used on the first lift of asphalt concrete placed over the asphalt treated drainage blanket. When mix is placed on newly constructed cement or lime stabilized or treated layers, do not use vibratory rollers until base is approved by the engineer and not for at least 5 days after such stabilization or treatment.

It is the responsibility of the contractor to determine the number, size, and type of rollers to sufficiently compact the mixture to the specified density and surface smoothness. Ensure that the rolling equipment is capable of maintaining the pace of the paver and conforms to 503.16.

The surface of mixtures after compaction shall be smooth and true to cross slope and grade within the tolerances specified. Remove mixtures that become loose, broken, contaminated or otherwise defective and replace with fresh hot mixture compacted to conform to the surrounding mixture.

Excessive rippling of the mat surface will not be accepted. Ripples are small bumps in the pavement surface which usually appear in groups in a frequent and regular manner. No more than 12 ripples or peaks will be allowed in any 100-foot section. Rippling indicates a problem with the paving operation or mix that requires immediate corrective action by the

contractor; otherwise cease operations. Correct unacceptable areas at no direct pay.

After rolling, ensure that newly finished pavements have a uniform, tightly knit surface free of cracks, tears, roller marks or other deficiencies. Correct deficiencies at no direct pay and adjust operations to correct the problem. This may require the contractor to adjust the mix or furnish additional or different equipment.

502.09.2 Hand Compaction: Along forms, curbs, headers, walls and at other places inaccessible to rollers, compact the mixture uniformly to the satisfaction of the engineer with approved hand tampers or mechanical tampers, conforming to 503.17.

502.10 ROADWAY LOT SIZES. A roadway lot is determined as mix placed consecutively on the project from a specific JMF.

502.10.1 Mainline Mix Lot Sizes:

The mainline sublot size is 7500 linear lane feet; the mainline lot is five sublots or 37,500 linear lane feet. Any project with less than 37,500 linear lane feet for any mix type is also defined as a lot. The final mainline lot size may be extended one sublot with the approval of the engineer.

502.10.2 Minor Mix:

Minor mix lots will be defined as 1000 tons delivered to the project by mix type. The following types should be kept in separate lots.

502.10.2.2 Minor Lots with Density Requirement: Minor mix lots with density requirements are 1000 tons. These include bike paths, crossovers, detour roads, parking lots, patching, widening, uniform leveling thicker than 1.5 inches, tapers, and shoulders paved independently which are less than 8 feet wide.

502.10.2.3 Minor Lots without Density Requirement: Minor mix lots such as curbs, driveways, guardrail widening, islands, joint repair, spot leveling, medians, turnouts and $\leq$ 4 feet shoulder paved with the mainline do not have density requirements. Make compaction effort to the satisfaction of the engineer. Lots are 1000 tons.

For projects, or separate locations within a project, requiring less than 250 tons, the JMF, materials, and plant and paving operations shall be satisfactory to the engineer. Sampling and testing requirements may be modified by the engineer and the payment adjustment for deviations waived.

502.11 ROADWAY ACCEPTANCE. Acceptance testing for pavement density and dimensional tolerances will be conducted on that portion of the

lot placed on each contract. Acceptance testing for surface tolerance will be conducted upon completion of mainline paving.

Do not place asphalt concrete mixture exhibiting deficiencies such as segregation, contamination, lumps, non-uniform coating, excessive temperature variations, or other deficiencies apparent on visual inspection.

Correct and/or replace at no direct pay any asphalt concrete mix exhibiting deficiencies, such as segregation, contamination, alignment deviations, variations in surface texture and appearance or other deficiencies, apparent on visual inspection. Poor construction practices such as handwork, improper truck exchanges, improper joint construction, or other deficiencies, apparent on visual inspection, will be corrected at no direct pay.

502.11.1 Density: Obtain pavement samples from each sublot within 24 hours after placement. When this falls on a day the contractor is not working, sampling will be done within 3 calendar days. Sample at locations determined by the PE using random number tables shown in DOTD S605.

When the sampling location determined by random sampling falls within areas that are to be replaced or within 18 inches of the unsupported pavement edge, another random sampling location will be used.

Take cores, approximately 6 inches in diameter, with an approved core drill. Furnish samples cut from the completed work. Replace removed pavement with hot or cold mixture and refinished during the work day coring is performed at no additional pay. Sample in the presence of the engineer's representative. Do not use cores less than 1 3/8 inches thick for payment determination. For transport by parties other than DOTD representatives, ensure that the cores are individually wrapped, sealed, signed, and dated by the DOTD inspector or representative using an approved method. Any evidence of tampering with the core will result in the cores being rejected and additional pavement samples being required.

The engineer or his representative will transport cores in approved transport containers. When allowed, the contractor or third party will transport in an approved, locked transport container.

Divide the 7500-linear-lane-foot sublot into three segments of 2500 linear feet each. Obtain one acceptance core from each segment for a total of three cores. Take a verification core randomly from the 7500-linear-foot sublot. Take a resolution core randomly from the 7500-linear-foot sublot. There are five 7500-foot sublots for each 37,500 linear foot lot. For each lot, there are a total of 15 acceptance cores, 5 verification cores and 5 resolution cores.

For project lots between 2500 and 5000 linear feet, take two acceptance cores per sublot. Projects having less than 2500 linear feet will require 3

cores. Sampling for projects with less than 250 tons may be modified by the Project Engineer.

502.11.1.1 Testing of Roadway Cores (Method 1): The District Laboratory will calculate the density of each acceptance roadway core using the G_{mb} of the core and the representative maximum specific gravity, G_{mm}, in accordance with 502.05.

The density requirement for each lot is shown in Table 502-5. Cores will be retained for a period of 10 days after density is reported.

502.11.1.2 Testing of Roadway Cores (Method 2) Contractor's Testing of Roadway Cores in Acceptance Decision:

With proven plant production consistency, and when recommended by the District Laboratory Engineer and approved by the Materials Engineer, contractor may request to be allowed to sample and test roadway cores for acceptance at no cost to the Department in lieu of District Laboratory acceptance testing. Density calculations for each acceptance roadway and verification core will utilize the G_{mb} of the core and the representative maximum specific gravity, G_{mm} as determined in accordance with 502.05. Refer to 502.11.1 for core responsibility. The District Laboratory roadway lot verification will be based on a means comparison between the District Laboratory verification average and the contractor acceptance average for each lot. If the means comparison produces a difference, use the resolution cores for pay determination. The Department will send the resolution cores to a certified Independent Assurance (IA) laboratory to determine pay in accordance with 502.11.1.5.

For Method 2: The plant production consistency will be determined as follows: The Department will continuously monitor plant data and roadway data by JMF, by plant, by contractor. Plant data will be monitored in accordance with 502.06. Roadway data will be monitored using statistical methods comparing means and variances (F and t) tests. Continued use of Method 2 is allowed unless the plant or roadway data fail to verify with data set of a minimum of 45 contractor acceptance tests and 15 DOTD verification tests results, and it is determined by the DLE and Independent Assurance team that the contractor's production data meets requirements.

If the F and t test fail an investigation shall be conducted by the IA team. If the contractor data after F and t analysis is performed and is found to be error, DOTD acceptance testing of roadway cores will resume and independent accredited laboratory could be required for plant testing at no cost to the Department until such time as the problem is identified and resolved.

502.11.1.3 "Minor with Density" Requirements: For Method 1: When density is specified in Table 502-5, the roadway inspector will identify core locations to be cut by the contractor. The District Laboratory will test three cores for density every 1000 tons per mix type placed per roadway sampling procedure mentioned above and pay in accordance with Table 502-7. The District Laboratory will calculate the density of each roadway core using the G_{mb} of the core and the representative maximum specific gravity, G_{mm}, in accordance with 502.05. For Method 2: The contractor will perform acceptance test per above method. Table 502-7 is used to compute pay.

502.11.1.4 Minor Mix without Density: This minor mix shall have a neat, uniform appearance and be compacted by methods to the satisfaction of the engineer. Collect one loose mix specimen, from roadway, per project, for G_{mm} verification.

502.11.1.5 Verification: One core will be selected every 7500 linear lane feet and will be evaluated by either Method 1 or Method 2 in accordance with 502.11.1.1.

502.11.1.6 Resolution. One core from each 7500 linear lane feet of placed mix will be chosen at random and will be double sealed, signed by both contractor and Department's certified inspectors in accordance with the Quality Assurance Manual as required or for documentation. The resolution core will be tested at a certified IA laboratory as described in the QA manual.

502.12 SURFACE TOLERANCE EQUIPMENT, QUALITY CONTROL, ACCEPTANCE, MEASUREMENT AND PAYMENT ADJUSTMENT. Measure the top two lifts of the mainline travel lanes with an approved inertial profiler. Maintain record of intermediate measures of smoothness quality as described herein. Final acceptance will be based on the last measurement taken on the final wearing course of the travel lanes. Measurement of the center two lanes will be required for airports.

Constantly monitor equipment, materials, and processes to ensure that surface tolerance requirements are met.

502.12.1 Equipment: For longitudinal surface tolerance quality control testing and acceptance testing on mainline wearing and binder courses, furnish and use a DOTD certified inertial profiler. Certified profilers will have a DOTD decal indicating the date of certification and profiler system parameter settings. Measure longitudinal surface profile in inches per mile in accordance with DOTD TR 644 and report as the International Roughness Index (IRI).

Verify the profiler system parameter settings before each run. Demonstrate the daily set up procedure and pre-operation tests in accordance with the manufacturer's procedures and DOTD TR 644. Ensure that a copy of the manufacturer's setup, pre-operation, and general operating procedures for measuring surface tolerance are available at all times during measurement.

For transverse quality control testing and for longitudinal quality control testing for wearing course on bike paths, detour roads, parking lots, and shoulders; furnish and use an approved 10-foot metal static straight-edge and electronic or static level.

Profiler system parameter settings shall be verified before and during each run by the DOTD inspector. For transverse, cross slope and grade testing, furnish a 10-foot metal static straightedge and electronic or static level for Department use.

502.12.2 Longitudinal Smoothness Quality Control: Within 7 calendar days of placement, for mainline wearing and binder courses, run the certified profiler. View the raw data with ProVAL to determine IRI and to view Profilograph Simulation for each wheelpath. Make corrections to operation and/or mixture to ensure that the overall ride and individual bump requirements are met. Correct all individual bumps which are more than 1/4 inch as identified on Profilograph Simulation or when tested with a 10-foot metal static straightedge. Ensure that the following quality requirements are met:

1. Produce IRI which meets the requirements for 100 percent pay in accordance with Table 502-8. Continued surface tolerance penalties are not allowed.

2. Correct all individual bumps which are more than 1/4 inch when tested with a 10-foot metal static straightedge. Utilize the Profilograph Simulation on ProVAL to help identify these bumps.

3. Correct ripples to the satisfaction of the engineer. Report Profilograph Simulation for areas with 12 or more small, regular bumps in a 100-foot section or for any areas in question.

Minor mixes shall comply with Table 502-5. For minor mixes, use the 10-foot metal static straightedge to check for conformance to specifications.

502.12.3 Transverse Smoothness, Cross Slope, and Grade: The Department will test the surface of the binder and wearing courses at selected locations for conformance to the surface tolerance requirements of this subsection and Table 502-5. Make corrections as directed in accordance with 502.12.4.

502.12.3.1 Transverse Smoothness: Areas with surface deviations in excess of specification limits shall be isolated and corrected in accordance with 502.12.4. Control the transverse surface finish.

502.12.3.2 Cross Slope: When the plans require the section to be constructed to a specified cross slope, take measurements at selected locations using a stringline, a slope board, an electronic or static level mounted on a 10-foot metal static straightedge, or other comparable device. Control the cross slope for each lane to comply with the tolerances shown in Table 502-5. Make corrections in accordance with 502.12.4.

502.12.3.3 Grade: When the plans require the pavement to be constructed to a specified profile grade, test for conformance at selected locations, using a stringline or other comparable device. Control grade variations so that the tolerances shown in Table 502-5 are not exceeded. Grade tolerances shall apply to only one longitudinal line, such as the centerline or outside edge of pavement. Make corrections in accordance with 502.12.4.

502.12.4 Correction of Deficient Areas: Correct areas as required in 502.12.2 and those not meeting Table 502-5, and Table 502-8. Correct wearing and binder courses by grinding. In lieu of grinding, the Project Engineer may penalize the contractor $800 per area of small individual bumps, and/or per "Ripple" as defined in 502.12.2.

502.12.4.1 Deficiencies in Mainline Wearing Course: Correct deficiencies in the final wearing course by removing and replacing mixture, or by diamond grinding or other approved device across the lane and applying a light tack coat, or by furnishing and placing a supplemental layer of wearing course mixture at least 1 1/2 inches compacted thickness for the full width of the roadway meeting specification requirements at no direct pay. If the supplemental layer does not meet specification requirements to the satisfaction of the engineer, remove and replace or correct it by other methods approved by the engineer.

For areas that will not be improved by grinding such as minor dips, extreme vertical curves, areas with < 1/4 inch bump as measured with a 10 feet metal static straight edge, the engineer may waive the requirement to grind.

502.12.4.2 Deficiencies in Mainline Binder Courses: Correct deficiencies in binder course: longitudinal, transverse, cross slope, and grade to meet specification requirements at no direct pay. Make corrections before subsequent courses are constructed.

502.12.4.3 Deficiencies in Minor Mixes: Correct deficiencies in minor mixes by diamond grinding or approved method at the project engineer's direction.

502.12.5 Surface Tolerance Acceptance: Measure the top two lifts of the mainline travel lanes with an approved inertial profiler. Final acceptance will be based on the last measurement taken on the final wearing course of the travel lanes. Measurement of the center two lanes will be required for airports.

502.12.5.1 Longitudinal Surface Tolerance Acceptance: Measure surface tolerance at the completion of the project and after all corrections have been made or at an approved portion of the project in accordance with 502.12.2. Measure the mainline wearing course continuously from start to finish in the direction of travel. The measurement shall be performed by the contractor in the presence of a Department representative. The measurement may also be made by the Materials and Testing Section, or by a private company approved by the Department. Report one IRI measurement in inches per mile for the entire project. A stand-alone pay adjustment factor will be determined in accordance with 502.15.

Place a start and stop mark at the beginning and end of each travel lane so that measurements can be rerun by the Department if needed. Interim measurements of a portion may be allowed, with approval of the engineer, as follows:

1. For partial acceptance in accordance with 105.17.1.
2. Due to phasing or sequence of construction, this measurement may result in 100 percent pay or less. However, payment exceeding 100 percent for this section of roadway will only be allowed if the smoothness re-measured at the completion of the project meets the requirements of Table 502-8.
3. For an unavoidable lengthy delay, apply the same payment criteria as No. 2 above.

The mainline longitudinal surface tolerance IRI specification requirements are shown in Table 502-8. Perform profiler testing and submit data to the engineer before starting paving operations. To ensure that the contractor has corrected deficiencies, the Department will spot check for 1/4 inch bumps in accordance with 502.12.2. Although grinding may be waived by the engineer, the measured roughness will still contribute to the total IRI for the project.

A DOTD inspector will be present for the final test run and will immediately receive a copy of the raw data, the ".erd file" and any files with information about the project, the operator, the equipment, the settings, daily

pre-operation results, and a copy of the IRI results via USB flash drive provided by the contractor. In addition to the data transferred by USB storage device, provide to the engineer a paper copy of the IRI report. Acceptance for the project will be in accordance with Tables 502-8, based on the data. The Department may elect to perform and utilize independent ride quality test results for acceptance at any time.

502.12.5.2 Exclusions: The final IRI measurement shall be taken in entirety, without exclusions. The Department will then review the profile report obtained for each lane of the mainline wearing course. In special cases or extenuating circumstances, the engineer may isolate or exclude sections of the profile. These include the following:

1. Bridge ends, and sections that are within 150 feet of bridge ends.
2. Outside wheelpath of curb and gutter sections that require adjustment in order to maintain adequate drainage.
3. Manholes, catch basins, valve and junction boxes.
4. Street intersections or rail road crossings of a different grade.
5. Structures located in the roadway which cause abrupt deviations in the profile.
6. Transitions to and from ramps and turn lanes and sections within 200ft of the limits of the project if the limits begin or end at an intersection.
7. Sections where the project engineer determines that attaining smoothness is beyond the contractor's reasonable control.

Exclusions will not be used to simply isolate sections of road that are in poor condition when the project is let. The roughness in excluded areas will not be included in the total IRI used for payment purposes, but shall meet the requirements of 502.12.2. The quantity of asphalt represented by the length excluded will not receive a pay adjustment for surface tolerance.

502.12.6 Surface Tolerance Measurement: Measure and report the average IRI of each wheel path of each mainline lane in inches per mile and reach mainline lane prorated for the entire project.

The theoretical quantity is computed by using the total length of lanes, the plan thickness, and the plan width, excluding shoulders and minor mixes. Adjust the tons as necessary affected represented for each mainline travel lane.

502.12.7 Payment Adjustment for Surface Tolerance: Apply a percent payment adjustment for the quantity of tons represented in each land of the mainline wearing course. This pay adjustment is in addition to pay adjustments for density as described in 502.15.2. For mainline wearing course, a separate pay adjustment for surface tolerance measured on the mainline wearing course based on Table 502-8 shall apply. Apply the adjustment to the theoretical lane quantity and contract unit price.

502.13 DIMENSIONAL REQUIREMENTS. Ensure that mixtures conform to the following dimensional requirements only. No other acceptance tests will be required for these mixtures. Over-thickness and over-width will be accepted at no direct pay.

502.13.1 Thickness: For mixture specified for payment on cubic yard or square yard basis, thickness of mixtures will be determined by the Department in accordance with DOTD TR 602. Under-thickness shall not exceed 1/4 inch.

Correct area under-thickness in excess of 1/4 inch to plan thickness at no direct pay. Furnishing and placing additional mixture in accordance with 502.12.4.1. Correct excesses of 1/2 inch for category D, Table 502-8. When grade adjustments do not permit placing additional mixture, remove the deficient under-thickness area and replace at no additional pay.

For mixtures specified for payment on a per ton basis, thickness of mixtures will be determined by the plans, Table 502-6, and that agreed to with the Project Engineer. Under thickness shall not exceed 1/2 inch. Removal and replacement of deficient under-thickness area(s) or other approved remediation agreed to by the Project Engineer will be at no direct pay.

502.13.2 Width: The width of completed courses will be determined in accordance with DOTD TR 602. Correct under-widths by furnishing and placing additional mixture to a minimum width of 1 foot and plan thickness at no direct pay.

502.14 MEASUREMENT. Measure asphalt concrete by the ton of 2,000 pounds from printed weights as provided in Section 503. Provide stamped printer tickets with each truckload of material delivered denoting JMF

number and plant tonnage. Material lost, wasted, rejected or applied contrary to specifications will not be measured for payment.

Estimated quantities of asphalt concrete shown on the plans are based on 110 lb/sq yd/inch thickness. The measured quantity of asphalt mixtures will be multiplied by the following adjustment factors to obtain the pay quantity.

Theoretical Maximum Specific Gravity, (G_{mm}) (DOTD TR 327)	Adjustment Factor
2.340 - 2.360	1.02
2.361 - 2.399	1.01
2.400 - 2.540	1.00
2.541 - 2.570	0.99
2.571 - 2.590	0.98

The adjustment factor for mixtures with theoretical maximum specific gravities less than 2.340 or more than 2.590 will be determined by the following formulas:

Theoretical maximum specific gravity less than 2.340:

$$F = \frac{2.400}{S}$$

Theoretical maximum specific gravity more than 2.590:

$$F = \frac{2.540}{S}$$

where,

F = quantity adjustment factor

S = theoretical maximum specific gravity of mixture from approved job mix formula

502.14.1 Volume or Area Measurement: The quantities for payment will be the design quantities specified in the plans and adjustments thereto. Design quantities will be adjusted when the engineer makes changes to adjust the field conditions or when design changes are necessary. Design quantities are based on the horizontal dimensions and compacted thickness of the completed course shown on the plans.

502.15 PAYMENT.

502.15.1 Payment General. Payment for all mixes will be at the contract unit price of asphalt mixture accepted on the roadway. Payment for asphalt concrete will include furnishing all required materials, producing the mixtures, preparing the surfaces on which the mixtures are placed, hauling the mixtures to the work site, and placing and compacting the mixtures. When the mix does not meet requirements, payment adjustments shall be assessed. Production of mix that is not eligible for 100 percent payment will not be allowed on a continuous basis. When test results demonstrate that payment adjustments are necessary, satisfactory mixture and compaction adjustments shall be made, or production shall be discontinued. All calculations for percent payment adjustments will be rounded to the nearest one (1) percent. Payment for removal of pavement markings will be in accordance with the applicable item. Payment adjustments will be determined in accordance with 502.14 and the QA Manual.

502.15.2 Mainline Mixtures. For all mainline mixtures, adjustments in contract unit price for roadway density as required by Table 502-5 and will be based on PWL using Tables 502-9 and 502-10 for all acceptance cores in the lot. This payment adjustment will be applied to the theoretical mainline lane quantity and contract unit price.

In addition, for mainline wearing course, a separate pay adjustment for surface tolerance based on Table 502-8 shall apply for all travel lanes based on the theoretical mainline lane quantity and contract unit price.

The theoretical quantity is computed by using the plan width, the plan thickness, and the total length of travel lanes, without exclusion areas.

502.15.3 Minor Mixtures.

502.15.3.1 Minor Shoulder Lots, > 4 Feet Wide. Adjustments in contract price for shoulder density will be based on the average density for all cores in the lot and Table 502-5.

502.15.3.2 Minor Lots with Density. Adjustments in contract price will be based on the core density for each lot in accordance with Table 502-7.

502.15.4 Payment for Tack. Tack coat as required in 502.07.2.2 "Applying Tack Coat" will be considered incidental to the 502 item. If the engineer adjusts the application rate of tack coat from that specified by the contract document, payment for the asphalt mixture will be increased or decreased based on the difference in the applied quantity of asphalt emulsion shown on paid invoices (total of charges). The contractor shall provide copies of paid invoices for this determination. Apply 95 percent payment to

the 502 item when the tack coat rates do not meet the application rate as allow by the engineer.

502.15.5 Payment Adjustment for Asphalt Cement. A minimum payment adjustments of 10 percent of the 502 item will apply to mixtures that do not meet specification but are within one grade of the specification. Asphalt that exceeds one lower grade difference in specification will be subject to 50 percent payment reduction or removal at the discretion of the Chief Engineer.

502.15.6 Payment Adjustment for Surface Tolerance.
Payment adjustment will be in accordance with 502.12.7
Apply a percent payment adjustment for quantity of tons represented in each lane of the mainline wearing course. This pay adjustment is in addition to the pay adjustments for density as described in 502.15.2. For mainline wearing course, a separate pay adjustment for surface tolerance measured on the mainline wearing course based on Table 502-8 shall apply. Apply the adjustment to the theoretical lane quantity and contract unit price.

502.15.7 Payment for Erected Stringline. When the use of an erected stringline is not specified, but directed by the engineer, an additional payment of $3500 per contract plus $0.25 per linear foot will be made for mixtures placed by the erected stringline method. When the use of an erected stringline is specified, no additional payment will be made.

Payment will be made under:

Item No.	Pay Item	Pay Unit
502-01	Asphalt Concrete	Ton
502-02	Asphalt Concrete	Cubic Yard
502-03	Asphalt Concrete, (Inches Thick)	Square Yard
502-04	Asphalt Concrete (SMA) Wearing Course	Ton

Table 502-4
Plant Produced Asphalt Mixture Requirements and Tolerances

	REQUIREMENTS FOR EXTRACTED ASPHALT CEMENT AND AGGREGATE GRADATION					
U.S. (Metric) Sieve % Passing	½ inch SMA	½ inch Nominal	¾ inch Nominal	1 inch Nominal	1.5 inch Nominal	Mix Tolerance[1]
2 inch	—	—	—	—	100	±4
1 1/2 inch	—	—	—	100	90-100	±4
1 inch	—	—	100	90-100	89 Max.	±4
3/4 inch	100	100	90-100	89 Max	—	±4
1/2 inch	90-100	90-100	89 Max	—	—	±4
3/8 inch	75 Max.	89 Max.	—	—	—	±4
No. 4	24-34	—	—	—	—	±4
No. 8	16-28	29-58	26-49	23-45	19-41	±3
No. 16	—	—	—	—	—	±2
No. 30	12-25	—	—	—	—	±2
No. 50	11-22	—	—	—	—	±2
No 100	—	—	—	—	—	±2
No. 200	7-13	4.0-10.0	3.0-8.0	2.0-7.0	1.0-6.0	±0.7
Extracted Asphalt, %	6.0 min.	—	—	—	—	±0.2
Mix Temperature		—	—	—	—	±25°F

[1]Upon validation of the JMF, the validation averages will be used for JMF target values.

Table 502-5

Asphalt Pavement Requirements

Density, Min. % of Theoretical Maximum Specific Gravity, AASHTO T 209 Method C	
Mainline, SMA	93.5
Mainline	92.0
Minor with density ref, 502.10.2.2 “Roadway lot,” patching, and widening > 2.5-feet	90.0

Surface Tolerance Variation	Longitudinal[1] inches	Transverse[2,3] inches	Cross Slope[2,3] inches [%]	Grade[3,4] inches
Mainline Wearing Courses, Category A, B	N/A[5]	1/8	3/8 [0.3]	1/2
Mainline Wearing Courses, Category C	N/A[5]	1/4	1/2 [0.4]	1/2
Mainline Wearing Courses, Category D	1/2	1/2	3/4 [0.6]	3/4
Mainline Binder Courses	1/4	1/2	3/4 [0.6]	3/4
Minor Mixes[6]	3/8	3/8	3/4 [0.6]	3/4
Bike Paths, Detour Roads and Parking Lots	1/2			
Shoulder, Ramps < 300’	1/2			

[1] See 502.12.2.
[2] Based on 10 feet, using 10-foot static straightedge and static or electronic level.
[3] See 502.12.3.
[4] Applicable only when profile grade is specified.
[5] Mainline wearing and binder are measured with inertial profiler, see 502.12.
[6] Except bike paths, detour roads, parking lots, and shoulders.

Table 502-6[1]
Asphalt Concrete General Criteria

Nominal Max., Size Agg.	0.5 inch (12.5 mm)			0.75 inch (19 mm)			1.0 inch (25 mm)				1.5 inch (37.5 mm)	SMA
Type of Mix	Incidental Paving[2,9]	Wearing Course		Wearing Course	Binder Course		Binder Course		Base Course[9]	ATB[8,9]	Base Course[9]	Wearing
Level[3]	A	1	2	2	1	2	1	2	1	1	1	2
Coarse Agg. Angularity, % Crushed, (Double Faced) + No. 4	55	75	95	95	75	95	75	95	75	75	75	98
Fine Agg. Angularity, Min. % - No. 8	40	40	45	45	40	45	40	45	40	40	40	45
Flat and Elongated Particles, % Max. (5:1)	10											
Sand Equivalent, Min. % (Fine Agg.) - No. 4	40	40	45	45	40	45	40	45	40	40	40	NA
Natural Sand - Max. %	NA	15		15			15			25	25	0
Asphalt Binder		Table 502-2, (3% minimum for Asphalt Treated base (ATB), 6% min for SMA)										
Friction Rating[3]		Table 502-3										
RAP, Max. % of Mix[4]	20	15	15	15	20	20	20	20	30	30	30	0
	Compacted Mix Volumetrics [4]											
VMA, Min. %[5]	13.5	13.5	13.5	12.5	12.5	12.5	11.5.	11.5	11.5	n/a	10.5	16.0
Air Voids, %[6]		(2.5-4.5); (no limit for ATB)										
VFA, %[6]		(69-80); no limit for ATB										
$N_{initial}$ 90% max.[7] (Gyrations)	7	7	7	7	7	7	7	7	7	n/a	7	7
N_{design} 96.5±1 % (Gyrations)	55	55	65	65	55	65	55	65	55	30	55	65
N_{max} 98 % max. (Gyrations)	90	90	105	105	90	105	90	105	90	n/a	90	65
LWT, max. rut-design, mm @ # passes, @ 50^{0}C	10 @ 10,000	10 @ 20,000	6 @ 20,000	6 @ 20,000	10 @ 20,000	6 @ 20,000	10 @ 20,000	6 @ 20,000	12 @ 20,000	10 @10,000	12 @ 20,000	6 @ 20,000
Dust/Effective Asphalt Ratio, %	0.6 – 1.6											
SCB, min, Jc, KJ/m2 @ 25^{0}C	All mix design level 1 must meet minimum 0.5 Jc , All mix design level 2 must meet minimum 0.6 Jc.											
Design Lift Thickness, inch[10]	2.0-	1.5–2.0		1.5–2.0	2.0–3.0		2.5–4.0		2.5+	3.0+	4.0+	1.5-2.0

[1]See also Table 1003-1 Asphalt Aggregate Properties.

[2]May be used for airports, bike paths, crossovers, curbs, driveways, guardrail widening, islands, joint repair, leveling, parking lots, shoulders, turnouts, and other incidental items approved by the engineer. (May be used as a standard roadway mix for local governments.)

[3]Mixtures shall meet the friction rating requirements in Table 502-3 for travel lane wearing courses with ADT > 7000,
[4]Maximum 20% RAP will be allowed in all shoulder wearing course mixtures. RAP will not be allowed for airports. Five (5) % additional RAP will be allowed in all mixes except for airports and SMA when RAP stockpile is pre-screened on a 1-inch scalping screen.
[5]Air voids, VMA, VFA, % G_{mm} @ $N_{initial}$, and % G_{mm} @ N_{design} are determined on samples compacted to N_{design}; The parameter of percent G_{mm} @ N_{max} is determined on a sample compacted to N_{max}.
[6]Air voids mix design target is a 3.5%, Mix design minimum VFA is 72.0%; Mix design minimum VFA for PG82-22rm is 75.0% and 71% for 25 mm NMS mixtures
[7]For Level 1 mixtures, $N_{initial}$ shall be 91.0% max. For Level A mixes, $N_{initial}$ shall be 92.0% max.
[8]Asphalt Treated Base (ATB) may be used for patching of base material, for shoulder <3500 ADT and maintenance widening; when used achieve average density of 90% of G_{mm} as measured per minor mix table.
[9]Semicircular Bend Test (SCB) is not required for Level A, Base Course, or ATB mixtures.
[10]Absolute minimum of lift thickness across width equal to 1/2 inch lower than minimum lift thickness.

Table 502-7
Payment Adjustment Schedule for Minor Mixture[1]

Parameter[2]	Percent of Contract Unit Price/Lot		
	100	90	50 or Remove[3]
Average Roadway Density, % G_{mm}	≥ 90.0	89.9 to 88.1	≤ 88.0

[1]See 502.11.1.3.
[2]Of the total number of cores per lot. Determine surface tolerance in accordance with Table 502-9, if required.
[3]At the option of the Chief Engineer.

Table 502-8
Payment Adjustment Schedules for Longitudinal Surface Tolerance, Maximum International Roughness Index, Inches per Mile

Percent of Contract Unit Price[1]		102%	100%	95%	80%	50% or Remove[2]
Category A [5] All Interstates, Three or more lift construction		<45	<65	65-85	86-149	150
Category B [5] Two Lift Overlays over cold plane surface and two lift overlay over improved base.		<55	<75	75-95	96 <149	150
Category C Two lift overlay over existing surface, Single-Lift Overlays with surface prep. Single Lift Overlays Over Cold Planed Surfaces or improved base		<55	<85	85-110	111- 149	150
Category D Single-Lift Overlays Over Unimproved Surfaces[3,4]		N/A	20% Improvement, or less than or equal to 65 for all other pavements	0% - 19% Improvement when initial is greater than 95	IRI Greater than Existing when initial is greater than 110	

[1] Based on total theoretical quantity.
[2] At the option of the Chief Engineer.
[3] A project with an unimproved surface has no surface preparation item.
[4] Contractor shall take IRI measurements before and after construction and shall show a minimum of 20% improvement.
[5] Remove and replace any individual 0.05-mile segment having greater than an average of 150 in/mile. Removal and replacement will be at the direction of the Chief Engineer. This note does not apply to excluded areas.

Table 502-9
Quality Index Values for Estimating Percent Within Limits (PWL)

PWL	n = 3	n = 4	n = 5 - 6	n = 7 - 9	n = 10 - 12	n = 13 – 15
99	1.16	1.47	1.68	1.89	2.04	2.14
98	1.15	1.44	1.61	1.77	1.86	1.93
97	1.15	1.41	1.55	1.67	1.74	1.80
96	1.15	1.38	1.49	1.59	1.64	1.69
95	1.14	1.35	1.45	1.52	1.56	1.59
94	1.13	1.32	1.40	1.46	1.49	1.51
93	1.12	1.29	1.36	1.40	1.43	1.44
92	1.11	1.26	1.31	1.35	1.37	1.38
91	1.10	1.23	1.27	1.30	1.32	1.32
90	1.09	1.20	1.23	1.25	1.26	1.27
89	1.08	1.17	1.20	1.21	1.21	1.22
88	1.07	1.14	1.16	1.17	1.17	1.17
87	1.06	1.11	1.12	1.12	1.13	1.13
86	1.05	1.08	1.08	1.08	1.08	1.08
85	1.03	1.05	1.05	1.05	1.04	1.04
84	1.02	1.02	1.02	1.01	1.00	1.00
83	1.00	0.99	0.98	0.97	0.96	0.96
82	0.98	0.96	0.95	0.94	0.93	0.92
81	0.96	0.93	0.92	0.90	0.89	0.89
80	0.94	0.90	0.88	0.87	0.85	0.85
79	0.92	0.87	0.85	0.83	0.82	0.82
78	0.89	0.84	0.82	0.80	0.79	0.78
77	0.87	0.81	0.79	0.77	0.76	0.75
76	0.84	0.78	0.76	0.74	0.72	0.72
75	0.82	0.75	0.73	0.71	0.69	0.69
74	0.79	0.72	0.70	0.67	0.66	0.66
73	0.77	0.69	0.67	0.64	0.63	0.62
72	0.74	0.66	0.64	0.61	0.60	0.59
71	0.71	0.63	0.60	0.58	0.57	0.56
70	0.68	0.60	0.58	0.55	0.54	0.54
69	0.65	0.57	0.55	0.53	0.51	0.51
68	0.62	0.54	0.52	0.50	0.48	0.48
67	0.59	0.51	0.49	0.47	0.46	0.45
66	0.56	0.48	0.46	0.44	0.43	0.42
65	0.53	0.45	0.43	0.41	0.40	0.40
64	0.49	0.42	0.40	0.38	0.37	0.37
63	0.46	0.39	0.37	0.35	0.35	0.34
62	0.43	0.36	0.34	0.33	0.32	0.31
61	0.39	0.33	0.31	0.30	0.30	0.29
60	0.36	0.30	0.28	0.27	0.26	0.26
59	0.32	0.27	0.25	0.24	0.24	0.23
58	0.29	0.24	0.23	0.21	0.21	0.21
57	0.25	0.21	0.20	0.19	0.18	0.18
56	0.22	0.18	0.17	0.16	0.16	0.15
55	0.18	0.15	0.14	0.13	0.13	0.13
54	0.14	0.12	0.11	0.11	0.10	0.10
53	0.11	0.09	0.08	0.08	0.08	0.08
52	0.07	0.06	0.06	0.05	0.05	0.05
51	0.03	0.03	0.03	0.03	0.03	0.03
50	0.00	0.00	0.00	0.00	0.00	0.00

Note 1: For negative values of Q_u or Q_L. PWL_U or PWL_L is equal to 100 minus the tabular PWL_U or PWL_L.
Note 2: If the value of Q_U or Q_L does not correspond exactly to a value in the table, use the next higher value.

Table 502-10
Payment Adjustment for Mainline Pavement Density (PWL)

	Percent Payment - %									
Estimated PWL	**n = 3**	**n=4**	**n = 5**	**n = 6**	**n = 7**	**n = 8 to 9**	**n = 10 to 12**	**N = 13**	**n =14 to 17**	**n = 18 and greater**
100 to 81	100	100	100	100	100	100	100	100	100	100
80	100	100	100	100	100	100	100	100	100	99
79	100	100	100	100	100	100	100	100	99	98
78	100	100	100	100	100	100	100	99	99	98
77	100	100	100	100	100	100	99	98	98	97
76	100	100	100	100	100	99	99	98	97	96
75	100	100	100	100	100	99	98	97	97	95
74	100	100	100	100	100	98	98	96	96	94
73	100	100	100	100	99	98	97	96	95	93
72	100	100	100	99	99	97	97	95	94	92
71	100	100	100	99	98	97	96	94	93	92
70	100	100	99	98	98	96	96	94	93	91
69	100	100	98	98	97	95	95	93	92	90
68	100	100	98	97	96	94	94	92	91	89
67	100	100	97	96	96	94	94	91	90	88
66	100	99	97	96	95	93	93	90	89	87
65	100	99	96	95	94	92	92	90	88	86
64	99	98	96	94	94	92	91	89	88	85
63	99	98	95	94	93	91	90	88	87	84
62	99	97	95	93	92	90	89	87	86	83
61	98	96	94	92	91	89	89	86	85	82
60	98	95	94	92	91	89	88	85	84	81
59	97	95	93	91	90	88	87	84	83	80
58	97	94	92	90	89	87	86	83	82	79
57	96	93	91	89	88	86	85	82	81	78
56	95	92	90	89	87	85	84	81	80	77
55	95	92	90	88	86	84	83	79	79	76
54	94	91	89	87	85	83	82	78	77	75
53	93	90	88	86	85	82	80	77	76	74
52	92	89	87	85	84	81	79	76	75	72
51	91	88	85	84	83	80	78	74	74	71
50	90	88	84	83	82	79	77	74	73	70
49	90	87	83	82	81	77	76	72	71	69
48	89	86	82	81	80	76	74	71	70	67

47	88	85	81	80	79	75	73	70	68	66
46	87	84	80	79	77	74	72	68	67	64
45	86	83	79	78	76	73	71	67	66	63
44	85	82	78	77	75	71	69	65	64	62
43	85	81	77	76	74	70	68	64	63	60
42	84	80	76	75	73	69	67	63	62	59
41	83	79	75	73	71	68	65	62	60	58
40	82	77	74	72	70	66	64	61	59	57
39	81	76	72	71	69	65	63	59	57	55
38	80	75	71	70	67	63	61	58	56	54
37	79	74	70	68	66	62	60	56	55	52
36	78	73	68	67	65	61	58	55	53	51
35	77	72	67	66	63	60	57	53	52	50
34	76	71	66	65	62	58	55	52	50	
33	75	70	65	63	61	57	54	50		
32	74	69	63	61	60	55	52			
31	73	67	62	60	59	54	51			
30	72	66	61	58	57	52	50			
29	71	65	59	57	56	51				
28	70	64	58	55	54	50				
27	69	62	57	54	53					
26	68	61	55	52	52					
25	67	60	52	51	50					
24	66	59	50	50						
23	64	58								
22	63	56		**50 Percent or Remove**						
21	62	54								
20	61	53								
19	60	53								
18	59	52								
17	58	50								
16	57									
15	56									
14	54									
13	53									
12	52									
11	51									
10	50									

Section 503
Asphalt Concrete Equipment and Processes

503.01 DESCRIPTION. This section specifies requirements for the certification of asphalt concrete plants and paving equipment. It includes methods and equipment for handling and storing materials, producing asphalt concrete, and transporting and placing asphalt concrete at the job site.

The Department's publication entitled "Application of Quality Assurance Specifications for Asphalt Concrete Mixtures" is hereby made a part of this specification by reference.

503.02 PLANT EQUIPMENT.

503.02.1 General: Provide equipment and processes to proportion aggregates, additives and asphalt cement in accordance with the approved Job Mix Formula (JMF). When the automatic adjustments or other critical control and shutoff devices are not functioning, do not operate the plant. Operate the plant with clean, easily accessible, and accurate thermometers, scales and meters. Immediately repair, replace, or recalibrate equipment when faulty operation is detected.

Provide a system with positive weight control of cold aggregates fed by a belt scale or other device interlocked with the asphalt measuring system to maintain required proportions of combined aggregates and asphalt cement. Heat, dry and mix aggregates with asphalt cement to produce a homogeneous mixture in which all aggregate particles are uniformly coated. Use approved methods to discard the first and last output of the plant after each interruption. Place discarded material in a separate dedicated area.

Digitally display the total quantities and the rates of production of every material used on a DOTD project.

503.02.2 Certification and Calibrations: The Department will certify plants furnishing asphalt mixtures every two years with current Departmental procedures or when any major component is repaired, replaced or upgraded. The plant owner is required to report any major component upgrades to the District Laboratory Engineer. Forward all documentation available upon request by the Department. All plant components and processes are subject at any time to inspection and approval by the District Laboratory Engineer. The plant owner is required every 90 days to have the laboratory gram scales, ignition oven scales, truck platform scales, and weight batchers tested, inspected, and calibrated by a qualified independent

scale service or the Weights and Measures Division, Louisiana Department of Agriculture and Forestry.

Within 10 working days of the 90 days plant scale recalibration, the Certified Asphalt Concrete Plant Technician, in accordance with 503.09, will verify calibration of the plant's cold feed bins, RAP feed bins, weight bridges, asphalt pump, and additives measuring devices to stated DOTD standards. The Certified Asphalt Concrete Plant Technician shall notify the DOTD certifying District Laboratory two days prior to plant calibration.

Provide a plant site laboratory conforming to 722.02 as a part of the plant facilities at no direct pay, except as modified herein. Each plant laboratory shall have a minimum floor space of 400 square feet. Laboratories are to be provided for all Quality Assurance testing. Calibrate, verify and document all laboratory equipment according to the procedures, test methods, and frequency in accordance with the current "LADOTD Laboratory Equipment Manual."

503.03 AGGREGATES

503.03.1 Stockpiles: Store aggregates at the plant site so that no intermixing, segregation, pooling of water or contamination will occur. Ensure that gradation and other properties of aggregate in stockpiles are combined in proper proportions so that the resulting combined gradation will meet the requirements of the approved JMF.

503.03.2 Cold Feed Bins: Blend and proportion all aggregates in cold feed bins.

Provide cold aggregate bins of sufficient size to store the amount of aggregates required for continuous plant operation. Provide a cold bin feed system capable of uniformly delivering the maximum number of required aggregate sizes in their proper proportion. Extend partitions between bins a minimum of 1 foot above the top of bins sufficient to prevent intermixing of aggregate sizes. Do not use the partition as part of the bin.

Calibrate the cold feed system based on the weight of bin material. Feed material from a bin through the individual orifice and bypass to a container to be weighed, or over the calibrated weigh bridge. Calibrate material from each bin separately. Calibrate with manufacturer's recommended procedures and keep records on file. The calibration process shall be part of the contractor's quality control.

Provide an automatic plant no flow alarm and shutoff to cease operations when any aggregate bin becomes empty or flow is interrupted for 20 seconds. If repeated no flow indications are evident, cease operations until continuous

flow can be maintained. Provide belt scales for conveyor systems and calibrate accordingly.

When more than one cold bin feeder is used, operate each as a separate unit. Integrate the individual controls with a master control for all materials.

503.03.3 Moisture: Make provisions for introducing the latest moisture content of the cold feed aggregates into the belt weighing system, thereby correcting the conversion of wet aggregate weight to dry aggregate weight. Digitally display dry weight of the aggregate flow in appropriate units.

503.03.4 Screens: Provide a static screen system on top of the fine sand cold feed bin system and the RAP bin system, to ensure removal of objectionable material.

When a belt scale is used, provide a vibrating scalping screen between the cold bin system discharge and the belt scale. Size the screens to remove all oversize aggregate and other objectionable material.

503.03.5 Reclaimed Asphalt Pavement (RAP): If RAP is used, provide a separate cold feed system. Include a scalping screen, bin, feeder belt, and weigh bridge which is fully integrated with the cold feed system and asphalt cement supply system. Calibrate this system in accordance with 503.02.2 and 503.03.2. Add RAP to the dryer in a location as recommended by the manufacturer so that it does not expose the material to direct flame.

503.04 ASPHALT CEMENT.

503.04.1 Working Tank: Provide an asphalt cement working tank capable of uniformly heating the material, under positive control, to the required temperature as recommended by the supplier by methods approved by the District Laboratory Engineer. Provide an asphalt circulating system of adequate size to ensure proper and continuous circulation (except while asphalt is being measured). Equip new tanks with paddle-type mixers or agitators which keep the material in motion and minimize prolonged exposure to the heating source. Maintain the proper mixing temperature of the asphalt. Heat and insulate pipelines and fittings. Provide a sampling spigot in each tank and/or the supply line. Place strainers or screens between the working tank and mixing unit to filter undesirable material. Fix a thermometer graduated in 5°F increments and having an accuracy of ±5°F in the asphalt feed line at an approved location near the discharge valve at the mixer unit to indicate the temperature of asphalt from storage.

503.04.2 Measurement: Measure the asphalt cement either by weight or volume. Ensure that all scales and meters are calibrated and

accurate to 0.5 percent. Display by percent the rate of flow of asphalt cement and the total quantity used.

503.04.2.1 Weight Measurement: Provide scales reading to the nearest pound.

503.04.2.2 Volume Measurement: Measure the asphalt cement by volume using a positive displacement pump and record in digital form to the nearest gallon. Periodically check by weight the quantity of asphalt cement delivered. Continuously display in digital form the corrected rate of asphalt cement delivery and the total quantity delivered. Ensure measurement during production is accurate to within 1.0 percent.

503.05 ADDITIVES. When additives are used, digitally display the rate of flow and the total quantity used for each. Provide meters accurate to 0.5 percent.

503.05.1 Anti-Strip: Provide a recirculation anti-strip additive storage tank producing uniform heat with an indicating thermometer at an approved location near the tank discharge point. Place a thermometer graduated in 5°F increments and having an accuracy of ±5°F at an approved point near the anti-stripping tank discharge point before the meter. Disperse anti-strip additive directly into the asphalt feed line at a location between the asphalt control valve and the end of the asphalt discharge line. Ensure that the anti-strip delivery system continuously delivers the proper amount of material and in correct proportion to the asphalt cement. This system must be equipped with a no-flow indicator, which triggers a light or alarm in the control room and an alarm in the plant lab when the anti-strip material is not flowing. If the anti-strip flow is stopped or interrupted for more than 5 minutes, discontinue production until the system is repaired. The equipment shall include a positive displacement accumulating meter which accumulates and displays materials used, and reads to the nearest 0.25 gallon. Additionally, provide a measuring dip stick and a chart correlating tank quantity with the height of anti-strip liquid.

503.05.2 Plant Blending: Equipment required to introduce crumb rubber modifier, latex, or warm mix additives is described herein. Submit a proposed plant equipment diagram to the District Laboratory Engineer for review and forward a copy to the Materials Engineer. Provide written confirmation from the equipment manufacturer that the quantity and type of mixers are appropriate for the proposed materials and flow rates. When modifying asphalt liquid binder at the contractor's plant to meet a new grade of asphalt, provide a Dynamic Shear Rheometer (DSR) for on-site quality control testing.

The District Laboratory Engineer will inspect the plant facilities.

503.05.2.1 In-Line Blending: Provide a sampling spigot in line after the point of mixing and prior to anti-stripping introduction. When modifying the binder with additives, use a totalizing meter to measure the quantity of additive in a similar manner as anti-strip.

503.05.2.2 Single Tank Batch Blending: A single tank system consists of a single blending tank used to blend crumb rubber modifiers. Provide a 20,000-gallon capacity tank or greater, which serves as both a mixing liquid tank and working liquid tank. Continuously mix the liquid and crumb rubber or other additive with paddle type mixers, auger type mixers, or shear mills to properly blend and maintain suspension. Provide a safe and easily accessible sampling spigot.

503.05.2.3 Multiple Tank System: A multiple tank system consists of a blending tank feeding into a working tank used to blend crumb rubber modifiers. The blending tank may be batch or continuous with metered feed controls to accurately maintain proper ratios of crumb rubber or other additive to neat asphalt binder liquid. Properly agitate the mixture in the working tank with paddle type mixers or auger type mixers to maintain suspension of the modified liquid. Provide a safe and easily accessible sampling spigot.

503.05.3 Warm Mix Additives: Provide necessary equipment in accordance with the manufacturer's recommendations and submit a proposed plant equipment diagram to the District Laboratory Engineer for review. Forward a copy to the Materials Engineer.

503.05.3.1 Foaming Using Water Injection: Provide an approved foamed asphalt injection system flow diagram upon request. Provide a control room indicator when using the water injection system.

503.05.3.2 Chemical Additives: Chemical additives are supplied by the liquid supplier, by mixing in the working tank, by in-line blending, or by introducing as an anti-strip. Provide a system that continuously records the quantity of additive used.

503.05.4 Mineral Filler: Proportion mineral filler separately from a bin equipped with an adjustable feed in accordance with Subsection 503.03.2, which can be accurately and conveniently calibrated and be interlocked with the aggregate. The feeder shall accurately proportion the mineral filler and provide a constant flow of material. For continuous drum mixer plants introduce the mineral filler, if used, to the mix at an approved location sufficiently in advance of the addition of the asphalt cement.

503.05.5 Hydrated Lime: When hydrated lime additive is mixed with aggregate on the belt feed, interlock and synchronize the hydrated lime

additive equipment with cold feed controls. Equip the system with an automatic no flow indicator that will automatically shut the plant down when a malfunction causes an improper supply of additive or water. Equip the hydrated lime additive system with the following:

1. A separate bulk storage bin with a vane feeder or other approved feeding system that can be readily calibrated. The system shall provide for easy sampling of additive and verification of the quantity dispensed by weight (mass). Ensure the feeder system continuously records the total amount of additive dispensed.
2. An approved spray bar, capable of spraying the composite aggregate with potable water before the addition of hydrated lime additive, when the moisture content of the composite aggregate falls below 3 percent. Ensure the approved equipment and methods consistently maintain the aggregates in a uniform, surface wet condition.
3. An approved pug mill after the cold feed system and before the belt scale.

Dispense the hydrated lime additive directly into the pug mill and composite aggregate. Uniformly blend the additive with the composited aggregate before exiting the pug mill. Obtain the District Laboratory Engineer's review of the process and equipment used for mixing the lime additive and aggregate. Ensure that no less than the required amount of additive is continuously blended with the aggregate.

503.05.6 Fibers: Use a separate feed system to accurately proportion and uniformly distribute the required quantity of mineral fibers into the mixture. Interlock the proportioning device with the aggregate feed or weigh system to maintain the correct proportions for all rates of production. Control the fiber proportion to within ±10 percent of the amount of fibers required. Equip the system with an automatic no flow indicator that will automatically shut the plant down when a malfunction causes an improper supply of fiber. For drum plants, add the fiber adjacent to the asphalt cement discharge location.

503.06 DRUM. Equip the drum with automatic burner controls that continuously agitate aggregates during heating and drying. Provide equipment capable of heating and drying aggregates to meet specifications in the necessary quantities to supply the mixing unit continuously at its operating capacity and at a specified temperature and acceptable moisture content. Slope the drum and maintain flights in accordance with manufacturer's recommendations.

Produce a uniform blend at the specified production rate, with rapid and complete asphalt coating of aggregate. As a minimum, completely coat 95 percent of the coarse aggregate particles retained on the No. 4 sieve when tested in accordance with DOTD TR 328.

Process the mixture at the temperature specified on the approved JMF and within ±25°F of the optimum mixing temperature at the discharge. Equip the drum with a thermometer or other temperature device to monitor the discharge temperature of the mix. Use temperature recording device or thermometers graduated in maximum 10°F increments with an accuracy of ±5°F and a sensitivity capable of detecting a change of at least 10°F per minute.

503.07 DUST COLLECTION SYSTEM. Return the fines from the dust collection system at a uniform and regulated rate near the asphalt cement discharge.

503.08 STORAGE AND LOADING OF ASPHALT CONCRETE MIXTURES.

503.08.1 Mix Conveyors: Transport the mix directly from plant to the storage silos or surge bin system by means of an enclosed continuous type conveyor system designed to prevent spillage and match the production rate of the plant. Deliver the mixture to the storage silo or surge bin within ±15°F of plant discharge temperature.

503.08.2 Storage Silos and Surge Bins: Use approved storage silos or surge bins for storing asphalt concrete mixtures.

Ensure that the use of storage silos or surge bins conform to the limitations on retention time, type of mixture, heater operation, bin atmosphere, bin level or other characteristics set forth in these specifications and other requirements stated in granting approval of these facilities. Affix an indicator device to each bin, visible to the loading operator, which is activated when material in the bin drops below the top of the sloped portion. Maintain mixtures above this level during production, except when the plant is not in operation.

When the mixture is placed into a silo or bins through a surge device, provide an automatic warning system to audibly warn the operator of a gate malfunction. Ensure silo or bin unloading gates are either clam shell gates operating under gravity feed or other approved gates that will not cause segregation or be detrimental to the mix.

503.08.2.1 Storage Silos: Maintain a uniform mixture temperature without localized heating. Maximum allowable overnight storage time is 18

hours, provided the silo has an oil sealed discharge gate. The Department may approve additional storage time provided test results and other data indicate that the additional storage time is not detrimental to the mix.

503.08.2.2 Surge Bins: Maintain the mixture at a temperature not less than 25°F below the optimum mixing temperature on the JMF. Do not store the mixture over night.

503.08.2.3 Loading and Sampling: Use haul trucks conforming to 503.11.

Provide a sturdy secured metal sampling platform, with protective rails, at least 30 square feet in area, and set at the proper height to easily obtain a sample. Protect the sampling platform from loaded trucks with barrier rail.

Equip the plant with an approved pressurized system capable of spraying a uniform coating of an approved asphalt mix release agent into the haul unit bed prior to loading. Do not use diesel as a mix release agent.

503.09 SCALES AND METERS.

503.09.1 Scales: Provide scales and meters accurate to ±0.5 percent of the indicated load. Design, construct and install scales and meters so that operations do not affect their accuracy. Calibrate in accordance with 503.02.2. Measure all asphalt concrete mixtures by weigh hoppers or truck platform scales to determine weight for pay.

503.09.2 Weigh Hoppers: Provide weigh hoppers to weigh the mixture or individual material components. Provide hoppers that do not leak or cause segregation. Suspend weigh hoppers from calibrated springless dial scales or load cell scales. Equip the weigh hopper with an approved automatic printer system that will print the certified tare weight of the truck, each batch weight, and total weight of mixture loaded into the truck

503.09.3 Platform Scales: Provide truck platform scales of sufficient length to weigh the entire unit transporting the mix. Weigh the truck empty to determine tare weight prior to mixture loading. Equip scales with an approved automatic printer system that will print the tare weight as well as the total weight of the unit and the mix.

503.09.4 Printers: Inform the Department in the event of a breakdown of the printing mechanism. Discontinue operations until the printer is repaired or replaced.

503.10 PAVING EQUIPMENT. The Department will inspect primary roadway equipment, including Material Transfer Vehicle (MTV), asphalt distributors, pavers, and rollers, at the start of each project. .

503.11 HAUL TRUCKS. The Department will certify haul truck and trailers with a maximum of three trailer combinations for legal payload and volume. Comply with load restrictions in accordance with 105.14. Use trucks having tight, clean, and smooth beds. Spray beds daily or as often as directed with an approved asphalt mix release agent.

Provide a canvas or vinyl cover large enough to completely cover the top and extend over the sides of the bed to protect the mixture from the weather or loss of heat. Use sufficient tie-downs to hold the cover.

Discharge the mixture in a continuous manner so the spreader apron of the paver or MTV will not be overloaded. If the truck or paver is causing surface tolerance penalties or excessive bumps, discontinue its use.

Change equipment or operations when size, speed and condition of trucks interfere with orderly paving operations.

Equip haul trucks used for asphalt surface treatments with a mechanism to provide a positive connection to the aggregate spreader.

503.12 ASPHALT MILLING MACHINE. Use an approved self-propelled milling machine or grinder equipment for milling asphalt surfacing. Provide equipment with sufficient power, traction and stability to remove the thickness of asphalt concrete necessary to provide profile grade and cross slope uniformly across the surface. Provide milling equipment capable of controlling grade or cross-slope from an erected stringline, shoe device or approved traveling reference plane that will accurately reflect the average grade of the surface on which it is to be operated and have an automatic system for controlling cross slope at a given rate. The drum shall be round and true with sufficient number of teeth to yield a uniform and fine textured surface. Equip the milling machine with means to control dust created by the cutting action. Provide adequate loading equipment to immediately remove materials cut from the surface and discharge the cuttings into a truck or on the shoulder as specified or directed.

503.13 ASPHALT DISTRIBUTORS. Provide equipment that ensures even distribution of the asphalt or asphalt emulsion across the entire pavement area at the specified rate as measured per ASTM D2995.

503.13.1 Distributors: The asphalt cement distributor shall be capable of maintaining the allowable variation from any specified rate within ±0.02 gallons per square yard. Equip the distributor with a height adjustable spray bar with spray nozzles recommended by the manufacturer. Assure that the end nozzle over the roadway edge provides a sharp line of asphalt material

parallel to the direction of travel. Ensure nozzles remain clean and free from blockage.

Provide means for an accurate and rapid determination of the control and amount of asphalt materials being applied per square yard of surface. Equip the distributor with thermometers to indicate the temperature of the material in the tank. Equip the distributor with a hand-held spray attachment for applying asphalt materials to areas inaccessible with the spray bar.

Within 12 months prior to use, calibrate the asphalt distributor in accordance with ASTM D 2995. Provide the ASTM calibration and furnish the engineer an accurate and satisfactory calibration record prior to beginning the work. The engineer may at any time require verification of calibration accuracy of the asphalt distributor in accordance with ASTM D 2995.

503.14 MATERIAL TRANSFER VEHICLE (MTV). When placing the final two lifts of asphalt concrete on the roadway travel lanes, use a material transfer vehicle (MTV) or lightweight MTV to deliver mixtures from the hauling equipment to the paving equipment, and to minimize thermal and material segregation of the hot mix asphalt concrete.

Ensure that the MTV provides additional mixing of the asphalt concrete mixtures and then deposits the mixture into the paving equipment hopper to reduce segregation and facilitate continuous production. At a minimum, provide an MTV with a high capacity truck unloading system, which will receive mixtures from the hauling equipment; a 20 ton storage bin in the MTV to continuously mix the mixture prior to discharge to a conveyor system; a discharge conveyor, with the ability to swivel, delivering the mixture to a paving equipment hopper while allowing the MTV to operate from an adjacent lane. If the weight of the MTV is determined by the engineer to cause settlement or movement in the base or sub-base, discontinue use. If the problem persists with the use of a lightweight MTV, discontinue use of the MTV. When a malfunction occurs in the MTV during lay-down operations, immediately discontinue plant operations and do not resume until the MTV malfunctions have been remedied. Mixtures in the silo (≤ 100 tons) or materials in transit may be placed.

Due to the weight of the loaded MTV, apply the following restrictions at bridge crossings:

1. Abide by posted weight limits.
2. Prior to crossing a bridge, be as near empty as possible.
3. Do not move across a bridge with any other vehicles being on the bridge.

4. Move on a bridge only within the limits of the travel lanes and do not move on the shoulders of the bridge.

5. Move at a speed no greater than 5 miles per hour when crossing a bridge.

503.14.1 Lightweight MTV: The lightweight MTV has a smaller capacity, is more fuel efficient and may be used in lieu of the MTV. Lightweight MTV's must meet all requirements of the 503.14 MTV and as modified herein. Use a Thermal Profile system in accordance with section 503.14.3 at all times when a lightweight MTV is used in lieu of the MTV. Discontinue use of lightweight MTV when thermal segregation is observed

The requirement of the 20 ton storage hopper is waived for all lightweight MTVs. The approved remixing methods for lightweight MTV's are:

1. Counter rotating augers,
2. Offset gravity transfer conveyor chute, or
3. Twin interlaced augers.

A tracked or high flotation tires are required for the undercarriage of the MTV to facilitate low ground pressure (< 55 psi).

503.14.2 Windrow Paving: Windrow paving is allowed with the use of an MTV and thermal profile system. Equip the MTV with a windrow head attachment capable of removing 95 percent of the mixture off the pavement. Use a thermal profile system meeting 503.14.3.

503.14.3 Thermal Profile System: The thermal Profile System may be used on all projects. The Thermal Profile System is a device capable of continuously recording the temperature of the full width of pavement as the mixture exits the paver with constant record of the GPS location and distance traveled. The thermal profiles system is required when using a lightweight MTV as described in section 503.13.2. The system requirements include the capability to provide the engineer with the thermal profile of every roadway sublot and roadway lot.

Mount the system with a recording device to the back of the paver. Provide capability of instant review of data on project site at any time keeping permanent record of all temperature and location data daily.

503.15 PAVERS. Use pavers with an automatic grade control device (dual grade may be required) and slope control devices for use with an approved traveling reference plane or erected stringline, as directed.

Use pavers capable of placing mixtures within specified tolerances. Use a screed or strike-off assembly to distribute the mixture over the entire

paving strip. The width of the paving strip must be acceptable to the engineer. Use screed, including screed extensions, to place mixtures that are uniform in appearance and quality. Adjust the screed assembly to provide the required cross section. Equip the screed (including screed extensions) with a heater and a vibrator.

Use a paver insert hopper, in conjunction with the MTV, with a minimum capacity of 5 tons (5 mg).

Equip pavers with hoppers adequately designed and maintained to prevent spillage. Equip pavers with augers to place the mix evenly in front of the screed, including extensions. Equip pavers with a quick and efficient steering device capable of traveling both forward and in reverse. Provide pavers capable of spreading mixes to required thickness without segregation or tearing.

For shoulder construction or other incidental applications, use modified pavers or widening machines when permitted.

Use auger assembly extensions when screed extensions in excess of 2 feet on a side are to be continuously used in the pavement operation. Extend such auger extensions to within 2 feet of the end of the screed. With approval, the use of an auger extension with screed extensions in excess of 2 feet on one side may be waived for transitions, taper sections and similar short sections.

Do not use a strike-off assembly or boxed extension for paving within the traveled way, except when approved for short irregular sections or non-typical sections.

Ensure that the vibratory screed crowns the pavement with adjustable extensions to accommodate the desired pavement profile.

503.15.1 Spray Paver: Spray pavers are designed to distribute the tack coat immediately before placing the asphalt mixture. Comply with 503.13.1 and ensure that spray pavers evenly distribute the tack coat and apply and level thin asphalt concrete concurrently at a rate of 30 to 92 feet per minute. Do not allow a wheel or other part of the paving machine to come in contact with the tack coat before the hot mix asphalt concrete wearing course is applied. Equip the spray paver to include a receiving hopper, feed system, insulated storage chamber for the tack coat, spray bar, tanks with calibrated load cells, and a variable width heated screed unit.

503.16 COMPACTION EQUIPMENT.

503.16.1 General: Provide self-propelled compaction equipment capable of reversing without backlash. Establish a rolling pattern and provide the number, type and size of rollers sufficient to compact the mixture

to the specified density and surface smoothness.

503.16.2 Steel Wheel Rollers: Use either vibratory or non-vibratory steel wheel rollers. Equip the roller with wheels that are true to round and equipped with suitable scrapers and watering devices. Design vibratory rollers for asphalt concrete compaction having separate controls for frequency, amplitude and propulsion.

503.16.3 Pneumatic Tire Rollers: Use treadless tires that are the same size and ply rating, and inflated to a uniform pressure not varying more than ±5 psi between tires. Equip tires with scrapers to prevent adhesion of mixture. The engineer may require additional cleaning and water apparatus on tires if material adhesion is detrimental to the mat.

503.16.4 Equipment for Asphalt Surface Treatments (AST).

503.16.4.1 Pneumatic Tire Rollers for AST: Use a minimum of two self-propelled rollers, weighing at least 12 tons each. Tires shall be smooth tread, of the same size and ply rating. Inflate to a minimum uniform tire pressure of 60 psi, unless damage occurs. The engineer may require a reduction in roller pressure to prevent damage to the aggregate or underlying base course. Wheels shall not wobble and shall be aligned so that the gaps between tires on one axle are covered by tires of the other axle.

503.16.4.2 Power Broom or Blower for AST: Use a power revolving broom or power blower to clean the surface of dust, dirt, mud, and loose or excess material.

503.16.4.3 Aggregate Spreader for AST: Use a self-propelled, pneumatic tire power spreader designed, equipped, and operated to spread aggregate uniformly at the designated rate within the limits of the desired roadway width. The aggregate spreader shall be capable of maintaining an allowable variation from the specified rate within ±0.5 pounds per square yard or ±0.25 pounds per square yard for expanded clay.

Calibrate the aggregate spreader in accordance with ASTM D 5624.

503.16.4.4 Vacuum-Sweeper for AST: Provide a vacuum-sweeper when there is a dusting problem, as determined by the project engineer.

503.17 MISCELLANEOUS EQUIPMENT AND HAND TOOLS. Provide power revolving brooms or power blowers that are maintained and in satisfactory working condition.

In areas that are inaccessible to conventional rollers, use satisfactory mechanical compaction equipment, or hot hand tampers. Tamping tools may be used for compacting edges.

Section 504
Asphalt Tack Coat

504.01 DESCRIPTION. Prepare and treat existing asphalt or portland cement concrete pavement surfaces with asphalt material in accordance with with these specifications and in conformity with the lines and grades shown on the plans or established.

504.02 ASPHALT MATERIALS. Use an undiluted asphalt emulsion Grade NTSS-1HM, CRS-2P, CSS-1H, SS-1H, SS-1L or PET as required by Sections 501, 502, and 507 and as listed on the Approved Materials List and comply with Section 1002.

504.03 WEATHER LIMITATIONS. Do not apply asphalt tack coat on a wet surface or when the ambient air temperature is below 40°F. For full depth patching, do not place asphalt tack coat when ambient air temperature is below 35°F.

504.04 EQUIPMENT. Provide equipment for applying asphalt material and prepare the surface to be tacked. Apply with equipment conforming to 503.13.1 and 503.15.1. A hand-held pressure nozzle may be used for tack coat application in lieu of the spray bar/tachometer combination for irregular sections or short sections of 1500 feet or less.

504.05 SURFACE PREPARATION. Clean the pavement surface by sweeping or other approved methods. Satisfactorily clean edges of existing pavements that will form joints with new pavement before tack coat is applied.

504.06 APPLICATION. Uniformly apply asphalt tack coat to a clean dry surface with no bare areas, streaks or puddles with an asphalt distributor at a rate in accordance with Table 504-1. If bleeding , ponding, or slipping are evident, these rates may be reduced to a minimum of 0.04 gallon/square yard with a minimum 0.02 gal/sq yd residual with approval of the engineer.

Table 504-1
Section 502 Asphalt Tack Coats

Surface Type	Rate[1]; Gal/Sq yd
Existing Surface Treatment[2]	0.12
New Hot Mix	0.06
Existing Hot Mix	0.09
Portland Cement Concrete	0.09
Cold Planed/Milled	0.08

[1]Rates are minimum rates of undiluted asphalt emulsion.
[2]Section 507 Asphalt Surface Treatment Type E Interlayer does not require a tack coat.

The minimum application temperature of the emulsified asphalt Grades NTSS-1HM, CRS-2P and Polymer Emulsion Tack (PET) is 160°F and Grades CSS-1H and SS-1H, is 70°F, or as recommended by the manufacturer.

Apply tack coat in such manner as to cause the least inconvenience to traffic. Traffic is not permitted on tacked surfaces prior to application of the mixture placement. The contractor will be permitted to apply the tack coat one calendar day prior to the mixture laydown for non-traffic areas. However, when tack coat has been damaged or contaminated by dirt, dust or mud, clean the surface and retack prior to the mixture laydown at no direct pay. Retack previously tacked surfaces exposed to damage or due to inclement weather at no direct pay.

504.07 MEASUREMENT. Asphalt tack coat will not be measured for payment and is considered incidental to the 501 item; however it will be measured by the gallon in-place using a calibrated stick and/or charts on level ground at the application temperature described in 504.06 for specification compliance.

504.08 PAYMENT. Payment of asphalt tack coat will be specified in 501.11, and 502.15.4 subject to the payment adjustment provisions of Section 1002 for specification deviations of the asphalt materials. The Materials and Testing Section will provide the payment adjustment percentage for specification deviations of the asphaltic materials.

Section 505
Asphalt Prime Coat

505.01 DESCRIPTION. An asphalt prime coat is used to seal newly constructed unbound and/or un-stabilized base courses. Prepare and treat a surface with asphalt material in conformance with these specifications and in conformity with lines shown on the plans or established.

505.02 ASPHALT MATERIALS. Prime coat shall be cutback asphalt Grade MC-30, MC-70, or AEP Emulsified Asphalt complying with Section 1002.

505.03 WEATHER LIMITATIONS. Do not apply MC-30 and MC-70 materials on a wet surface. Do not apply asphalt prime coat when ambient air temperature is less than 35°F in the shade.

505.04 EQUIPMENT. Provide the necessary equipment for proper construction of the work. Apply with equipment conforming to 503.13.1. A hand-held pressure nozzle may be used for prime coat application in lieu of the spray bar/tachometer combination for irregular sections or short sections of 1500 feet or less.

505.05 SURFACE PREPARATION. Shape the surface to be coated to required grade and section. Assure that the surface is free from ruts, corrugations, segregated material or other irregularities, and compact to required density. Delays in priming may necessitate reprocessing or reshaping to provide a smooth, compacted surface.

505.06 APPLICATION. Extend prime coat 6 inches beyond the width of surfacing shown on the plans. Do not apply the prime coat until the surface has been satisfactorily prepared.

Apply prime coat at the rates and temperatures shown in Table 505-1.

Table 505-1
Prime Coats

Asphalt Grade	Application Rate Gal/Sq Yd		Application Temperature °F	
	Min.	Max.	Min.	Max
MC-30	0.25	0.30	60	120
MC-70	0.25	0.30	100	180
AEP	0.25	0.30	60	120

505.07 PROTECTION. After prime coat has been applied, cure for a minimum of 24 hours before placing the mixture. Keep traffic off the surface until the prime coat has properly cured, unless otherwise permitted by the engineer.

If traffic is permitted, spread approved granular material, as directed by the engineer, over the prime coat at no direct pay.

Maintain the prime coat intact. When required, thoroughly clean the primed surface prior to the placement of mixture.

Where the prime coat has failed, clean the failed area and reapply prime coat to the unbound surface at no direct pay. When the prime coat is generally unsatisfactory, reapply prime coat to the unsatisfactory surface at no direct pay.

505.08 MEASUREMENT AND PAYMENT. Asphalt prime coat will not be measured for payment; however, payment under the contract will be subject to the payment adjustment provisions of Section 1002 for specification deviations of the asphalt materials. The Materials and Testing Section will provide the payment adjustment percentage for asphalt materials. Payment for surface preparation will be made under other items.

Section 506
Asphalt Curing Membrane

506.01 DESCRIPTION. The Asphalt Curing Membrane is used to cure treated or stabilized base/subgrade layers. Apply and maintain an asphalt curing membrane to the surface of cement or lime treated or stabilized materials in compliance with these specifications or as directed.

506.02 MATERIALS. Asphalt for curing membrane shall be an emulsified asphalt or an emulsified petroleum resin (EPR-1) complying with Section 1002. Water shall comply with 1018.01.

506.03 WEATHER LIMITATIONS. Do not apply asphalt curing membrane when the temperature is below 35°F, unless otherwise permitted by the engineer.

506.04 EQUIPMENT. Provide and maintain the necessary equipment for proper construction of this work. Apply with equipment conforming to 503.13.1. A hand-held pressure nozzle may be used for application in lieu of the spray bar/tachometer combination for irregular sections or short sections of 1500 feet or less. A gravity flow distribution system will be allowed.

506.05 SURFACE PREPARATION. Assure that the surface to which curing membrane is to be applied is free from ruts, corrugations, loose material or other irregularities.

506.06 APPLICATION. Apply the asphalt curing membrane immediately upon completion of final finishing of the final lift of the surface. Uniformly apply the emulsified asphalt curing membrane in accordance with Table 506-1. Remove extraneous material which has collected on the base before additional application of asphalt curing membrane. Maintain and repair the surface before additional applications.

Table 506-1
Asphalt Curing Membrane

Curing Membrane Type	Application Rate[1] Gal/Sq Yd	Application Temperature[2] °F
	Min.	Min.
EPR-1[3]	0.20	70
Emulsified Asphalt[4]	0.10	70

[1]Rates are minimum rates of undiluted asphalt emulsion. Dilution of the asphalt curing membrane is not permitted.
[2]Minimum application temperature or as recommended by the manufacturer.
[3]Undiluted EPR shall consist of 5 parts water and 1 part resin concentrate and comply with Section 1002.
[4]Shall comply with Section 1002.

506.07 PROTECTION. After the curing membrane has been applied, keep public and construction traffic off the surface until the curing membrane has properly cured, unless otherwise directed by the engineer. Maintain the curing membrane at no direct pay until the mixture has been placed. When traffic is permitted, apply additional curing membrane at intervals to protect and cure the surface at no direct pay.

506.08 MEASUREMENT AND PAYMENT. Asphalt curing membrane will not be measured for payment; however, payment under the contract will be subject to the payment adjustment provisions of Section 1002 for specification deviations of the asphalt materials. The Materials and Testing Section will provide the payment adjustment percentage for asphalt materials. Water will not be measured for payment.

Section 507
Asphalt Surface Treatment

507.01 DESCRIPTION. This work consists of furnishing properly distributed asphalt material followed by a uniform application of aggregate for building a riding surface, improving the surface friction of a roadway, sealing cracks in the roadway, reducing the rate of oxidation of a surface mixture, or as an interlayer to delay or reduce the occurrence of reflective cracking.

Asphalt Surface Treatment (AST), sometimes referred to as "chip seal," consists of a specified emulsion applied "cold" or polymer modified asphalt material applied "hot," at the temperature range specified in Table 507-1 for cold applications or Table 507-2 for hot applications, respectively. The application rates of asphalt material and aggregates will vary with aggregate size and existing roadway conditions but, for bid purposes only, shall meet the requirements of Table 507-1 or Table 507-2. The engineer will review the actual application rates.

507.02 MATERIALS.

507.02.1 Asphalt: Use asphalt materials complying with Section 1002 that are Approved Material List products. Comply with Table 507-1 or 507-2.

Take samples of asphalt material in the presence of the engineer's representative. The engineer's representative will immediately take possession of the samples.

507.02.2 Aggregates: Aggregates shall comply with 1003.07 and Table 1003-15. Use Approved Material List aggregates shown herein or as designated on the plans.

For hot applications and interlayer applications, precoat aggregates with a paving grade asphalt cement or a cationic emulsion. For precoated aggregates, the residual asphalt content shall be a minimum of 1.4 percent by weight of the aggregate for high absorption aggregates and 0.5 percent minimum by weight for low absorption aggregates as defined in AASHTO T84. The precoat applicator shall certify the quantities of precoat used in the process. Ensure that the precoated aggregate flows freely. The gradation requirements apply to the aggregate after precoating. Submit a gradation Certificate of Analysis with each aggregate shipment of 1000 cubic. yards or each project, whichever is less. If an emulsion is used for precoating, cure the stockpiled precoated aggregate prior to use.

507.03 EQUIPMENT. Provide asphalt distributors, pneumatic tire rollers, power brooms or blowers, aggregate spreaders, and vacuum sweepers in accordance with Section 503. Calibrate and maintain the necessary equipment for proper construction.

Keep storage tanks, piping, booster tanks, distributors, and all other equipment used in delivering, storing, or handling asphalt materials clean and in good operating condition.

507.03.1 Power Asphalt Distributor: Provide a computer operated asphalt distributor in accordance with 503.13.1.

507.03.2 Pneumatic-tire Rollers: Use self-propelled rollers, weighing at least 12 tons each in accordance with 503.16.4.1

507.03.3 Power Broom or Blower: Use a power revolving broom or power blower in accordance with 503.16.4.2.

507.03.4 Aggregate Spreader: Use a self-propelled, pneumatic tire power spreader in accordance with 503. 16.4.3.

507.03.5 Vacuum-Sweeper: Provide a vacuum-sweeper when there is a dusting problem in accordance with 503.16.4.4.

507.03.6 Haul Trucks: Provide haul trucks in accordance with 503.11.

507.04 WEATHER LIMITATIONS. Do not apply AST if any of the following conditions occur:

1. Wet or moist surface. Consider the pavement to be excessively moist when it is visibly wet or when a one square foot piece of polyethylene film condenses moisture after being tightly placed on the pavement surface for 15 minutes;
2. Rain has occurred within 24 hours (for hot applied AST only);
3. The air temperature or pavement surface temperature in the shade is less than 60°F; or
4. The air temperature is predicted by the National Weather Service to fall below 60°F within 24 hours after placement.

507.05 PREPARATION OF EXISTING SURFACE. Potholes and surface depressions will be repaired by the Department prior to the asphalt surface treatment work unless shown otherwise on the plans.

Prepare existing surface at no direct pay unless otherwise specified on the plans. Immediately prior to application of the asphalt material, clean and de-grass existing pavements over the full width to be treated. Remove raised pavement markers at no direct pay. Sweep the pavement with a power

broom or blower to remove all loose material. Clean areas not reached by the power broom or blower by hand brooming or blowing.

If used, ensure that the prime coat or curing membrane, is satisfactorily cured and maintained in accordance with Sections 505 and 506 prior to application of AST.

Obtain the engineer's acceptance of the surface prior to application of AST.

507.06 APPLICATION. After the existing surface has been properly prepared, apply asphalt material and aggregates in the amounts determined by the contractor and accepted by the engineer, and in the sequence specified herein.

Apply and spread asphalt surfacing at the temperatures and sequences given in Table 507-1 or 507-2. The quantities of material given in Table 507-1 or 507-2 may be adjusted by the engineer as field conditions warrant. The type and condition of the surface being covered will affect the required application rate of asphalt material. Use the quantities as recommended by the contractor and accepted by the engineer. Establish the actual rates during the first asphalt and aggregate application.

Before the asphalt surface treatment operation begins, calibrate and set the flow rates of the distributor and spray bar along with the aggregate spreader at a remote location offsite in a manner acceptable to the engineer. Aggregate spread rates may be adjusted by the engineer. It should be noted that after the aggregate spreader passes, the aggregate should never cover 100 percent of the roadway surface. The asphalt coated surface should be visible between the aggregates. Strike off aggregate trucks at the loading area for proper material yield measurements.

The aggregate spreader shall follow immediately behind the asphalt distributor. Make the initial pass with the rollers immediately following the aggregate spreader before the emulsion breaks.

507.06.1 Asphalt Material: In general, the rate of asphalt is increased if the road is absorbent, badly cracked, or coarse, and is decreased if the road is smooth and flushed with asphalt. Guidelines for adjusting the rate of asphalt emulsion in gallons per square yards are shown in Table 507-3.

Do not allow the length of spread of asphalt material to exceed that which can be covered by aggregate within approximately one minute.

Apply asphalt material at a uniform rate for the full width of treatment unless otherwise directed by the engineer. Keep the application of asphalt material consistently within ±0.02 gallons per square yard, otherwise stop construction and recalibrate the distributor to the satisfaction of the engineer.

Adjust the height of the spray bar and the angle of the nozzles so that individual spray fans do not interfere with each other and uniform double or triple coverage is achieved. Maintain a minimum of 100 gallons of asphalt material in the distributor during operation.

Adjust and maintain one of the special spray nozzles at the ends of the spray bar to provide a sharp edge for the asphalt material on the edge of the roadway surface being covered. When the application is less in width than the length of the spray bar, move these special nozzles to provide the specified edge lines.

When any nozzle becomes blocked during application of asphalt material, immediately stop the flow of material and clean the nozzles. When the engineer directs that application be made over less than the full width of the roadway at a time, slightly overlap adjacent treatments longitudinally. Operate the distributor along a marked edge to keep the surface treatment in proper alignment.

To secure uniform distribution at the transverse junction of two treatments, stop the distributor promptly before the flow decreases. Place building paper or other suitable material over the end of the previous application. Start the joining application on the building paper. Satisfactorily remove and dispose building paper in accordance with Section 202 or as directed. Do not burn building papers.

During application of asphalt material, do not splatter adjacent pavements, structures, and trees with asphalt material. Do not clean or discharge the distributor into ditches, borrow pits, on shoulders or along the right-of-way.

Remove excess asphalt material at the junction between distributor loads or correct satisfactorily. Areas of the surface to be treated, which are not covered with asphalt material directly from the distributor shall be covered by means of a hand-held spray attachment equipped with nozzles.

507.06.2 Aggregates: Begin aggregate spreading operations immediately after the application of the asphalt materials. Place all aggregates for hot applications in a surface dry condition. Apply aggregate material within approximately one minute after application of the asphalt material.

Uniformly spread aggregate over the full width of asphalt material with one pass of the spreading equipment and with the application being sharply defined at edges. Do not drive equipment on uncovered asphalt material. When necessary to obtain uniform coverage, hand broom the surface.

Hand spreading will be permitted in conjunction with self-propelled spreaders over areas inaccessible to spreaders. Cover asphalt material with the appropriate rate of aggregate before rolling.

507.06.3 Multiple Applications: When multiple applications are to be placed, allow a minimum of 48 hours to elapse between each successive application of emulsions. Successive hot applications can be placed without delay.

507.06.4 Interlayers: An interlayer shall be Type E as specified herein and may be placed on raw or stabilized base, on a milled surface, between lifts of asphalt, or over existing portland cement concrete pavement which will be overlaid with asphalt. Use a liquid application rate that corresponds to the proper aggregate size given in Table 507-1 or 507-2 as adjusted by the engineer to meet existing conditions. Do not place asphalt concrete on an emulsion surface treatment for a minimum of five days after application. Hot applied interlayers may be overlaid immediately.

507.07 ROLLING AND BROOMING AGGREGATE MATERIAL. Roll the surface immediately after spreading the aggregate material using a minimum of three pneumatic tire rollers. Make the first pass within approximately one minute of spreading the aggregate. Proceed rolling in a longitudinal direction, beginning at the outer edges of the application.

Make a minimum of three (3) passes over a single point. Complete all rolling within 1/2 hour after aggregate material has been spread. Immediately correct any deficiencies or damage in the aggregate material detected during rolling and reroll as directed. Continue rolling aggregate material until uniform coverage has been obtained. Roll the remaining applications as specified for the first application. Do not use a steel wheel roller.

Lightly broom or blow the surface to remove loose material. Completely remove all loose material from all roadway surfaces, including paved shoulders. If the engineer determines the amount of loose material is excessive, pick it up and remove from the project instead of brooming onto the adjacent slopes.

507.08 PROTECTION. Traffic shall not be allowed on the surface until the aggregate has been placed, rolled, and, if necessary, lightly broomed or blown. For cold applications, lightly broom or blow each treatment beginning the next morning, and continue removing loose aggregate up to final acceptance of the project, if necessary.

Distribute aggregate material over the surface to absorb any free asphalt, covering any area deficient with aggregate material, and roll as directed at

no direct pay. Do not displace embedded material during maintenance. When placing lightweight aggregate and a dusting problem occurs, use a vacuum sweeper without the sweeper engaged to remove loose aggregate. Loose aggregate material will not be permitted on the surface and shall be promptly removed.

507.09 MEASUREMENT. The quantities of asphalt material and aggregate incorporated into the completed and accepted asphalt surface treatment will be measured separately. Design quantities are based on horizontal dimensions. Design quantities will be adjusted when the engineer makes changes to adjust to field conditions. Each size aggregate will be measured by the square yard per application. Asphalt material will be measured in the distributor by the gallon at application temperatures.

507.10 PAYMENT. Payment for placement and maintenance of asphalt materials and aggregates will be made at the contract unit prices, subject to the payment adjustment provisions of Section 1002 for specification deviations of asphalt materials. The Materials and Testing Section will provide the payment adjustment percentage for asphalt materials. Payment for removal of pavement markings will be included in this pay item.

Payment will be made under:

Item No.	Pay Item	Pay Unit
507-01	Asphalt Material (type)	Gallon
507-02	Aggregate (size)	Square Yard

Table 507-1
Asphalt Surface Treatment (AST) Requirements
(Cold Application)

	Course No.	AST TYPE A		AST TYPE B		AST TYPE C	AST TYPE D			AST TYPE E (Interlayer)
Aggregate		Lightweight, Crushed Stone		Lightweight, Crushed Stone		Lightweight, Crushed Stone	Lightweight, Crushed Stone, Crushed Gravel			Crushed Stone, Crushed Gravel
Agg. Friction Rating		I, II		I, II, III		I, II, III	I, II, III, IV			I, II, III, IV
Asphalt Emulsion		CRS-2P		CRS-2P		CRS-2P	CRS-2P			CRS-2P
Application Temp. Minimum		160°F		160°F		160°F	160°F			160°F
Maximum		175°F		175°F		175°F	175°F			175°F
Number of Applications		2	1	2	1	1	3	2	1	2
Asphalt Emulsion[1] Application Rates Per Course	1	0.39	0.41	0.39	0.31	0.41	0.46	0.39	0.31	0.39
	2	0.29	—	0.29	—	—	0.36	0.29	—	0.29
	3	—	—	—	—	—	0.26	—	—	—
Aggregate size and Application Rates Per Course[2]	1	S2-0.0111	S2-0.0111	S2-0.0111	S3-0.0075	S2-0.0111	S1-0.0200	S2-0.0111	S3-0.0075	S2-0.0111
	2	S3-0.0075	—	S3-0.0075	—	—	S2-0.0111	S3-0.0075	—	S3-0.0075
	3	—	—	—	—	—	S3-0.0075	—	—	—

[1]Application rates are in gallons of asphalt emulsion per square yard of AST.
[2]Size aggregate and application rates. For example, S2 is Size 2 aggregate and 0.0111 is the application rate in cubic yards of aggregate per square yard of AST. S1A may be used in lieu of S1. Aggregate sizes for AST are shown in Table 1003-15.

Table 507-2
Asphalt Surface Treatment (AST) Requirements
(Hot Application)

	Course No.	AST TYPE A		AST TYPE B		AST TYPE C	AST TYPE D			AST TYPE E (Interlayer)
Aggregate		Lightweight, Crushed Stone		Lightweight, Crushed Stone		Lightweight, Crushed Stone	Lightweight, Crushed Stone, Crushed Gravel			Crushed Stone, Crushed Gravel
Agg. Friction Rating		I, II		I, II, III		I, II, III	I, II, III, IV			I, II, III, IV
Asphalt Cement[1]		PAC-15		PAC-15		PAC-15	PAC-15			PAC-15
Application Temp. Minimum		300°F		300°F		300°F	300°F			300°F
Maximum		360°F		360°F		360°F	360°F			360°F
Number of Applications		2	1	2	1	1	3	2	1	2
Asphalt Cement[2] Application Rates Per Course	1	0.30	0.31	0.30	0.24	0.31	0.36	0.30	0.24	0.30
	2	0.23	—	0.23	—	—	0.28	0.23	—	0.23
	3	—	—	—	—	—	0.20	—	—	—
Aggregate size and Application Rates Per Course[3]	1	S2-0.0111	S2-0.0111	S2-0.0111	S3-0.0075	S2-0.0111	S1-0.0200	S2-0.0111	S3-0.0075	S2-0.0111
	2	S3-0.0075	—	S3-0.0075	—	—	S2-0.0111	S3-0.0075	—	S3-0.0075
	3	—	—	—	—	—	S3-0.0075	—	—	—

[1]See Table 1002-11.
[2]Application rates are in gallons of asphalt cement per square yard of AST.
[3]Size aggregate and application rates. For example, S2 is Size 2 aggregate and 0.0111 is the application rate in cubic yards of aggregate per square yard of AST. S1A may be used in lieu of S1. Aggregate sizes for AST are shown in Table 1003-15.

Table 507-3
Asphalt Emulsion Adjustment Rate

Existing Surface Condition	Adjustment rate in Gallons/Sq Yd
Black, flushed asphalt	-0.1 to -0.06
Smooth, non-porous	0.00
Absorbent, porous, oxidized	0.03 to 0.09

SECTION 508

VACANT

Section 509
Milling Asphalt Pavement

509.01 DESCRIPTION. Remove asphalt concrete surfacing by milling in accordance with these specifications and in conformity with the average depth, width, grade, cross-slope and typical sections shown on the plans or as established.

509.02 EQUIPMENT. Use an approved self-propelled milling machine or grinder for milling asphalt surfacing in accordance with 503.12.

509.03 CONSTRUCTION REQUIREMENTS. Pavement surfaces resulting from milling operations shall be of uniform texture, grade and cross slope and free from loose material. Re-mill surfaces not meeting these requirements at no direct pay. Uneven, undulating surfaces will not be accepted. If ridges are excessive, the engineer may require additional milling, replacement of milling machine teeth, or other corrective action. Limit the maximum depth of milling to 2 inches per day when traffic is being maintained. Maintain a maximum 2-inch depth at milling edge of embankment at all times.

Use a minimum length 25-foot traveling reference plane on the first pass of the milling machine. A shoe device may be used on adjacent passes.

When the entire roadway width has not been planed to a flush surface by the end of a work period, resulting in a vertical or near vertical longitudinal face exceeding 2 inches in height, slope this longitudinal face as directed. Place smooth transitions at transverse joints prior to restoring to traffic by milling or by using an asphalt concrete mix. Do not use RAP. Transitions shall be a minimum length of one linear foot per 1/4 inch of the milled depth. Make provisions at drives and turnouts to maintain local traffic.

Remove asphalt concrete next to structures or in small irregular areas that cannot be removed by the milling machine by other acceptable methods.

Provide drainage of milled areas where needed by cutting through the shoulder to the ditch on the same day that adjacent milling is performed.

The milling operation shall not precede the subsequent paving operation or a shoulder stabilization operation by more than 15 calendar days. If shoulder stabilization has been performed, the paving operation shall commence 7 calendar days after the completion of the shoulder stabilization operation. Delay in starting the paving operations that causes a further

degradation in the milled surface shall be corrected by the contractor by additional milling or providing leveling at no additional pay.

Severe raveling or degradation of the milled surface that occurs shall be reported to the engineer in writing with station locations identified. The engineer will direct corrective action.

Place temporary pavement markings prior to opening the roadway to traffic in accordance with Section 713.

Haul all reclaimed asphalt pavement (RAP) material to be retained by the Department for its recycling program, or by other government entities to the storage facility indicated on the plans and stockpile as directed. The contractor may also be required to retain a specified percentage or quantity of the RAP generated by the project.

Make required joint repairs prior to milling. Complete pavement patching before milling, unless additional areas requiring patching are exposed by the milling. Perform pavement patching and joint repair in accordance with Section 510. The initial face of a butt joint can match the radius of the cold planing milling drum. No true vertical face is required.

509.04 MEASUREMENT. The Department will measure milling by the square yard of asphalt concrete surfacing satisfactorily removed. No additional measurement will be made for multiple passes required to achieve total milling depth shown on the plans. Measurement of contractor retained RAP will be by the cubic yard, theoretical in-place plan quantity, and will be credited to the Department by treating it as a negative quantity in the Schedule of Pay Items.

509.05 PAYMENT. Payment for milling of asphalt pavement will be made at the contract unit price per square yard, which includes the costs for removing, hauling and stockpiling of RAP material. The value of the RAP material retained by the contractor will be credited to the Department at the contract unit price for the retained material.

Drainage cuts placed through the shoulders, drop off transitions and transitions at transverse joints will be at no additional pay.

Payment for temporary pavement markings will be included under appropriate pay items.

Payment will be made under:

Item No.	Pay Item	Pay Unit
509-01	Milling Asphalt Pavement	Square Yard
509-02	Contractor Retained Reclaimed Asphalt Pavement	Cubic Yard

Section 510
Asphalt Concrete Pavement Patching, Widening and Joint Repair

510.01 DESCRIPTION. Use asphalt concrete to patch, widen and repair joints of existing concrete pavements, asphalt concrete pavements, and composite pavements in accordance with these specifications and in conformity with the lines, grades and typical sections shown on the plans or as directed.

510.02 MATERIALS. Use any type of asphalt concrete mixture for patching and widening listed in Section 502, other than 1/2 inch nominal maximum size mixtures. For joint repair, use Incidental Paving Asphalt Concrete (Level A) complying with Section 502. Use asphalt tack coat complying with Section 504.

510.03 EQUIPMENT. Furnish equipment that meets the specification requirements in Section 503 for the types of material used.

510.04 GENERAL CONSTRUCTION REQUIREMENTS. Remove existing surfacing and base materials by sawcutting and perform all required excavation for patching and widening. Sawcuts shall be for the full depth of the pavement along the perimeter of the pavement to be removed as marked by the engineer. Sawcuts shall be made with a diamond bladed concrete concrete saw for the full depth of patch if patching is performed on the final riding surface. Patching performed on underlying surface can be full depth sawed with a rock saw or milled out with a roto-mill or stabilizer, unless otherwise specified in plans. When through traffic is maintained, place the pavement widening material, or fill and compact open areas or trenches at the end of each day's operations. Under-thickness in excess of 1/2 inch will be corrected at no direct pay.

Excavate and dispose of the excess material beyond the right-of-way in accordance with Section 202 at no direct pay. Uniformly compact the subgrade.

For joint repair, clean contact surfaces of existing pavement and apply a thin, uniform layer of approved asphalt tack coat prior to placing asphalt mixture in the joint.

Patch and widen with asphalt concrete conforming to Section 502 except that priming of the subgrade will not be required. Clean contact surfaces of

pavement and apply a uniform layer of approved asphalt tack coat before placement of asphalt concrete. Do not overlay patches for a minimum of 5 calendar days. Spread, finish, and compact the asphalt concrete leaving the surface smooth and slightly above the edge of existing pavement. To provide lateral support, the contractor may construct temporary berms of excavated material against the outside edge of widening strips prior to rolling. If outside edges of widening strips are not edged up by the end of the work day, place super cones or drums on a maximum of 100-feet centers at no direct pay.

510.05 MEASUREMENT.

510.05.1 Patching: The Department will measure patching of pavement by the square yard or ton of existing pavement designated to be removed and replaced. Saw-cutting, removal of existing surfacing, base course, required excavation, and application of tack coat will not be measured for payment.

510.05.2 Widening: The quantities of widening for payment will be the design areas in square yards or ton as shown on the plans and adjustments thereto. Adjust design quantities if the engineer makes changes to adjust to field conditions. Design quantities are based on the horizontal dimensions shown on the plans. No measurement for payment will be made for widening placed outside the dimensions shown on the plans or established by the engineer. Required excavation, removal of existing pavement and base course, asphalt tack coat and disposal of removed material will not be measured for payment. Measure the thickness and width in accordance with DOTD TR 602.

510.05.3 Joint Repair: The Department will measure joint repair by the ton of asphalt concrete used to fill the joint. Measurement will be made in accordance with 502.14.

510.06 PAYMENT.

510.06.1 Patching: Payment for pavement patching will be made at the contract unit prices per square yard or ton, subject to the following provisions:

Payment adjustments for deficiencies in asphalt concrete and asphalt materials will be applied at 1/2 the contract unit price for pavement patching. Asphalt concrete will be subject to the payment adjustment provisions of Section 502, Table 502-7 with 4-inch cores allowed.

When the engineer orders additional thickness of patching in excess of plan thickness, payment for the additional thickness will be made as follows. When patching is on a square yard basis, the value per inch thickness will be

calculated by dividing the contract unit price per square yard by the plan thickness. Thickness of patches will be measured from the surface that exists at the time of patching. Payment for the additional thickness will be made at 50 percent of the value per inch thus determined.

When the engineer approves of an under-thickness of patching less than plan thickness, a deduction in payment will be made. The value per inch will be calculated by dividing the contract unit price per square yard by the plan thickness. This deduction per inch of under-thickness will be made at 50 percent of the value per inch.

When payment for patching is made per ton, no adjustment in unit price will be made for additional thickness or under-thickness. Any patching that develops or is required between the time of initial patching operations and the placement of the first lift of asphalt concrete will be paid for at the contract unit price. Any patching required due to base failure after placement of the first lift of asphalt concrete will be paid for at twice the contract unit price.

510.06.2 Widening: Payment for pavement widening will be made at the contract unit price per square yard or ton. Over-widths will be accepted at no additional pay. Correct under-widths by furnishing and placing additional asphalt concrete to a minimum width of 1 foot and plan thickness at no direct pay. Payment adjustments for deficiencies in asphalt concrete and asphalt materials will be applied at 1/2 the contract unit price for pavement widening. Asphalt concrete will be subject to the payment adjustment provisions of Section 502.

510.06.3 Joint Repair: Payment for pavement joint repair will be made at the contract unit price per ton.

Payment will be made under:

Item No.	Pay Item	Pay Unit
510-01	Pavement Patching	Square Yard
510-02	Pavement Widening	Square Yard
510-03	Pavement Joint Repair	Ton
510-04	Pavement Patching	Ton
510-05	Pavement Widening	Ton

PART VI—RIGID PAVEMENT

Section No. **Page No.**

601 Portland Cement Concrete Pavement 306
602 Portland Cement Concrete Pavement Rehabilitation 327

Section 601
Portland Cement Concrete Pavement

601.01 DESCRIPTION. Construct Portland Cement Concrete Pavement (PCCP) on a prepared subgrade or base course in accordance with these specifications and as shown on the plans.

Definition: Fresh concrete is being in a plastic state that has not achieved initial set.

Quality assurance requirements shall be as specified in the latest edition of the Department's publication entitled Application of Quality Assurance Specifications for Portland Cement Concrete Pavement and Structures.

601.02 MATERIALS. Provide materials as specified in the following sections and subsections.

Portland Cement Concrete	901, 1001
Aggregates	1003
Joint Materials	1005
Reinforcing Steel	1009.01
Dowel Bars	1009.03
Curing Materials	1011.01
Epoxy Resin Systems	1017
Water	1018.01
Hydrated Lime	1018.02
Non-Shrink Grout	1018.04
Geotextile Fabric	1019

Furnish either Type B or D concrete. Use the same type of concrete throughout the project, unless otherwise authorized in writing.

Account for delayed and fluctuating set times and strength gain characteristics when utilizing supplemental cementitious materials in PCCP.

601.03 CONSTRUCTION.

601.03.1 Equipment: Provide and maintain in good mechanical condition all equipment and tools for concrete batching, paving, finishing, and curing operations. Paving and miscellaneous equipment shall comply with the requirements of the appropriate subsection. Submit, at least 7 days prior to paving, a list of the proposed equipment and tools necessary for handling materials and performing the work.

Deliver all equipment to the job site at least 24 hours prior to the start of operations for examination.

601.03.1.1 Batching Plant and Equipment: See 901.09 and 901.10.

601.03.1.2 Mixers: See 901.10.

601.03.1.3 Central Plant: See 901.10.

601.03.1.4 Truck Mixers and Truck Agitators: See 901.09 and 901.10.

601.03.1.5 Non-agitator Trucks: See 901.09.

601.03.1.6 Finishing Equipment: Use slip-form paving equipment or equipment with stationary side forms to construct pavement.

601.03.1.6.1 Slip-Form Method: Place concrete with a slip-form paver that can spread, consolidate, screed, and finish the freshly placed concrete in one complete pass. Vibrators for slip form pavers shall be internal type with either immersed tube or multiple spuds and capable of consolidating the concrete for the full width and depth. Ensure that vibrators attached to the spreader or finishing machine, or mounted on a separate carriage, do not touch joints, load transfer devices, the subgrade, or side forms. Vibrate only when paver is in motion. Limit the vibration frequency from 5,000 to 8,000 vibrations per minute.

601.03.1.6.2 Stationary Side-Form Method: Use a type of screed sufficiently rigid to retain its shape to finish the surface to the specified typical section. Use wooden or metal screeds for hand finishing or mechanical twin oscillating-type roller or truss-type screeds that are at least two feet longer than the slab width. The contractor may use hand held vibrators for side form concrete placements. Maintain a minimum frequency of 4,500 vibrations per minute for the approved hand-held vibrators.

601.03.1.7 Concrete Saw: Provide saws to timely cut joints and backup saws in case of equipment failure.

601.03.1.8 Forms: Provide metal, solid, and stable forms having a depth of the specified pavement thickness with a minimum base width of 0.8 of the depth except as otherwise approved. Use flexible or curved forms for curves up to 100-foot radius. Keep forms rigid and stable during paving. Remove forms with battered top surfaces or forms that are bent or broken.

Limit the maximum variance in the top of the form to 1/8 inch in 10 feet from a true plane. Limit the maximum face variance to 3/8 inch in 10 feet. Tightly lock forms together at the ends of abutting form sections and are set securely on the grade.

601.03.1.8.1 Built-Up Forms: When approved, built-up forms may be used; however, do not exceed 2 inches of build-up. There is no limitation on the use of built-up forms or amount of build-up where the total area of pavement is less than 2,000 square yards.

601.03.1.9 Floats: Machine floats shall be composed of cutting and smoothing floats suspended from, and guided by, a rigid frame constantly in contact with side forms. Long handled floats shall have blades at least 5 feet long and 6 inches wide.

601.03.1.10 Straightedge: Use a minimum 10-foot metal static straightedge with handles approximately 3 feet longer than the paving width.

601.03.1.11 Artificial Turf Drag: The artificial turf shall be made of molded polyethylene with synthetic turf blades approximately 0.85 inch long containing approximately 7,200 individual blades per square foot. The artificial turf carpet shall be full pavement width and of sufficient size that during the finishing operation it produces 1/16 inch deep striations in the pavement surface. For pavement 16 feet or more in width, mount the artificial turf on a bridge that travels on the forms that allows control of the time and rate of texturing. If necessary, weigh the carpet to maintain intimate contact with the pavement surface.

601.03.1.12 Burlap Drag: The burlap drag shall consist of a seamless strip of damp burlap that shall produce uniform 1/16 inch deep striations in the pavement surface after dragging it longitudinally along the full width of the pavement. For pavement widths 16 feet or more, mount the drag on a bridge that travels on the forms that allows control of the time and rate of texturing.

601.03.1.13 Tine Texturing Device: The tine-texturing device shall have metal tines that produce randomly spaced grooves uniform in appearance and transverse to roadway. Tine dimensions and spacing requirements shall be in accordance with 601.03.9.8. The pavement shall have a continuously tine textured surface.

601.03.2 Mixing Limitations: Ensure adequate natural or artificial light when mixing, placing, or finishing concrete. See 105.20.

Abide by specified temperature limitations for mixing, placing, finishing, and curing. See 901.11.1 and 901.11.2.

601.03.3 Conditioning Subgrade or Base Course: Correct deficient areas in subgrade or base courses. Clean the subgrade or base course of loose material and maintain the finished subgrade in a smooth, compact, satisfactory condition. Restore disturbed areas prior to placing the pavement in accordance with 301.14. Correct all deficient areas at no direct pay.

Keep the subgrade and base course uniformly moist when placing concrete, unless specifications require a waterproof cover material.

601.03.3.1 Asphalt Concrete Base Course for PCCP: Wet the asphalt surface to minimize early-age cracking. At the time of concrete placement, ensure the surface is moist with no standing water.

Alternatively, apply a mixture to the asphalt concrete base course to prevent heat buildup in the base and bonding between the concrete pavement and base. If the

contractor elects to use a whitewash mixture, use mixtures consisting of hydrated lime and water or a wax-based white-pigmented curing compound. The whitewash mixture used and application rate shall be the responsibility of the contractor. The mixture proposed by the contractor will be subject to Department approval.

601.03.4 Preparing the Proper Grade: Trim, fill, and thoroughly compact all irregularities below the established grade with subgrade or base course material for a minimum width of 16 inches on both sides of the base of the form. Tamp or trim above-grade defects or variations to plan elevation. Maintain the finished grade in a smooth and compacted condition until placement of pavement. The Department must approve the subgrade or base course before placement of concrete.

601.03.5 Setting Forms: Ensure that the foundation under forms is firm, provides stable continuous contact, and is true to line and grade. The Project Engineer may allow shims up to 1/2 inch, not to exceed 20 percent per individual form section.

Form sections shall be tightly locked and free from movement in any direction. No settlement or springing of forms under the paving equipment is acceptable. At a minimum, place a pin at each side of every form joint. Pins shall be of sufficient length to provide adequate anchorage. Limit the maximum variance of the top form to 1/8 inch in 10 feet from a true plane. Limit the maximum face variance to 3/8 inch in 10 feet.

601.03.6 Placing and Consolidating Concrete: Deposit concrete on a surface-moist base or subgrade with a minimum of handling. Base course must be less than 120°F immediately prior to concrete placement. Place concrete continuously between transverse joints. Use appropriate tools for necessary hand spreading. Place concrete as close to joints as possible without disturbing them. Ensure workers wear footwear clean of foreign matter.

Except for concrete sawing equipment, restrict operation of mechanical equipment on the pavement until obtaining a minimum compressive strength of 3,000 psi in accordance with DOTD TR-230.

Pave adjacent lanes only after a minimum elapse of 1-day with no observable marring of the surface.

Rain protection along with hot and cold weather limitations of 901.11 shall apply.

Complete the surface finish as specified in 601.03.9.7. Texture the surface as specified in 601.03.9.8.

Cure the surface and edges as specified in 601.03.10.

601.03.6.1 Slip-Form Method: At the option of the contractor, the slip-form paving method may be used.

Place concrete with an acceptable slip-form paver designed to spread, consolidate, screed and float finish freshly placed concrete in one pass of the machine with only a minimum amount of hand finishing necessary to provide a

dense, homogeneous pavement in conformance with plans and specifications. Equip the machine with vibrators conforming to 601.03.1.6.1. Vibrate concrete for the full pavement width and depth for complete consolidation. Hold sliding forms rigidly together laterally to prevent spreading of forms.

Provide concrete of a uniform consistency exhibiting minimal bleed water and laitance. Operate the slip-form paver with as nearly a continuous uniform forward movement as possible. Coordinate mixing, delivering and placing of concrete to provide uniform progress. Concrete plants shall have sufficient mixing capacity to provide such continuous delivery of concrete to enable the paver to advance at a minimum rate of 1.5 feet per minute. If it is necessary to stop forward movement of the paver, also immediately stop the vibrator and tamping elements. If forward movement of the paver is delayed for a period, the engineer may direct fogging of fresh concrete. See 601.03.8 for construction joint requirements. Apply no outside tractive force to the machine except as controlled from the machine.

601.03.6.2 Stationary Side-Form Method: Deposit concrete as near as possible to forms and joints assemblies without disturbing the form or joint assembly.

Use vibrators to consolidate concrete against and along the faces of all forms and the length and both sides of all joint assemblies. Limit vibrator operation to 5 seconds in any one location.

601.03.7 Test Specimens: According to DOTD sampling and testing procedures, furnish concrete for casting test specimens and all required tests at no direct pay.

601.03.8 Joints, Seals, and Sealants: Saw and seal the joints according to Standard Plans CP-01.

Before preparation and sealing, verify each joint for proper width, depth, alignment.

Prior to sealing, the pavement may be opened to traffic. When poured or extruded sealants are used, allow the concrete to cure at least 7 days prior to sealing joints.

Thoroughly clean all joints immediately prior to sealing. Use sandblasting followed by an oil-free air jet to clean the faces and joint openings before sealing. Use poured or extruded sealants for sealing.

Cured sealant is required before allowing traffic on pavement. When using a poured or extruded sealant in accordance with 1005.02, close the pavement to traffic for at least one day after sealing. When elastomeric compression seals are used, allow traffic immediately following completion of sealing.

Repair any cracking, chipping, spalling, or tearing of the concrete joints at no direct pay by approved methods to the satisfaction of the engineer.

Before sealing, joints shall be free of spalls, fractures, breaks, or voids. For areas requiring minor repairs, chip back to sound concrete and repair with an approved

non-shrinking patching system in accordance with the manufacturer's recommendations, when approved by the engineer.

601.03.8.1 Poured Sealants and Preformed Joint Sealers: The following additional requirements apply to the installation of poured sealants and preformed joint sealants complying with 1005.02, 1005.03, and 1005.06.

601.03.8.2 Hot Poured Rubberized Asphalt Sealants:

601.03.8.2.1 Joint Preparation: Thoroughly clean joints by sandblasting to remove concrete curing membrane, laitance and other foreign matter from the joint. Upon completion of sandblasting, clean and dry the joint and adjacent areas of all foreign matter.

601.03.8.2.2 Application: Install poured sealants complying with 1005.02.1 in accordance with the following requirements.

Do not install the sealant until joint verification for cleanliness, dimensions, and alignment. Seal the joint without formation of entrapped air or voids. Air temperature at the time of installation shall be at least 50°F and rising.

Furnish a mobile, heated, double-walled agitator type kettle with suitable oil medium in the outer space for heat transfer capable of maintaining a sealant temperature of 380°F to 410°F. Provide easy access to kettles to facilitate cleaning. Thoroughly clean kettles of foreign substances or previously used compounds and flush daily with flushing oil. Provide this equipment with an automatic continuous temperature-recording chart for constant kettle temperature surveillance. Provide a direct connecting pressure type-extruding device with nozzles shaped for insertion into the joint. Application equipment shall recirculate sealant material in the inner kettle when not in use and shall be capable of filling the joint with sealant material free of voids or entrapped air. The applicator shall be subject to approval.

601.03.8.3 Preformed Elastomeric Compression Seals: Preformed elastomeric compression seals shall comply with 1005.03. When using a pumped adhesive-lubricant material, allow a maximum of 30 percent dilution with a material recommended by the manufacturer. Apply the adhesive lubricant just prior to installation of the seal and completely cover the seal's sidewalls.

Install seals by machine on projects requiring 3,000 feet or more of joint sealing. Do not stretch the compression seal more than 5 percent. Prior to beginning installation, cut and install, a length of seal equal to the pavement width so that stretching may be measured. Make random checks for stretching as deemed necessary by the engineer. If the adhesive lubricant has chemically set and exceeded maximum stretch limits, remove and clean the seal, re-clean the joint, and re-install the seal. There shall be no field splicing.

601.03.8.4 Silicone Sealant: The silicone sealant shall comply with 1005.02.3 or 1005.02.4. Keep the sandblasted joint faces dry and dust free prior to sealant installation. The air temperature at the time of placement shall be at least

50°F and rising. Place backer material complying with 1005.02 as shown in the plans. Prime the joint faces in accordance with the manufacturer's recommendations when a silicone sealant conforming to 1005.02.4 is used.

Force non-sag material against the joint walls by approved tooling methods that will ensure proper adhesion. No tooling is required when a self-leveling material is used.

601.03.8.5 Preformed Polyurethane Foam: Preformed polyurethane foam shall comply with 1005.06. Install preformed polyurethane foam using an approved, moisture insensitive lubricant-adhesive according to the manufacturer's instructions.

601.03.8.6 Tie Bars: For size, length, and spacing of tie bars see Standard Plans CP-01.

Place tie bars using mechanical equipment or secure them with chairs to prevent movement during concrete placement. Place tie bars perpendicular to the face of the joint, centered in the slab depth, and parallel to the finished surface. Do not place tie bars within 18 inches of contraction or expansion joints.

Do not coat tie bars with asphalt or other material or enclose in tubes or sleeves. Bend only Grade 40 tie bars at right angles against the form of the first lane constructed and straighten into final position before placement of concrete in adjacent lane. Alternatively, to bending tie bars, use approved mechanical butt splicing devices complying with 806.06.

Replace tie bars that break or show evidence of fracture upon straightening. Drill holes for tie bars approximately 1/8 inch larger than the diameter of the bar. Holes shall be clean and moisture free. Use an Approved Materials List adhesive anchor system in accordance with the manufacturer's recommendations.

601.03.8.7 Dowel Bars: Dowel bars shall have a uniformly round cross section and shall be saw-cut, smooth, and free of burrs, projections, and deformations. Dowel bars shall be plastic coated in accordance with 1009.03.

Place dowel bars in approved basket assemblies or by an approved mechanical device that is capable of accurately placing the dowels to the proper depth and alignment. Position dowel bars parallel to the pavement centerline, and parallel to the surface without any skew of individual bars.

Carefully and thoroughly consolidate the concrete around the dowel bars. When using a mechanical insertion device for placement, firmly hold dowel bars in position during the consolidation process so that the bars do not move when released in the concrete by the mechanical insertion device.

Accurately and securely, mark the transverse centerline of the in-place dowel bars prior to sawing the transverse contraction joint over the dowels.

Provide an approved expansion tube on each bar used in expansion joints. The tube shall fit the dowel bar tightly and the closed end shall be watertight. Locate dowel bar placement as shown on the plans.

With the approval of the engineer, repair all slightly damaged coatings of dowel bars by lightly oiling or greasing; otherwise replace.

601.03.8.8 Types of Joints:

601.03.8.8.1 Longitudinal Joint (Type LJ): Construct a longitudinal joint between the slabs when placing shoulder and roadway pavement slabs separately. Construct a longitudinal joint in roadway pavements placed monolithically and exceeding 15 feet in total width as shown on plans. Construct a longitudinal joint at the centerline of ramps exceeding 15 feet in width. Construct longitudinal joints with tie bars when constructing adjacent lanes separately. Ensure proper consolidation of concrete adjacent to longitudinal joints. Repair or replace any cracking, chipping, spalling, or tearing of the concrete at no direct pay by approved methods to the satisfaction of the engineer.

Form the longitudinal joint (Type LJ) in fresh concrete. Alternatively, saw hardened concrete as soon as the concrete has reached sufficient strength to support the sawing machine, and tearing and raveling of the concrete joint does not occur. Complete the sawing operation in a timely manner such that random cracking does not occur.

The joint width shall be 5/32 to 1/4 inches; joint depth shall be as specified on the plans. The joint sealant shall conform to 1005.02.1 or 1005.02.3.

Immediately prior to sealing, clean the saw cut and adjacent concrete surfaces.

Do not permit any equipment, other than the sawing machine, on the pavement during sawing operations. Provide sufficient back-up equipment at the jobsite to continue timely sawing operations in case of a breakdown.

During paving operations, clearly and accurately mark joint locations. When sawing operations are not providing proper crack control at the joint, modify sawing operations as necessary to provide proper crack control.

601.03.8.8.2 Transverse Expansion Joint (Type EJ-1 1/2 Inch): When a slip form paving method is used, construct the transverse expansion joint with a 1 1/2 inch wide sawed joint over a sleeper slab. Construct the sleeper slab from Class A1 Concrete or one of the pavement type mixes complying with Section 901. Place one layer of tarpaper equivalent to a minimum of 30 pounds per 100 square feet between the sleeper slab and the pavement. If the EJ modified joint is used, construct all the expansion joints using this method unless otherwise approved by the engineer.

601.03.8.8.3 Transverse Expansion Joint (Type EJ-4 Inch): This joint consists of a 4-inch wide joint sawed over a sleeper slab. Construct the sleeper slab from Class A1 concrete, or one of the pavement type mixes conforming to

Section 901. Place one layer of tarpaper, weighing 30 pounds per 100 square feet, between the sleeper slab and the pavement. Joint material shall comply with 1005.06.

601.03.8.8.4 Transverse Expansion Joints (Type EJ-Alternative): Replace concrete disturbed during expansion joint installation with fresh concrete and vibrate with a surface vibrator. Use a preformed elastomeric compression seal complying with 1005.03 or a silicone complying with 1005.02.

601.03.8.8.5 Wood Filler: Use wood filler conforming to 1005.01.2. Do not use a board less than six feet long. Do not use damaged wood fillers. Do not field modify wood filler.

Use dowel bars to provide adequate bracing to hold the wood filler in a vertical position. Do not permit finished joints to deviate more than 1/4 inch in horizontal alignment from a straight line. For joint fillers assembled in sections, do not allow offsets between adjacent units. Do not permit plugs of concrete within the expansion space. Seal the joint as specified.

601.03.8.8.6 Transverse Contraction Joints (Type TCJ): Transverse contraction joints shall consist of planes of weakness created in the cross section of the pavement. Install load transfer devices at these joints. Construct joints for pavement with a design speed equal to or greater than 45 mph) by sawing as specified in method 1 below. Construct by any of the following methods for joints for pavement with a design speed of less than 45 mph. For small and irregular areas, the engineer may allow methods 2 or 3.

Method 1: Construct joints by sawing after the concrete has reached sufficient strength to support sawing equipment. During paving operations, clearly and accurately mark joint locations. Saw joints to required joint width and depth in one pass. Saw to a width 5/32 to 1/4 inches and to the required joint depth. If forms prohibit sawing the transverse contraction joint for the full width of pavement, place a full-joint depth insert in the 6 inches adjacent to the forms. Conduct the sawing as soon as the concrete has hardened sufficiently to avoid tearing of the concrete and complete sawing in a timely manner to avoid random cracking.

Immediately prior to sealing joint, clean the saw cut as required.

Do not permit any equipment other than the sawing machine on the pavement during sawing operations. Provide sufficient back up equipment at the jobsite to continue timely sawing operations.

If sawing operations are not providing proper crack control, modify sawing operations, equipment, timing, and/or concrete mix as necessary to provide proper crack control.

Repair any cracking, chipping, spalling, or tearing of the concrete joints at no direct pay by approved methods to the satisfaction of the engineer.

Method 2: Install an approved removable joint former to create a joint to the required width and depth. Establish a vertical plane prior to installing the removable joint former in the fresh concrete with a T-iron. The blade of the T-iron shall have a thickness of 1/4 to 3/8 inch and a depth 1/4 inch greater than the depth of the insert. Insert the joint former in place and consolidate using a vibrating bullfloat. While concrete is workable but stiff enough to maintain joint opening, raise joint former 1/2 inch to 3/4 inch with all laitance removed alongside of insert. The joint former shall remain in place at least 12 hours. If undamaged in removal and clean of foreign material, these joint formers are reusable. Immediately prior to sealing joint, clean the joint as required.

Method 3: Install a combination joint former/sealer device as specified in 1005.04 to form a joint in fresh concrete. Establish a vertical plane prior to installing the seal insert device in the fresh concrete with a T-iron. The blade of the T-iron shall have a thickness of 1/4 to 3/8 inch and a depth 1/4 inch greater than the depth of the insert. Insert the joint former/sealer in place and consolidate using a vibrating bullfloat. The top cap of the insert shall be flush with the top surface of the pavement at the completion of all finishing operations.

601.03.8.8.7 Transverse Construction Joints (Type CJ): Construct transverse construction joints when there is an interruption of more than 1/2 hour in concreting operations. Do not construct a transverse construction joint within 5 feet of an expansion or contraction joint. If sufficient concrete is not available at the time of interruption to form a slab at least 5 feet long, remove concrete back to the preceding working joint (which must be maintained) or 5 feet behind the working joint to establish a non-working joint. Use hand vibrators to ensure proper consolidation of concrete adjacent to transverse construction joints. Transverse construction joints shall include deformed bars conforming to the size, spacing, and dimensions of the dowel bars to form a non-working joint.

601.03.8.8.8 Longitudinal Butt Joint (Type LBJ): Construct longitudinal butt joints when adding lanes of pavement. Place deformed tie bars of the specified length, size, spacing, and material perpendicular to longitudinal butt joints. Do not coat tie bars with asphalt or other material or enclose in tubes or sleeves.

Install tie bars in clean, moisture-free holes, drilled into the existing pavement approximately 1/8 inch larger than the diameter of the tie bar. Use an Approved Materials List adhesive anchor system, or an Approved Materials List Type I, Grade C epoxy resin system.

Mix the epoxy in accordance with the manufacturer's recommendations, with no fillers or extenders added. Using a caulking gun or other approved method, inject sufficient epoxy to fill the void between the tie-bar and hole. Rotate the bar while inserting to ensure complete coverage with no voids as verified by epoxy squeezing

out when the bar is inserted. Prevent bars from being disturbed until epoxy has sufficiently cured. Place epoxy using manufacturer's temperature limitations but do not apply epoxy when ambient temperature is below 40°F.

601.03.8.8.9 Transverse Butt Joint (Type BJ): Construct transverse butt joints when extending existing pavement. Place smooth dowel bars of the specified length, size, coating, spacing, and material perpendicular to transverse butt joints.

Install dowel bars in clean, moisture-free holes, drilled into the existing pavement approximately 1/8 inch larger than the diameter of the dowel bar. Use an Approved Materials List adhesive anchor system, or an Approved Materials List Type I, Grade C epoxy resin system.

Mix the epoxy in accordance with the manufacturer's recommendations, with no fillers or extenders added. Using a caulking gun or other approved method, inject sufficient epoxy to fill the void between the dowel bar and hole. Rotate the bar while inserting to ensure complete coverage with no voids as verified by epoxy squeezing out when the bar is inserted. Prevent bars from being disturbed until epoxy has sufficiently cured. Place epoxy using manufacturer's temperature limitations but do not apply epoxy when ambient temperature is below 40°F.

Establish joint sealant reservoir in accordance with plan details (See CP-01).

601.03.9 Concrete Paving: The normal sequence for paving is strike-off, consolidation, screeding, floating (use hand floats only if necessary), remove laitance, straight edging, final surface finish, and curing. Use a mechanically powered finishing machine capable of spreading, consolidating, screeding and finishing the concrete to the required pavement elevation and cross section. Mechanical roller or truss-type screeds are allowed, if approved by the engineer, for projects with: concrete pavement lane lengths of 1,500 feet or less, continuous paving lengths less than 600 feet, pavement gaps, intersections, or when side clearance is restricted.

Use work bridges or other devices to reach the pavement surface to finish, straightedge, and make corrections.

If permitted by the engineer, apply water to the surface as a fog spray with approved equipment.

601.03.9.1 Strike-Off: Strike off to achieve the specified cross section and pavement surface elevation.

601.03.9.2 Consolidation: Consolidate concrete for full width and depth of the slab to eliminate voids without segregation. Consolidate under and around load transfer devices, and other features embedded within the pavement without causing damage or misalignment. Do not operate vibrators longer than 10 seconds in one location. Do not drag handheld vibrators through the concrete nor move the concrete using the vibrator.

601.03.9.3 Screeding: Screed the concrete to achieve the specified cross section and elevation.

601.03.9.4 Floating: Float to achieve the specified grade and provide a tight-knit textured surface using an approved machine float.

When necessary following machine floating, use long-handled floats to smooth and fill open-textured pavement areas. Hand finish with bull floats only where the surface left from the paving equipment contains voids or imperfections. In general, it is best to limit hand and mechanical finishing. Adjust the concrete mixture and/or the paving equipment if excessive floating is the only method to produce an acceptable tight-knit textured surface.

Remove excess water or laitance from the pavement surface.

601.03.9.5 Straight Edging: Test the fresh concrete surface for trueness with a straightedge to achieve surface tolerance. Immediately fill depressions with freshly mixed concrete, strike off, and refinish. Trim and refinish high areas. Ensure the surface across joints meets the requirements for smoothness. Continue straightedge testing and surface corrections until the entire surface is free from deviations and the slab conforms to required grade and cross section. Make adjustments if continuous hand corrections are required.

601.03.9.6 Edging at Forms and Joints: Before tine texturing, work the edges on each side of the pavement and each side of the transverse expansion joints, Type EJ modified joints, and longitudinal construction joints, which are not sawed. Produce a well-defined, continuous radius and obtain a smooth, dense mortar finish with an approved tool. Round to the radius specified (1/4 inch approximate). Use a work bridge to work the joints. Do not disturb the pavement surface by tilting the tool during use.

Eliminate tool marks on the slab adjacent to joints without disturbing the rounding of the slab. Remove concrete on top of joint filler.

601.03.9.7 Final Surface Finish: Perform surface finishing with an artificial turf or burlap drag such that the resultant pavement surface is uniform in appearance and reasonably free from grooves over 1/16 inch deep. Provide an adjacent concrete shoulder with the same finish as the pavement. Keep the drag material free of hardened concrete. Replace drag materials that are dirty, exhibit wear, or produce unsatisfactory results.

601.03.9.8 Transverse Tine Texturing: Operate the metal tine-texturing device by approved mechanical means when texturing roadway travel lanes. If approved, the contractor may use manual methods for tine texturing of ramps, crossovers, turnouts, split slab construction or other pavement sections. Tine texturing will not be required on parking areas, drives, or other areas as designated by the engineer. Rake tines shall be steel flat wire approximately 0.025 inches thick by 0.126 inches wide by 4 to 5 inches in length, randomly spaced, at a maximum

spacing of 1 1/2 inch and a minimum spacing of 3/8 inch with no more than 50 percent of the spaces exceeding 1 inch . The width of tines shall be 1/8 ± 1/64 inch. The depth of groove produced in the concrete shall be 3/16 inch maximum and 1/16 inch minimum, measured in accordance with DOTD TR 229.

Provide the same finish on the adjacent concrete shoulders as the travel lane. Visually inspect the tine texture on the shoulders.

Correct all pavements not meeting the above requirements by retining if concrete is still fresh or by mechanical grooving if the concrete has set. Restore the texture to specified depth, width, and spacing.

601.03.10 Curing: Immediately after completing the surface finishing, uniformly spray all exposed pavement surfaces with white pigmented curing compound as soon as surface bleed water evaporates, or within one-half hour if evaporation occurs quickly. Apply curing compound to exposed edges without spraying any exposed tie bars. Do not apply curing compound during rainfall or to surfaces with standing water. Maintain curing continuously for 72 hours.

Apply curing compound under pressure by mechanical sprayers at the rate recommended by the manufacturer, but in no case less than 1 gallon per 100 square feet of surface area. Use the fully atomizing type of spraying equipment with a tank agitator. Immediately prior to and during application thoroughly mix the compound, stirring continuously by mechanical methods.

Hand spraying is allowed on small irregular widths or shapes and on surfaces exposed by form removal. Thoroughly agitate the curing compound prior to placing in the sprayer.

After application of curing compound, resulting pavement surfaces shall have a uniform appearance of a “blank white sheet of paper.” Immediately reapply additional compound to all deficient areas during the curing period.

601.03.11 Surface Tolerance (IRI):

601.03.11.1 General: This subsection outlines the measurement of surface roughness, quality control requirements, corrective actions, and acceptance criteria for PCCP. Use the International Roughness Index (IRI) to determine the amount of roughness in a measured longitudinal profile. In the direction of travel, measure the longitudinal surface profile in inches per mile and report as the IRI; all in accordance with DOTD TR 644.

601.03.11.2 Equipment: In accordance with TR 644, furnish a DOTD certified inertial profiler for quality control and acceptance testing. The inertial profiler shall measure both wheel paths simultaneously with laser height sensing equipment at a constant speed within the certified range. Due to the surface texture of PCCP, lasers with a footprint greater than a single point are recommended for accurate readings. Profilers require a current DOTD decal indicating the date of certification and the profiler’s system parameter settings.

Furnish a 10-foot metal static straightedge for quality control and acceptance testing for transverse cross slope, grade, and individual longitudinal bumps in excess of 1/4 inch in 10 feet. Additionally, bumps are not to exceed 1/4 inch in 10 feet for non-IRI pavements including but not limited to bike paths, detour roads, parking areas, sidewalks, turning lanes, turn outs, and shoulders.

601.03.11.3 Quality Control;

601.03.11.3.1 Longitudinal Smoothness: Run the certified profiler and evaluate the raw IRI data using the ProVAL "25-foot sliding baseline" to identify areas of localized roughness as defined by Table 601-2 for each wheelpath. Correct deficiencies in accordance with Table 601-2 and modify construction operations to mitigate deficiencies.

Any individual bump, which is more than 1/4 inch when tested with a 10-foot metal static straightedge, is a deficiency, which requires correction.

Have quality control IRI results available for assessment by the engineer as requested.

601.03.11.3.2 Correction of Deficient Areas: Correct areas to meet the requirements of Table 601-2 and the 1/4 inch in 10 feet straight edge bump requirement. Correct transverse, cross slope, or grade deficiencies to meet specifications. Make corrections by removing and replacing the PCCP full depth, or by diamond grinding and reestablishing surface texture and depth. Make corrections at no direct pay.

In cases involving minor dips and extreme vertical curves where grinding will not improve the surface profile, provide the engineer a justification plus a ProVAL screen shot for the area showing the 25-foot sliding baseline and corresponding 25-foot profilograph along with a request to accept as constructed.

Although omitted from corrective action, these areas still contribute to the overall IRI results.

601.03.11.4 Acceptance:

601.03.11.4.1 Longitudinal Surface Tolerance Acceptance: Measure the mainline continuously from start to finish in the direction of travel for each lane for the project's entire length. Perform the measurement under the observation and in the presence of the certified DOTD inspector. For projects that qualify for 102 percent pay, in accordance with Table 601-1 and allowable grinding in accordance with Table 601-2, the Materials and Testing Section will verify the testing results. Measure the surface tolerance for acceptance at the completion of the project after all corrective actions.

Profiler system parameter settings shall be verified before and during each run by the DOTD inspector. The inspector will witness and document the daily setup procedure and pre-operation tests performed by the contractor in accordance with the manufacturer's procedures and DOTD TR 644. A copy of the manufacturer's

setup, pre-operation, and general operating procedures for measuring surface tolerance, along with a copy of DOTD TR 644, shall be available at all times during measurement. Place a start and stop mark at the beginning and end of each travel lane so that the Department can rerun measurements.

The mainline longitudinal surface tolerance IRI specification requirements are in Table 601-1.

The Department will view the mainline PCCP's IRI raw data with the ProVAL 25-foot sliding base line to identify areas of localized roughness as defined by Table 601-2 for deficiencies. Submit to the engineer for approval the locations and screen shots for any allowed uncorrected deficiencies in accordance with 601.03.11.3.2. Although grinding for some areas may be deemed unnecessary by the engineer the measured roughness for such areas will still contribute to the total IRI for the project. In addition, the Department will check for 1/4 inch bumps at locations determined by the engineer. Correct deficiencies in accordance with 601.03.11.3.2.

A DOTD inspector will be present for the acceptance testing and will immediately receive a copy of the raw data, the "*.erd" file and any files with information about the project, the operator, the equipment, the settings, daily pre-operation results, and a copy of the IRI results via USB flash drive. In addition to the data transferred by USB storage device, provide the engineer a paper copy of the IRI report. Acceptance for the project will be in accordance with Tables 601-1 and 601-2. The Department may elect to perform and utilize independent ride quality test results for acceptance at any time.

601.03.11.4.2 Exclusions: Take the IRI acceptance measurement in its entirety, without exclusions. The Department will then review the profile report obtained for each lane. In special cases or extenuating circumstances, the engineer may isolate or exclude sections of the profile. These include the following:

- Bridges, including the approach slabs
- Curb and gutter sections, just the affected wheel path, and adjacent areas
- Manholes, catch basins, valve and junction boxes
- Intersections of a different grade
- Structures located in the roadway which cause abrupt deviations in the profile
- Ramps less than 1500 feet
- Sections where the project engineer determines that attaining smoothness is beyond the contractor's reasonable control.

The roughness in excluded areas will not be included in the total IRI used for payment purposes, but shall meet the requirements of 601.03.11.3.2 and Table 601-

2. The quantity represented by the roadway length excluded will not receive any bonus pay adjustment for surface tolerance.

601.03.12 Removing Forms: Keep the forms in place for at least 12 hours and until concrete has set sufficiently to avoid damage or prior to opening to traffic as allowed by 601.03.13. Remove forms carefully to avoid damage to pavement. Repair all superficial damage with mortar composed of one part cement and two parts fine aggregates. After removal of forms, immediately cure sides of the slab in accordance with 601.03.10.

601.03.13 Opening to Traffic: Allow traffic on the pavement after 14 days or when test specimens, complying with 601.03.7, attain a compressive strength of 3,000 psi when tested in accordance with DOTD TR 230 or a flexural strength of 550 psi when tested in accordance with AASHTO T-97. Saw initial stress relief joints and clean the pavement prior to opening to traffic. If full width joints are cut, seal before opening to traffic.

601.03.14 Acceptance Requirements:

601.03.14.1 General: Conduct sampling for DOTD testing on each pavement lot for thickness, concrete strength, and surface tolerance. Sample in accordance with the DOTD Sampling Manual. Correct all pavement that is obviously defective, or remove and replace to full depth, to the satisfaction of the engineer. Times and locations will be established by the engineer.

A pavement lot is an identifiable area of approximately 4,000 square yards paid under the same item. The final area of pavement placed is a lot if it is at least 2,000 square yards; otherwise, it will be included in the previous lot. The engineer may redefine the lot limits when sequences of construction prevent timely sampling and testing.

Consider intersections, entrances, crossovers, ramps, and any other identifiable placement as separate lots.

601.03.14.2 Concrete Strength and Thickness:

601.03.14.2.1 Compressive Strength: Determine the 28-day compressive strength and thickness of pavements from hardened cores. The Department, in accordance with DOTD TR 225, will identify random concrete core locations and determine the diameter, thickness, and strength. Cut the cores in the presence of a DOTD representative. The DOTD representative will take immediate possession of the cores for thickness and strength determinations. Notify the District Laboratory Engineer at least five days prior to the start of coring operations.

The engineer will divide each pavement lot into five equal sections. Obtain one core from each section after meeting surface tolerances. Provide additional cores required by the Department to isolate thickness, strength or other pavement deficiencies, or for recutting of deficient cores at no direct pay. Patch all core holes using an approved pavement or structural concrete mixture meeting the requirements

of Section 901. Patch the core holes immediately after coring operations. Finish the surface of the patch to match the surrounding pavement. Include the cost of patching the core holes in the bid price of the concrete coring.

When the average strength for the lot is less than 4,000 psi, the contract unit price will be adjusted in accordance with Table 601-3. When an individual core indicates compressive strength less than 3,000 psi, remove, and replace the entire deficient section with concrete of the specified quality. If the Chief Engineer determines that the concrete may be left in place, payment for the quantity of concrete represented by the deficient core will be made at 50 percent of the contract unit price. Payment for the remainder of the lot will be made in accordance with Table 601-3 based on the average compressive strength of the remaining sections.

601.03.14.2.2 Flexural Strength: The 28-day flexural strength (modulus of rupture) will only be required when specified in the contract documents. Submit a contractor-controlled curing and delivery plan to the engineer for approval.

Determine flexural strength of pavements from 6-inch by 6-inch by 20 inch cast beams. Cast and cure the beams in accordance with TR-226. The Department will randomly determine sample frequency and location for casting beams. Cast and mark the beams for identification in the presence of a DOTD representative. The Department will perform acceptance testing.

601.03.14.2.3 Thickness: Construct pavement to plan thickness. Under thickness will be subject to the payment adjustments shown in Table 601-3.

For PCCP requiring compressive strength acceptance, determine thickness from the cores.

For PCCP requiring flexural strength acceptance, use a 2-inch core to determine thickness. An alternate method may be submitted to the Department for approval.

The engineer, in calculating average pavement thickness, will consider individual measurements in excess of specified thickness by more than 0.25 inch as specified thickness plus 0.25 inch.

Replace with concrete of specified thickness areas deficient in thickness by more than 1 inch. If the Chief Engineer determines the deficient area may remain in place, payment for the quantity of concrete represented by the deficiency will be made at 50 percent of the contract unit price. Payment for the remainder of the lot will be in accordance with Table 601-3 based on the average thickness of the remaining lot segments.

601.03.14.2.4 Projects with Less Than 2,000 Square Yards of Pavement: Cored as required in 601.03.14.2.1 and 601.03.14.2.2 above, or may be accepted based on compressive strength cylinders and thickness measurements taken by the engineer**.**

601.03.14.3 Surface Tolerance: Test in accordance with 601.03.11.

601.03.14.4 Tolerances along Longitudinal Edges: Check the

pavement edge with a minimum 5-foot straight edge while the concrete is still in a fresh state. Do not allow the surface within a 6-inch width to vary more than 1/4 inch. This tolerance applies to those locations where subsequent paving (additional lanes, shoulders, turnouts, ramps, widening, curb and gutters, etc.) is to be constructed adjacent to the placed pavement. Correct any edge slump settlement before the concrete has hardened. Place fixed side forms at the slab edges when correcting deficiencies. If continuously unable to meet tolerance, cease paving operations and take corrective action.

For edges where there will be no adjacent pavement, the tolerance is 1/2 inch in 6 inches.

If unable to correct edge slump deficiencies before the concrete has hardened, correct as follows.

601.03.14.5 Edges at Longitudinal Joints: Correct by full depth removal and replacement of the pavement edge with tied concrete. Remove the pavement by full depth sawing for a width necessary to bring the pavement within the required tolerance. The maximum allowable width for removal and replacement with adjacent concrete work is 12 inches.

If the pavement surface corrections require removing more than 12 inches of the pavement edge, remove the pavement full depth for one-half of the lane width. Replace in accordance with the Department's full depth concrete pavement patching details prior to placing the adjacent pavement.

Begin and end all removals at a transverse joint.

601.03.14.6 Edges not along Longitudinal Joints: Correct by full depth removal and replacement of the pavement edge with tied concrete for a minimum width of 12 inches and to the original width at proper grade. Begin and end all removals at a transverse joint.

601.03.15 Quality Control: The contractor is responsible for all operations including but not limited to the production, transporting, placement, joint construction, surface finishing, maintenance, and curing of all concrete pavement and shoulders constructed in accordance with these specifications. Control the work to produce concrete pavement and shoulders that are uniform and conform to the plan dimensions and test requirements. Perform whatever tests are necessary to ensure the concrete pavement and shoulders comply with these specifications. Use construction methods that prevent cracking.

601.04 MEASUREMENT. The quantities for payment will be the design quantities specified in the plans and adjustments thereto. There will be no adjustments in plan quantities unless the engineer makes changes to adjust to field conditions, plan errors, or if design changes are necessary.

601.05 PAYMENT. Payment will be on a lot basis at the contract unit price per square yard, which includes furnishing and placing all materials including tie bars, dowel bars, and joint material. Payment for concrete cores taken for thickness and strength acceptance is at the contract unit price per each as described in 601.03.14.2. There will be no adjustment in the unit price for coring when there are different pavement-thicknesses specified. If the pavement does not comply with acceptance requirements, adjust unit price payments in accordance with Table 601-3. If there are payment adjustments for more than one deficiency, they are cumulative. Payment for surface tolerance (IRI) will be in accordance with 601.03.11. Grinding is not allowed to achieve incentive payment beyond meeting Table 601-2 requirements. Progressive partial payments for PCCP are at 100 percent with all IRI bonus and penalty assessments at final acceptance.

Payment will be made under:

Item No.	Pay Item	Pay Unit
601-01	Portland Cement Concrete Pavement ____ in. Thick	Square Yard
601-02	Portland Cement Concrete Pavement (Crossovers and Turnouts)	Square Yard
601-03	Portland Cement Concrete Shoulder ____ in. Thick	Square Yard
601-04	Portland Cement Concrete Coring	Each

Table 601-1[1]
Pavement Adjustment Schedule for Mainline Longitudinal Surface Tolerance, Maximum International Roughness Index, inches per mile

Percent of Contract Unit Price		102%[2]	100%	98%	50% or Remove and Replace[3]
Category I: Design Speed ≥60 mph	IRI in/mi	≤65	≤75	76-84	≥85
Category II: Design Speed ≥45 mph and <60 mph	IRI in/mi	≤75	≤85	86-94	≥95
Category III: Design Speed <45 mph	IRI in/mi	N/A	≤115	116-129	≥130

[1]Applies to each travel lane for the entire project's length.

[2]Incentive Pay Requirements:
Must equal or be less than the average IRI indicated for bonus payment.
Grinding is not allowed to achieve incentive payment but requirements for 601.03.11.3.2 must be met.

[3]At the option of the Chief Engineer.

Table 601-2[1]
Individual Wheel Path
Deficient Area Boundaries Requiring Corrective Action
Maximum International Roughness Index, inches per mile
as measured to nearest whole number

Any 25-foot Sliding Baseline		PCCP: Longitudinal Direction
Category I	IRI in/mi	≤170
Category II	IRI in/mi	≤190
Category III	IRI in/mi	≤210

[1]The contractor shall use a continuous 25-foot sliding base selected in the ProVal software to analyze and determine must grind areas of localized roughness as specified by this table. The limits for localized roughness, unless greater than that shown in the table above, must be identified and corrected, or accepted by the Project Engineer.

Table 601-3
Payment Adjustment Schedule

	Payment (Percent of Contract Unit Price/Lot)[1]			
	100	95	80	50 or Remove and Replace[2]
Deficiency in Average Thickness of 5 cores/lot, inches	0 to 0.13	0.14 to 0.25	0.26 to 0.5	Over 0.50
Average Compressive Strength, psi	≥4000	3500 to 3999	3000 to 3499	Below 3000

[1]Payment adjustment shall be cumulative.
[2]At the option of the Chief Engineer.

Section 602
Portland Cement Concrete Pavement Rehabilitation

602.01 DESCRIPTION. Repair and rehabilitate existing, aged portland cement concrete pavements. This work includes pavement grinding and texturing, retrofitting of dowel bars, full and partial depth pavement patching, cleaning and resealing or filling of longitudinal and transverse joints, cleaning and sealing of cracks, and undersealing in accordance with these specifications, plan details, and as directed by the engineer. Section 602 is not applicable to newly constructed portland cement concrete pavement.

Dispose of removed materials, including concrete pavement, outside the project rights-of-way in accordance with 202.02.

Quality assurance requirements shall be as specified in the latest edition of the Department's publication entitled "Application of Quality ".

602.02 MATERIALS. Materials for concrete pavement rehabilitation shall comply with the requirements of the appropriate subsections. The engineer must approve the materials before performing the work.

602.03 EQUIPMENT. Equipment for concrete pavement rehabilitation shall comply with the requirements of the appropriate subsections. The engineer will approve equipment and tools necessary for handling materials and performing the work. The equipment shall be at the job site sufficiently ahead of the start of operations for examination and approval.

602.04 CLEANING AND FILLING EXISTING LONGITUDINAL PAVEMENT JOINTS (≥ 2 INCH WIDTH). Remove joint sealants in longitudinal joints, two inches and wider, in existing concrete pavement and fill the joints in accordance with the plans or as directed and as follows. Clean joints and adjacent pavement surfaces of existing sealants, incompressibles and debris to the satisfaction of the engineer in accordance with the plans by sandblasting. Blow the joint dry, free of any debris by compressed air just prior to filling. The air compressor will be equipped with an approved oil and water trap. Dry the joints before filling. Fill prepared joints within 24 hours. Reclean joints that have become contaminated or dirty before filling as directed.

Fill the joints with an epoxy concrete consisting of a mixture of epoxy resin system and thoroughly dry fine aggregate. The epoxy resin system shall be Type I Grade 1 complying with Section 1017. The fine aggregate shall consist of packaged concrete or mortar sand complying with 1003.08.1. Prior to mixing, ensure that the sand is in oven dried condition. The mixture proportions of the epoxy concrete shall be one part epoxy resin system to approximately four parts fine aggregate, by dry volume. The final mix proportions shall be such that during placement the slump of the mixture will allow the material to fill all voids and be consolidated and finished. Mix the epoxy resin system and fine aggregate in equipment and by methods that produce a homogenous mixture.

Place reinforcing steel in the joint as shown on the plans. Cut the reinforcing steel at transverse joints. Establish transverse joints in the epoxy concrete by using inserts or sawing, and then sealing.

Protect existing transverse joints from intrusion of epoxy concrete. If epoxy concrete gets into the transverse joints, immediately clean the joints of epoxy concrete to the satisfaction of the engineer.

The filled joint shall remain closed to traffic until, in the engineer's opinion, the epoxy concrete and joint sealant have satisfactorily cured.

602.05 CLEANING AND RESEALING EXISTING LONGITUDINAL AND TRANSVERSE PAVEMENT JOINTS. Remove joint sealants in longitudinal and transverse joints of existing concrete pavement and reseal the joints in accordance with the plans or as directed and as follows. Clean joints and adjacent pavement surfaces of existing sealants, incompressibles, and debris in accordance with the plans to the satisfaction of the engineer. Clean joint faces by sandblasting and blow free of any debris by compressed air just prior to resealing. Make a minimum of one pass with the blasting nozzle held at an angle close to the surface [1-2 inches] along each reservoir face. The air blowing operation is to proceed in one direction (forward) to prevent recontamination of the joint. Equip the air compressor with an approved oil and water trap. Dry the joint before resealing. Reseal prepared joints within 24 hours. Reclean any contaminated joints before sealing, as directed.

Resealing materials shall comply with 1005.02.1. Install resealing materials in accordance with plan details and the manufacturer's recommendations. Use an appropriate sized backer rod material for the joint size complying with 1005.02.1. While sealing joints, seal small crushed corners, not repaired by other methods, with hot poured sealant to the satisfaction of the engineer at no direct pay.

Keep the resealed joint closed to traffic until the sealant has satisfactorily cured to tack free.

602.06 CLEANING AND SEALING CRACKS. Clean and seal longitudinal, diagonal, and transverse cracks in accordance with the plans or as directed and as follows. The minimum width of the crack to be sealed shall be 3/8-inch at the pavement surface. The engineer will designate which cracks are to be sealed.

Clean cracks by sandblast or water blast. Route cracks, less than 1/2 inch, to form a sealant reservoir approximately 1/2 inch wide by 1/2 inch deep, and blow free of sand or water by compressed air just prior to sealing. Make a minimum of one pass with the blasting nozzle held at an angle close to the surface [1 - 2 inches] along each reservoir face. Proceed in one direction (forward) with the blowing operation to prevent recontamination of the joint. Equip the air compressor with an approved oil and water trap. Keep the crack dry before sealing. Seal prepared cracks within 24 hours. Reclean any contaminated cracks before sealing, as directed. Seal cracks with a hot poured sealant complying with 1005.02.1, installed in accordance with the manufacturer's recommendations.

Keep the sealed cracks closed to traffic until the hot poured sealant has satisfactorily cured to tack free.

602.07 FULL DEPTH CORNER PATCHING OF JOINTED CONCRETE PAVEMENT. Remove and replace to full-depth, portland cement concrete pavement corner breaks at locations shown on the plans or as directed and as follows.

Remove unsound concrete within the patch area. The engineer must approve the method of removal. This approval is subject to demonstrating satisfactory performance without damage to the base course and adjacent pavement structure.

Before placing concrete, saw existing joints, within or adjacent to patch areas, to provide for the placement of fiberboard or other approved material in the joint. Extend the fiberboard for the full thickness of the pavement.

Remove deteriorated base course in the patch area, at no direct pay, and replace with concrete while patching as directed. When the engineer orders additional thickness of patching, in excess of plan thickness, payment will be made for the additional thickness in accordance with 602.17.4.

Place approved wood or metal forms or fiberboard for side forms adjacent to shoulders. A maximum 12 inches width of shoulder surfacing and base may be removed to facilitate forming; however, repair all damage to shoulder underdrain systems, and patch removed shoulder and base areas to the satisfaction of the engineer after form removal at no direct pay.

Clean concrete surfaces within the patch area of loose particles, dust, and debris. Apply a bonding grout to the existing concrete in the patch area with a stiff bristle brush just prior to placement of the new concrete. Grout shall consist of equal parts of portland cement and sand by weight with enough water to provide a stiff slurry. Continuously agitate the grout and use within 90 minutes.

Use Type B, D, or E concrete for pavement patching complying with Section 901. Allowable for use are approved set-accelerating admixtures, complying with 1011.02, at the dosage recommended by the admixture manufacturer. Place, consolidate, finish, and cure the concrete as directed.

Texture the patch surface to match the texture of adjoining pavement. If pavement is to be overlaid, only drag finish the patched surface. The finished patched surface profile shall meet a maximum 1/4 inch deviation using an approved minimum 10-foot metal static straightedge.

Immediately after finishing, apply curing compound at one gallon per 100 square feet that results in the surface looking like a blank sheet of white paper.

Saw and seal transverse joints as shown on the plans. Reestablish the longitudinal joint to match the existing longitudinal joint. Use an appropriately sized backer rod material for the joint size complying with 1005.02.1. Use a sealant complying with 1005.02.1 in accordance with the manufacturer's recommendations. Keep the patches closed to traffic until the sealants have satisfactorily cured.

Keep patches closed to traffic until standard test specimens conforming to the DOTD Materials Sampling Manual and 601.03.7 have attained a compressive strength of 3000 psi when tested in accordance with DOTD TR 230. Cure and transport cylinders to be tested in 24 hours or less in an insulated container without artificial heating until time of testing. Only with the Chief Construction Engineer’s approval, can the maturity method be utilized for compressive strength determination.

602.08 FULL DEPTH PATCHING OF JOINTED CONCRETE PAVEMENT.

Remove and replace to full-depth portland cement concrete pavement, with proper joints, at locations shown on the plans or as directed and as follows. Coordinate construction activities to limit lane closures. If pavement has been removed and cannot be replaced during daylight hours, temporarily backfill the areas with aggregate acceptable to the engineer and keep the lane closed to traffic.

Perform saw cutting with a concrete saw for the full depth of the pavement along the perimeter of the pavement as marked by the engineer. Repair spalls in the existing pavement resulting from pavement removal in the patch area by extending the removal limits to include the spalled areas. Make pavement removal for spall repair at the full patch width. Repair of the spalled areas shall be at the contractor's expense. Reduce the pavement to appreciable sized pieces by making additional saw cuts or by using hand held jackhammers or an approved resonant pavement-breaking device to reduce the pavement to pieces. Regardless of method, ensure there is no damage to the existing base course.

Remove the resulting pieces by lifting lugs or other approved methods that will not damage the existing base course or the remaining edges. This approval will be

subject to the contractor demonstrating satisfactory pavement removal without damage to the base course.

Remove deteriorated base course in the patch area and replace with patching concrete or as directed by the engineer.

Remove base course in the patch area damaged by the contractor and replace with concrete as directed at no cost to the Department. When the engineer orders additional thickness of patching in excess of plan thickness, payment for the additional thickness will be made in accordance with 602.17.5.

Drill holes for dowel bars and tie bars into vertical faces of the adjoining pavement, and install bars with an Approved Materials List adhesive anchor system as shown on the plans or as directed. Lightly oil or grease the free end of the dowel bar.

Place approved wood or metal forms for side forms adjacent to shoulders. A maximum 12 inches width of shoulder surfacing and base may be removed to facilitate forming; however, repair all damage to shoulder underdrain systems, and patch removed shoulder and base course areas to the satisfaction of the engineer after form removal at no direct pay.

Use Type B, D, or E concrete for pavement patching complying with Section 901. Allowable for use are approved set-accelerating admixtures, complying with 1011.02, at the dosage recommended by the admixture manufacturer. Place, consolidate, finish, and cure the concrete as directed.

Texture the patch surface to match the texture of adjoining pavement. If pavement is to be overlaid, only drag finish the patched surface. The finished patched surface profile shall meet a maximum 1/4 inch deviation using an approved minimum 10-foot metal static straightedge.

Immediately after finishing, apply curing compound at one gallon per 100 square feet that results in the surface looking like a blank sheet of white paper.

Keep patches closed to traffic until standard test specimens conforming to the DOTD Materials Sampling Manual and 601.03.7 have attained a compressive strength of 3000 psi when tested in accordance with DOTD TR 230. Cure and transport cylinders to be tested in 24 hours or less in an insulated container without artificial heating until time of testing. Only with the Chief Construction Engineer's approval, can the maturity method be utilized for compressive strength determination.

Saw and seal transverse joints as shown on the plans. Reestablish the longitudinal joint to match the existing longitudinal joint. Use an appropriate sized backer rod material for the joint size complying with 1005.02.1. Use a sealant complying with 1005.02.1 in accordance with the manufacturer's recommendations. Keep the patches closed to traffic until the sealants have satisfactorily cured.

In areas where a bond breaker is required in longitudinal joints, use a 6-mil (nominal) polyethylene sheet or approved equal bond breaker. Place the bond breaker to the full thickness of the slab.

Base acceptance and payment for full depth patching of jointed concrete pavement on a lot basis at the contract unit price per square yard, adjusted in accordance with the following provisions. A lot will be a completed section or an identifiable pour completed in one day.

Base the acceptance and payment for each lot on the compressive strengths of Table 601-3.

602.09 High Early Strength (HES) Concrete Pavement Full and Partial Depth Patching. For early opening to traffic, attain a minimum compressive strength of 3,000 psi within the lane closure time frame specified in the plans, contract documents or where construction conditions merit. Verify by trial batch that the proposed HES concrete mix achieves a minimum compressive strength of 3000 psi within the specified time frame. Mold and cure compressive strength specimens in accordance with DOTD TR 226 and test in accordance with DOTD TR 230. Cure and transport cylinders to be tested within 24 hours or less in an insulated container without artificial heating until time of testing. Use curing boxes for the molded cylinders to emulate the strength gain of the in-place concrete. Only with the Chief Construction Engineer's approval, can the maturity method be utilized for compressive strength determination.

Do not allow traffic on the high early strength concrete pavement until it obtains a minimum compressive strength of 3,000 psi.

Use a rapid setting patching material conforming to the AML or a Type B, D, or E concrete mix design, which conforms to the following requirements:

1. Allowable for use is Type III cement. For partial depth patching, use the same type of coarse aggregate, gravel or crushed stone, as the existing in-place PCCP.
2. Follow the manufacturer or supplier's recommendations on mixing and placing high early strength concrete pavement.
3. Do not use chloride-type accelerating admixtures.

Due to the rapid setting properties of the concrete, place the concrete as continuously as possible to eliminate cold joints. Promptly finish the concrete as specified in 601.03.9. Immediately after finishing, apply curing compound at one gallon per 100 square feet that results in the surface looking like a blank sheet of white paper.

Texture the patch surface to match the texture of adjoining pavement. If pavement is to be overlaid, only drag finish the patched surface. The finished patched surface shall meet the surface finish requirements of 601.03.11 except the

finished patched surface profile shall meet a maximum 1/4 inch deviation using an approved minimum 10-foot metal static straightedge.

602.10 PARTIAL DEPTH PATCHING OF JOINTED CONCRETE PAVEMENT. Patch partial depth concrete pavement in accordance with plan details and as follows.

602.10.1 Patch Preparation. Perform pavement cutting with a concrete saw along the perimeter of the pavement as marked by the engineer. Make the saw cut to the depth of unsound concrete, as determined by the engineer, but not less than 2 inches or more than 6 inches. If the depth of unsound concrete exceeds 6 inches, place a full-depth patch under that pay item. Remove unsound concrete within the patch area with approved pneumatic tools having a maximum weight of 30 pounds.

Clean the concrete surfaces within the patch area of loose particles, oil, dust, traces of asphalt concrete, joint material, and other contaminants by sandblasting before patching. Remove all sandblasting residue prior to placement of the bonding agent and patching material.

Reestablish and maintain transverse and longitudinal joints prior to placing repair material. Place fiberboard or other approved joint-forming material in the joint to the depth of the joint. Match and maintain all joints adjacent to patched areas in working condition.

602.10.2 Patching Material. Use either portland cement concrete or epoxy mortar for partial depth patching of concrete pavement.

When portland cement concrete is used for patching material in partial depth patches, the concrete will be accepted on a lot basis at the contract unit price per square yard. Base the acceptance and payment for each lot on the compressive strengths of Table 601.3.

602.10.2.1 Portland Cement Concrete. Use Type E portland cement concrete for pavement patching complying with Section 901, except use only a coarse aggregate Size 89M or 67 aggregate gradation complying with Table 1003-18. Use coarse aggregate DOTD Size 89M or ASTM C-33 Size 8 aggregate gradation for patches less than 2 ½ inches in depth. Use only non-chloride type accelerators, which may be added at the jobsite or plant.

Add steel fibers complying with ASTM A-820, Type I, or II to the mix. Use fibers with a nominal length not less than 1 inch or no greater than 1 1/2 inches. Use deformed fiber with an aspect ratio not less than 40 or no greater than 60. Provide 85 to 90 pounds of steel fibers per cubic yard of concrete. The fibers shall remain packaged until they are included in the mix. Ensure that fibers are uniformly distributed throughout the mix without any clumping. Continue mixing at the manufacturer's recommended mixing speed for at least l minute after addition of

the fibers. Mixer capacity prior to the addition of the fibers shall not exceed 80 percent.

602.10.2.2 Epoxy Mortar. Use an epoxy mortar for patching material that consists of a mixture of epoxy resin system and thoroughly dry fine aggregate. Use a Type I Grade 2 epoxy resin system, light gray in color, complying with Section 1017. Mix the epoxy components in strict compliance with the manufacturer's mixing recommendations before adding the fine aggregate to the mixture. Discard any epoxy mortar that begins to generate appreciable heat or is not in accordance with manufacture's recommendations. Use a prepackaged oven-dried construction sand as the fine aggregate. Prior to mixing, assure that the sand is in oven dry condition. The mixture proportions of the epoxy mortar shall be one part epoxy resin system to approximately three parts construction sand, by dry volume. Proportion the final mix such that during placement the slump of the mixture will allow the material to fill all voids, facilitating consolidation and finish. Store, proportion, and blend all ingredients of the epoxy mortar to yield a uniformly combined and homogenous mix.

602.10.3 Construction Requirements.

602.10.3.1 Portland Cement Concrete. Clean concrete surfaces within the patch area of loose particles, dust and debris, and apply a bonding grout to the existing concrete in the patch area with a stiff bristle brush just before placement of the new concrete. Use grout consisting of equal parts of portland cement and sand by weight with enough water to provide a stiff slurry. Continuously agitate the grout and use within 90 minutes.

Place, consolidate, finish, and wet cure the concrete as directed.

The patch surface shall conform to the existing surface; texture to match the texture of adjoining pavement. The finished patched surface shall meet the surface finish requirements of 601.03.11 except the finished patched surface profile shall meet a maximum 1/4 inch deviation using an approved minimum 10-foot metal static straightedge.

After placement, consolidation and curing of the concrete, saw and seal transverse joints as shown on the plans with a sealant complying with 1005.02.1 in accordance with the manufacturer's recommendations. Reestablish the longitudinal joint to match the existing longitudinal joint. Use an appropriate sized backer rod material for the joint size complying with 1005.02.1.

Keep patches closed to traffic until standard test specimens conforming to 601.03.7 have attained a compressive strength of 3000 psi when tested in accordance with DOTD TR 230. Cure and transport cylinders to be tested in 24 hours or less in an insulated container without artificial heating until time of testing. Only with the Chief Construction Engineer's approval, can the maturity method be utilized for compressive strength determination.

Keep the patches closed to traffic until the sealants have satisfactorily cured.

602.10.3.2 Epoxy Mortar. Heavily prime the surface of the repair areas with neat blended epoxy immediately before placement of the epoxy mortar. Place and tamp the mixture with sufficient effort to eliminate voids and to thoroughly consolidate the mixture. Finish all patches to the cross section of the existing pavement.

After the epoxy mortar has been placed, saw and seal all transverse joints as shown on the plans with a sealant complying with 1005.02.1 in accordance with manufacturer's recommendations. Reestablish all longitudinal joints to match the existing longitudinal joints. Backer rod material shall comply with 1005.02.1.The patch surface shall conform to the existing surface; texture to match the texture of adjoining pavement. The finished patched surface shall meet the surface finish requirements of 601.03.11 except the finished patched surface profile shall meet a maximum 1/4 inch deviation using an approved minimum 10-foot metal static straightedge. Keep patches closed to traffic for at least 2 hours at air temperatures of over 60°F, and at least 4 hours at lower air temperatures unless otherwise recommended by the manufacture.

Keep the patches closed to traffic until the sealants have satisfactorily cured.

602.11 PATCHING CONTINUOUSLY REINFORCED CONCRETE PAVEMENT. Remove and replace continuously reinforced portland cement concrete pavement at locations shown on the plans or as directed and as follows.

Conduct patching operations in one lane at a time. Keep patches closed to traffic until standard test specimens conforming to 601.03.7 have attained a compressive strength of 3,000 psi when tested in accordance with DOTD TR 230.

Cure and transport cylinders to be tested in 24 hours or less in an insulated container without artificial heating until time of testing. Only with the Chief Construction Engineer’s approval, can the maturity method be utilized for compressive strength determination.

If unable to complete the repair within the allotted time, temporarily backfill the patch area and keep closed to traffic until the patch is completed.

Prior to pavement removal, outline the patch splice area by saw cutting the pavement to a minimum depth of 1 1/2 inches. Cut the pavement full depth a distance of 18 inches inward from the edges of the patch splice area or as shown on the plans. Remove pavement without bending or damaging reinforcing bars projecting into the patch splice area. Do not use hammers exceeding 40 lbs for pavement removal in the 18-inch splice area. Remove deteriorated base course in the patch area and replace with concrete as directed. Remove and replace base course in the patch area, damaged by the contractor, with concrete as directed by the engineer at no cost to

the Department. Place an approved bond breaker between the concrete patched base course and the pavement at no direct pay.

Furnish Grade 40 or 60 deformed reinforcing steel of the same size as the removed steel and tie to projecting steel bars to provide at least 16 inches of lap. Place transverse steel first on approved chairs, then place longitudinal bars on transverse bars and tie at bar intersections.

Place nominal 6-mil polyethylene sheeting over exposed underdrain system areas before placement of concrete. Do not damage the existing shoulder surfacing, base course, and underdrain system during repair operations. Repair shoulder surfacing, base course, and underdrain system damaged by the contractor at no cost to the Department.

Use Type B, D, or E concrete for pavement patching complying with Section 901. If utilized, only use an approved non-chloride type set-accelerating admixture complying with 1011.02 at the dosage recommended by the admixture manufacturer. Allow the addition of the set accelerator at the jobsite. Clean the vertical concrete surfaces within the patch area of loose particles, oil, dust, and other contaminates. Coat the vertical surfaces of existing pavement in the patch areas with a neat cement grout immediately prior to placement of new concrete. Place, consolidate, finish, and cure the concrete. Texture the patch surface to match the adjoining pavement. The finished patch surface shall meet the surface finish requirements of 601.03.11 except the finished patched surface profile shall meet a maximum 1/4 inch deviation using an approved minimum 10-foot metal static straightedge.

A lot will be a completed section or an identifiable pour completed in one day. Base the acceptance and payment for each lot on the compressive strengths of Table 601-3. Make payment for deteriorated base course removed, as directed by the engineer, and replaced with concrete in accordance with 602.17.7.

602.12 DIAMOND GRINDING CONCRETE PAVEMENT. Uniformly grind and texture existing portland cement concrete pavement roadway surfaces longitudinally using a diamond grinder in accordance with the plans and specifications or as directed and as follows.

602.12.1 Construction. Uniformly grind and texture areas of the pavement surface as designated on the plans to eliminate joint and crack faults and to provide a constant pavement cross slope within the designated grinding limits in each lane. When checked with a 3-ft straightedge, grind the adjacent sides of transverse joints and cracks until flush whereby both sides of the transverse joints and cracks are in the same plane.

Produce a consistent cross slope with assured water drainage without abrupt edges between passes of the grinding machine. When tested with a 10-foot straightedge perpendicular to centerline, the variation shall not exceed 1/4 inch.

Provide the surface of the ground pavement with a corduroy-type texture consisting of parallel grooves between 3/32 inches and 5/32 inches wide, with a distance between grooves of 1/16 inch to 1/8 inches and a difference between the peaks of the ridges and the bottom of the grooves of approximately 1/16 inches. Adjust blade spacing as necessary when the results fail to come within 25 percent of these criteria. If, in the engineer's opinion, the peak's height is not adequate to provide good skid resistance, remove the blades and use a wider spacer.

Inspect the pavement texture, which is a function of blade width, blade spacing, and cutting head alignment, after each new or rebuilt cutting head has ground 1000 lineal feet.

Promptly remove slurry or residue that results from the grinding operation. Prevent slurry flow across lanes occupied by public traffic, or into gutters or other drainage facilities. When practical, slurry may be disposed of on the slope near the shoulder edge as the machine progresses down the roadway, unless otherwise directed. Conduct a final sweeping with power equipment before opening the pavement to traffic. Grind after removing raised pavement markers, patching, and load transfer restoration. Grind before joint sealing, striping, and replacing raised pavement markers.

Begin and end grinding from locations normal to the pavement centerline. Do not leave the grounded area slick or polished. The entire travel way shall be ground as indicated on the plans, specifications, or as directed.

602.12.2 Equipment. Grind by sawing with an industrial diamond abrasive impregnated in the saw blades. Assemble the saw blades in a cutting head mounted on a self-propelled machine designed specifically for diamond grinding that will produce the required texture and smoothness level without damage to the concrete pavement or joint faces. Ensure that grinding equipment does not cause ravels, aggregate fractures, spalls, or disturbance to the joints. Grinding equipment shall be capable of working in a closed lane, adjacent to an open traffic lane.

Each self-propelled machine shall be capable of cutting a minimum path 3 feet wide and within 12 inches of the face of a concrete curb. Furnish sufficient equipment to complete the project in the working time specified.

Provide vacuuming and sweeping equipment for the removal of the slurry, residue, and excess water.

602.12.3 Final Surface Profile.

602.12.3.1 PCC Pavements. Meet acceptance requirements in 601.03.11.4.

602.12.3.2 Localized Spot Grinding of Joints and Irregular Areas on Existing PCCP. After completion of grinding and texturing, the

engineer will test the pavement surface for smoothness with a 10-foot straightedge at areas specified for grinding. The engineer will identify pavement areas that deviate more than 3/16 inches from the straightedge as defective work. The contractor may perform corrective work, but is not allowed to surface patch.

602.13 DIAMOND GROOVING CONCRETE PAVING.

602.13.1 Construction. Begin and end transverse or longitudinally grooved areas normal to the pavement's centerline.

Begin longitudinal grooving 6 inches from the outside edge of pavement or reflective marker and run in a continuous pattern across the lane surface to within 6 inches of all longitudinal joints.

Begin and end continuous transverse grooving 12 inches from the outside edges. Cut transverse grooves no closer than 3 inches or more than 6 inches from a transverse joint.

For longitudinal grooving, cut grooves in a pattern 1/8 inches wide by 3/16 inches deep with a center-to-center spacing of 3/4 inches. For transverse grooving, cut grooves in a pattern 1/8 inches wide by 3/16 inches deep with a random center-to-center spacing as specified in 601.03.9.8.

Promptly remove slurry or residue that results from the grooving operation. Prevent slurry flow across lanes occupied by public traffic, or into gutters or other drainage facilities. When practical, slurry may be disposed of on the slope near the shoulder edge as the machine progresses down the roadway, unless otherwise directed. Conduct a final sweeping with power equipment before opening the pavement to traffic.

602.13.2 Equipment. Furnish a multi-blade arbor and a minimum cutting head width of 3 feet. The grooving machine control device must align the grooves, detect variations in the pavement surface, and automatically adjust the cutting head height to maintain the specified depth. Furnish a full complement of grooving blades and spacers capable of cutting grooves to the specified width, depth, and spacing.

602.13.3 Final Surface Tolerances. Meet the tolerances specified below:

Spacing ±1/8 in.
Depth ±1/16 in.
Width ±1/64 in.

The engineer may allow the width of grooves on curves and super elevations to slightly exceed the above tolerances.

602.14 LONGITUDINAL SHOULDER JOINT. Construct a longitudinal joint in designated asphalt concrete shoulder surfacing adjacent to the PCCP in accordance with the plans or as directed and as follows.

Form joints by sawing a slot approximately 1/2-inch wide and 1/2-inch deep in the asphalt concrete shoulder adjacent to the PCCP. Flush the slot clean and dry immediately after sawing.

Just prior to placing joint sealant, blow the joint free of debris and water with compressed air. The compressor shall have an approved oil and water trap. The joint shall be dry before sealing. Seal prepared joints within 24 hours. Reclean joints that have become contaminated or dirty before sealing as directed. In areas where the shoulder has separated more than 1/2-inch from the pavement edge, place backer rod material in the joint prior to sealing.

Sealing materials shall be hot poured sealant complying with 1005.02.1. Install in accordance with the sealant manufacturer's recommendations. Keep the sealed joint closed to traffic until the sealant has satisfactorily cured to tack free.

602.15 REMOVAL OF EXISTING SHOULDER UNDERDRAIN SYSTEMS. Remove the existing shoulder underdrain system including the outfall and backfill the trench as required by the plan details or as directed and as follows.

Remove the existing cap at the pavement edge and at the outfall locations, along with the geotextile fabric, pipe, fittings, aggregate, and other incidentals associated with the shoulder underdrain system. Place particular attention on removing the geotextile fabric adjacent to the pavement edges. Ensure the removal of all fabric. Complete installation and remove the concrete headwall and rodent screen. Abandon the outfall pipe by plugging in accordance with 701.11 and backfilling to the satisfaction of the engineer.

Do not open more trench than can be closed in the same day.

Replace shoulder drains in accordance with Section 703 or the plans.

602.16 UNDERSEALING OR SLABJACKING PAVEMENT. Drill holes in concrete pavement and pump fly ash/cement slurry under the pavement to fill cavities (undersealing) or to raise the elevation of the pavement slabs (slabjacking).

602.16.1 Materials.

602.16.1.1 Portland Cement. Use Type I cement and comply with Section 1001.

602.16.1.2 Water. Comply with 1018.01.

602.16.1.3 Fly Ash. Comply with 1001.04.

602.16.1.4 Powdered Ammonium Lignin Sulfonate. The cementitious mix may include powdered ammonium lignin sulfonate for its rheological and water-reducing properties.

602.16.2 Equipment

602.16.2.1 Air Compressors and Drills. Use air compressors equipped with airlift pneumatic drills capable of drilling the required holes.

602.16.2.2 Mixer. Use high-speed (800 to 2000 rpm) colloidal mixers, or as approved, capable of thoroughly mixing slurry ingredients.

602.16.2.3 Roller. Use a pneumatic-tire vehicle capable of exerting a single-axle load of 9 tons.

602.16.3 Proportioning and Consistency.

602.16.3.1 Proportioning. The slurry shall consist of one part portland cement and three parts fly ash by volume and water sufficient to meet the consistency requirements of 602.15.3.2. If utilized, add powdered ammonium lignin sulfonate at the rate of 0.5 to 1.5 percent by weight of cement.

602.16.3.2 Consistency. The slurry shall be of such consistency that the efflux time from the flow cone, when tested in accordance with DOTD TR 633, is 12 to 18 seconds for undersealing, and 15 to 26 seconds for slabjacking.

602.16.4 Construction Requirements

602.16.4.1 General. Drill holes of approximately 1-1/2 inches in diameter through the pavement at locations shown on the plans or as directed. Rotate drills to avoid cracking pavement and hold as nearly perpendicular as possible to pavement surfaces. Clean holes with compressed air prior to undersealing. Fill any unusable holes with slurry and drill new holes. Do not drill more holes than can be used or filled during a day's operations. After drilling holes, connect a pipe to the discharge hose of the pressure pump and insert into the hole. Do not allow the discharge end of the pipe to extend below the bottom of pavement.

When pooling of slurry occurs, provide additional holes in the slab as directed. Pump more slurry through these new holes to fill voids between pools.

When backpressure forces slurry out of the hole onto the slab after withdrawal of discharge pipe, temporarily plug the hole until the slurry has set. After completion of pumping in a hole, remove the discharge pipe or plug and fill the hole with slurry.

Keep drainage structures clean of slurry mixture. Monitor all drainage structures within the affected areas. When the pumping operation is forcing the slurry into a drainage structure, discontinue pumping operations and immediately clean the drainage structure of slurry mixture.

When directed, proof roll undersealed or slabjacked pavements with the specified roller at no direct pay; however, do not conduct proof rolling until at least 24 hours after completion of undersealing. When such proof rolling indicates that cavities exist beneath the slab, fill such cavities as directed at no direct pay.

Promptly remove slurry or residue that results from undersealing or slabjacking operations. Prevent slurry flow across lanes occupied by public traffic, or into gutters or other drainage facilities. When practical, slurry may be disposed of on the slope near the shoulder edge as the machine progresses down the roadway, unless otherwise directed. Conduct a final sweeping with power equipment before opening the pavement to traffic.

602.16.4.2 Undersealing. Fill all voids beneath pavement with pumped slurry. Fill all cavities within range of the pumped hole as evidenced by lifting of the slab or slurry flowing out of an adjacent hole, through pavement joints or cracks, or out of the shoulder-pavement joint. Do not exceed pumping pressures over 200 psi. When pressures cause pavement lifting, use a lower pumping pressure. Lifting of the slab as a result of pumping shall not exceed 1/8 inch. Monitor the slab lifting by approved methods at all times during undersealing. Terminate all pumping operations that cause voids to form under the pavement in the immediate area. The sequence of pumping from hole to hole shall be as directed.

602.16.4.3 Slabjacking. Conduct pumping operations for slabjacking in an approved manner and sequence. Monitor the slab lifting at all times during pumping operations. Raise pavement slabs to the required grade by continuous pumping with a tolerance of ±1/8 inch.

602.16.5 Dowel Bar Retrofit. Install plastic coated 1 1/2 inch diameter by 18-inch long plain round dowel bars into slots cut across and through existing concrete pavement transverse joints. Remove the existing portland cement concrete pavement from the slots and retro fit the dowel bars across the pavement joints. Fill the voids surrounding the dowel bars with a rapid setting concrete patching material on the AML. Saw and seal the transverse joints as required in the plans. All work shall conform to the plans, and the following requirements.

Patented processes or devices for simultaneous cutting of slots for dowel bar retrofitting shall conform to 107.03.

602.16.5.1 Materials. Dowel bars shall be in accordance with 1009.03.

The dowel bars shall have tight fitting plastic end caps that allow for 1/4-inch bar movement at each end of the bar. Submit an end cap sample to the project engineer for approval prior to installation.

Use nonmetallic chair devices to support and hold the dowel bars in place. The chairs shall be in contact with the bottom and sides of the slot in order to maintain horizontal and vertical dowel bar alignments. Submit a chair sample to the project engineer for approval prior to installation.

The foam core board filler material shall be 1/4-inch thick constructed of closed cell foam and faced with poster board material on each side.

Use a silicone caulk that on the AML for sealing the existing transverse joint at the bottom and sides of the slot.

Select an Approved Materials List low shrinkage cementitious concrete patching material to backfill the slots listed under Rapid Setting Patching Materials for Concrete that meets the following requirements when tested at the water content used at the project site:

1. Compressive strength 3 hr., minimum 3,000 psi - ASTM C 109
2. Compressive strength 24 hr., minimum 5,000 psi - ASTM C 109
3. Shrinkage 4 days, 0.13 percent maximum - ASTM C 157

Obtain and provide the manufacturer's technical specifications for approval of the patching product including all additives required to meet the minimum compressive strengths.

Curing compounds recommended by the patching material manufacturer shall be in accordance with Section 1011.

602.16.5.2 Construction Requirements. Install the dowel bars as follows:

Saw cut slots in the pavement parallel to the centerline of the roadway to a depth sufficient to place the center of the dowel bar at mid-depth in the pavement. Multiple saw cuts parallel to the centerline may be required to properly remove the material from the slot. Make the saw cuts for the slots at each transverse joint such that the dowel bars can be positioned parallel to the roadway centerline and surface in accordance with plan details.

Jackhammers used to break loose concrete shall not be larger than the 30-pound class. If the 30-pound jack hammer damages the pavement, use a lighter weight hammer.

Sand blast and clean all exposed surfaces and cracks in the slot prior to bar installation. Equip air compressors with approved oil and moisture traps.

Fill the transverse contraction joint on the bottom and the sides of the slot with silicone caulk. Prior to patching, clean all caulking material from the bottom and sides of the slot that will result in breaking of the bond with the patching material.

Lightly oil or grease the dowel bars prior to placement. The bar chairs shall provide a minimum of 1/2-inch clearance between the bottom of the dowel bar and the bottom of the slot. Center the dowel bars over the transverse joint. Place the bar in the middle of the slot to the depth shown on the plans, parallel to the roadway centerline and the roadway surface. The chairs shall hold the dowel bar securely in place during placement of the patching mix.

Place a 1/4-inch thick foam core board at the middle of the dowel bar to maintain the transverse contraction joint. Cut or remove the existing joint sealant if necessary to accommodate the foam core board. The foam core board shall fit tightly around the dowel bar and to the bottom and edges of the slot. Place the top of the foam

core board flush with the top surface of the concrete pavement. The foam core board shall remain in a vertical position and be tight to all edges during the placement of the patching material.

Thoroughly moisten all surfaces on the sawed slot immediately prior to filling with patch compound unless the patching material manufacturer recommends the slot surface to be dry. Take care to prevent standing water in the slot. Remove all excess water with compressed air.

Fill the slot (with the installed dowel bar, chairs, foam core board, and silicone in place) with an approved patching material. Mix the patching material in accordance with the manufacturer's recommendations and with mixing equipment approved by the engineer. Vibrate the patching material with a small hand held vibrator capable of thoroughly consolidating the patching compound into the slot and around the dowel bar. Trowel finish and cure the top surface of the filled slot. Cure the patched areas as recommended by the patching material manufacturer.

Provide six 2-inch cube molds in accordance with ASTM C 192 for sampling and testing the patching material once for each 4 hours of production or a minimum of once per day. Make test specimens in accordance with ASTM C 192. If the compressive strengths are not being met, cease production and take corrective measures to the satisfaction of the engineer.

Allow the patching material to cure for a minimum of four hours before placing any vehicle loads on the repair or as directed.

Saw the transverse joints then seal with a sealant complying with 1005.02.3 in accordance with plan details and the manufacturer’s directions. Use an appropriate sized backer rod material for the joint size complying with 1005.02.1. Use an Approved Materials List backer rod material.

Repair or replace all nonfunctioning or damaged dowel bars at no cost to the Department.

602.17 MEASUREMENT. Measurement of portland cement concrete pavement rehabilitation will be as follows:

1. Measure Cleaning and Filling Existing Longitudinal Pavement Joints by the linear foot.
2. Measure Cleaning and Resealing Existing Longitudinal and Transverse Pavement Joints by the linear foot.
3. Measure Cleaning and Sealing Cracks by the linear foot along the centerline of the crack at the pavement surface.
4. Measure Full Depth Corner Patching of Jointed Concrete Pavement by the square yard.
5. Measure Full Depth Patching of Jointed Concrete Pavement by the square yard.

6. Measure Partial Depth Patching of Jointed Concrete Pavement by the square yard.
7. Measure Patching of Continuously Reinforced Concrete Pavement by the square yard.
8. Measure Grinding by the square yard. Measurement will be of the final ground area. Pavement ground area will be determined by multiplying the width of the ground area by the horizontal length ground.
9. Measure Grooving of Concrete Pavement by the square yard. Determine the quantity of pavement grooving by multiplying the width and length of the grooved pavement. No deductions will be made for grooving omitted at edges, joints, manhole, or other devices.
10. Measure Longitudinal Shoulder Joints by the linear foot.
11. Measure Removal of Existing Shoulder Underdrain Systems by the linear foot along the pavement edge.
12. Measure Undersealing Pavement or Slabjacking Pavement by the ton of portland cement used in the slurry. Measure holes for undersealing or slabjacking per each. There is no measure for fly ash or slag, admixtures, and water for payment.
13. Measure dowel bar retrofit per each dowel bar installed and accepted.

602.18 PAYMENT. Payment for portland cement concrete pavement rehabilitation includes furnishing all labor, materials, tools, equipment, and all incidentals for performing the work specified.

602.18.1 Cleaning and Filling Existing Longitudinal Pavement Joints. Payment will be made at the contract unit price per linear foot.

602.18.2 Cleaning and Resealing Existing Longitudinaland Transverse Pavement Joints. Payment will be made at the contract unit price per linear foot.

602.18.3 Cleaning and Sealing Cracks. Payment will be made at the contract unit price per linear foot.

602.18.4 Full Depth Corner Patching of Jointed Concrete Pavement. Payment will be made at the contract unit price per square yard. Base the payment for deteriorated base course removed and replaced with concrete, as directed by the engineer, and as follows: The value per inch thickness of corner patching will be determined by dividing the contract unit price per square yard by the plan thickness. Measure the thickness of patches from the surface that exists at the time of patching to the top of base course. Payment for the additional thickness of base course replaced with concrete will be made at 50 percent of the value per inch thus determined.

602.18.5 Full Depth Patching of Jointed Concrete Pavement. Base acceptance and payment for full depth patching of jointed concrete pavement on a lot basis at the contract unit price per square yard, adjusted in accordance with the following provisions. A lot will be a completed section or an identifiable pour completed in one day. Base the acceptance and payment for each lot on the compressive strengths of Table 601-3. Payment will be at the contract unit price per square yard as specified in 602.08.

Base payment for deteriorated base course removed and replaced with concrete, as directed by the engineer, and as follows: The value per inch thickness of full depth pavement patching will be determined by dividing the contract unit price per square yard by the plan thickness. Measure the thickness of patches from the surface that exists at the time of patching to the top of base course. Payment for the additional thickness of base course replaced with concrete will be made at 50 percent of the value per inch thus determined.

602.18.6 Partial Depth Patching of Jointed Concrete Pavement. Make payment for partial depth patching of jointed concrete pavement will be made at the contract unit price per square yard.

When portland cement concrete is used for patching material in partial depth patches, the concrete will be accepted on a lot basis at the contract unit price per square yard. Base the acceptance and payment for each lot on the compressive strengths of Table 601-3.

602.18.7 Patching Continuously Reinforced Concrete Pavement. Make payment for continuously reinforced concrete pavement, on a lot basis, at the contract unit price per square yard, adjusted in accordance with the following provisions. A lot will be a completed section or an identifiable pour completed in one day. Base the acceptance and payment for each lot on the compressive strengths of Table 601-3.

Payment for patching continuous reinforced concrete pavement per square yard includes furnishing all labor, materials, tools, and incidentals for performing the work as specified in 602.10.

Make payment for deteriorated base course removed, as directed by the engineer, and replaced with concrete as follows: The value per inch thickness will be determined by dividing the contract unit price per square yard by the plan thickness. Measure the thickness of patches from the surface that exists at the time of patching. Payment for the additional thickness will be made at 50 percent of the value per inch thus determined.

602.18.8 Grinding Concrete Pavement and Joints. Payment will be made at the contract unit price per square yard.

602.18.10 Longitudinal Shoulder Joint. Payment will be made at the contract unit price per linear foot.

602.18.11 Removal of Existing Shoulder Underdrain Systems. Payment will be made at the contract unit price per linear foot.

602.18.12 Undersealing and Slabjacking Pavement. Payment will be made at the contract unit price per ton of portland cement. Payment for holes will be per each.

602.18.13 Dowel Bar Retrofit. Payment will be made at the contract unit price per each.

Payment will be made under:

Item No.	Pay Item	Pay Unit
602-01	Cleaning and Filling Existing Longitudinal Pavement Joints	Linear Foot
602-02	Cleaning and Resealing Existing Longitudinal and Transverse Pavement Joints	Linear Foot
602-03	Cleaning and Sealing Cracks	Linear Foot
602-04	Full Depth Corner Patching of Jointed Concrete Pavement	Square Yard
602-05	Full Depth Patching of Jointed Concrete Pavement	Square Yard
602-06	Partial Depth Patching of Jointed Concrete Pavement	Square Yard
602-07	Patching Continuously Reinforced Concrete Pavement	Square Yard
602-08	Diamond Grinding Concrete Pavement	Square Yard
602-09	Diamond Grooving Concrete Pavement	Square Yard
602-10	Longitudinal Shoulder Joints	Linear Foot
602-11	Removal of Existing Shoulder Underdrain Systems	Linear Foot
602-12	Undersealing Pavement	Ton
602-13	Slabjacking Pavement	Ton
602-14	Holes	Each
602-15	Dowel Bar Retrofit	Each
602-16	High Early Strength (HES) Concrete Pavement Full and Partial Depth Patching	Square Yard

PART VII—INCIDENTAL CONSTRUCTION

Section No. **Page No.**

701 Culverts and Storm Drains 349
702 Manholes, Junction Boxes, Catch Basins, and End Treatments 362
703 Underdrain Systems 366
704 Guardrail 371
705 Fences 374
706 Concrete Walks, Drives, and Incidental Paving 378
707 Curbs and Gutters 381
708 Right-of-Way Monuments 385
709 Steel Cattle Guards 387
710 Flowable Fill 389
711 Riprap 392
712 Revetments 396
713 Temporary Traffic Control 400
714 Sodding 420
715 Topsoil 423
716 Vegetative and Fiber Mulch 425
717 Seeding 428
718 Fertilizer and Agricultural Lime 432
719 Landscaping 434
720 Erosion Control Systems 445
721 Mowing, Trimming, and Debris Collection 447
722 Field Laboratories 451
723 Granular Material 453
724 Rumble Strips 455
725 Temporary Detour Roads 457
726 Bedding Material 459
727 Mobilization 461
728 Jacked or Bored Pipe 463
729 Permanent Signs 466
730 Vacant 476
731 Raised Pavement Markers 477
732 Plastic Pavement Markings 480
733 Vacant 487
734 Rubblizing Portland Cement Concrete Pavement 488

Section No. **Page No.**

735 Mailboxes and Mailbox Supports..... 494
736 Traffic Signals 496
737 Painted Traffic Striping 515
738 Mulch Sodding 520
739 Hydro-Seeding..... 522
740 Construction Layout 524
741 Water Distribution Systems (Supplemental Specification)..... 527
742 Sanitary Sewer Systems (Supplemental Specification) 528
743 Airport Pavement Markings (Supplemental Specification) 529
744 Traffic Control Devices (Supplemental Specification)..... 530

Section 701
Culverts and Storm Drains

701.01 DESCRIPTION. Furnish, install, and clean pipe, pipe arch, storm drains, and sewers, also referred to as culverts or conduits, in accordance with these specifications and in conformity with the lines and grades shown on the plans or as established by the engineer.

701.02 MATERIALS. Materials shall comply with the following sections and subsections:

Usable Soil	203.06.1
Selected Soil	701.08.1
Plastic Soil Blanket	203.10
Flowable Fill	710
Portland Cement Concrete	901
Mortar	1001.03
Reclaimed Asphalt Pavement (RAP)	1003.01.3.2, 1003.06.5
Stone	1003.03.1
Recycled Portland Cement Concrete	1003.03.2
Granular Material	1003.09
Bedding Material	1003.10
Thermoplastic Pipe	1006
Split Plastic Coupling Bands	1006.06
Plastic Yard Drain Pipe	1006
Gasket Material	1016.01.1
Reinforced Concrete Pipe	1016.02
Reinforced Concrete Pipe Arch	1016.03
Bituminous Coated Corrugated Steel Pipe and Pipe Arch	1007.02
Structural Plate for Pipe, Pipe Arch and Arch	1007.04
Corrugated Aluminum Pipe and Pipe Arch	1007.05
Coupling Bands	1007.09, 1007.08.1
Reinforcing Steel	1009
Geotextile Fabric	1019

701.02.1 Side Drain Pipe or Side Drain Pipe Arch: When an item for Side Drain Pipe or Side Drain Pipe Arch is included in the contract, furnish thermoplastic pipe, corrugated metal pipe or corrugated metal pipe

arch, or reinforced concrete pipe or reinforced concrete pipe arch as allowed by Sections 1006, 1007, or 1016, respectively, unless otherwise specified.

701.02.2 Cross Drain Pipe or Cross Drain Pipe Arch: When an item for Cross Drain Pipe or Cross Drain Pipe Arch is included in the contract, furnish thermoplastic pipe, corrugated metal pipe or corrugated metal pipe arch, or reinforced concrete pipe or reinforced concrete pipe arch as allowed by Sections 1006, 1007, or 1016, respectively, unless otherwise specified.

701.02.3 Storm Drain Pipe or Storm Drain Pipe Arch: When an item for Storm Drain Pipe or Storm Drain Pipe Arch is included in the contract, furnish thermoplastic pipe, reinforced concrete pipe or reinforced concrete pipe arch allowed by Sections 1006 or 1016, respectively, unless otherwise specified.

701.02.4 Yard Drain Pipe: When an item for Yard Drain Pipe is included in the contract, furnish thermoplastic pipe in accordance with Section 1006 unless otherwise specified.

701.02.5 Material Type Abbreviations

701.02.5.1 Reinforced Concrete Pipe:

RCP	Reinforced Concrete Pipe
RCPA	Reinforced Concrete Pipe Arch

701.02.5.2 Corrugated Metal Pipe:

CAP	Corrugated Aluminum Pipe
CAPA	Corrugated Aluminum Pipe Arch
CMP	Corrugated Metal Pipe
CMPA	Corrugated Metal Pipe Arch
CSP	Corrugated Steel Pipe
CSPA	Corrugated Steel Pipe Arch
BCCSP	Bituminous Coated Corrugated Steel Pipe
BCCSPA	Bituminous Coated Corrugated Steel Pipe Arch

701.02.5.3 Thermoplastic Pipe:

TPP	Thermoplastic Pipe
PVCP	Polyvinyl Chloride Pipe
RPVCP	Ribbed Polyvinyl Chloride Pipe
CPEPSW	Corrugated Polyethylene Pipe Single Wall
CPEPDW	Corrugated Polyethylene Pipe Double Wall

701.02.6 Joint Type Abbreviations:

T1	Type 1 Joint
T2	Type 2 Joint
T3	Type 3 Joint

701.02.7 Quality Assurance for Pipe: Manufacturing plants will be periodically inspected for compliance with specified manufacturing methods, and material samples will be randomly obtained for laboratory testing for verification of manufacturing lots. Materials approved at the manufacturing plant will be subject to visual acceptance inspections at the jobsite or point of delivery.

701.03 EXCAVATION. For all trench excavation, ensure that the sides of the trench are stable, as evidenced by the sides of the trench being able to maintain a vertical cut face. Consider the sides unstable if fissures develop in the face of or adjacent to the open excavation; if the edge of the excavation subsides; if material ravels, spalls, or slumps from the face of the excavation; or if the bottom of the excavation bulges or heaves. In all cases of apparent distress, or when the trench excavation exceeds 5 feet in depth, sloping, benching, and shoring will be required in accordance with the OSHA trench safety standards, 29 CFR § 1926 (P). Consider these and any more stringent trench safety standards as minimum contract requirements.

Submission of bid and subsequent award of contract will serve as certification that all trench excavation in excess of 5 feet will be in compliance LA R.S. 48:251.1.

Consider all available geotechnical information when designing the trench excavation safety system, including groundwater. Evaluate trench stability due to the effects of surcharge loads from adjacent structures, stored materials and equipment, or traffic. Ensure that excavated material is placed a sufficient distance back from the trench edge to preclude material from falling back into the trench, otherwise provide an adequate retention system.

Ensure that the bottom width of a pipe trench provides at least 18 inches of clearance on each side of the pipe. In accordance with 202.02, satisfactorily dispose of surplus excavated material that does not conform to the requirements of 203.06.1. Control rainfall runoff or excess moisture by proper selection of backfill materials, dewatering sumps, wells, well points, or other approved procedures during excavation, bedding installation, over-excavated trench backfilling, pipe placement, and pipe backfill.

701.03.1 Over-Excavation: When encountering unsuitable soils as defined in 203.04, or a stable, non-yielding foundation cannot be obtained at either the established pipe grade or at the grade established for placement of the bedding, remove unstable or unsuitable soils below this grade and replace with granular material complying with 1003.09, bedding materials complying with 1003.10, or Type A backfill complying with 701.08.1. Place all granular backfill materials below the established pipe or bedding grade in

lifts less than 8 inches thick. Compact sufficiently with a dynamic mechanical hand compaction device over the surface of each lift to form a stable, non-yielding foundation at the surface of the established bedding or pipe grade.

When encountering rock, remove the rock below grade and replace it with granular material, bedding materials, or Type A backfill. Provide a compacted earth cushion thickness under the pipe of at least 1/2 inch per foot of fill height over the top of the pipe with a minimum thickness of 8 inches. Place all granular backfill materials below the established pipe or bedding grade in lifts less than 8 inches thick. Sufficiently compact with a dynamic mechanical hand operated compaction device over the surface of each lift to form a stable, non-yielding foundation at the surface of the established bedding or pipe grade.

Materials used to backfill in an over-excavated portion of a trench do not require encasement in a geotextile fabric.

701.04 FORMING PIPE BED. When specifying bedding material, construct in accordance with Section 726. Materials allowed for bedding shall comply with 1003.10 or may be type a backfill materials. When specifying bedding materials, perform additional excavation below established pipe grade and place the bedding material in lifts less than 8 inches thick. Lightly compact with a dynamic hand compaction device over the surface of each lift.

When the bottom of the pipe is not laid in a trench but constructed above natural soils, construct a uniform bed as specified for the bottom of a trench.

In lieu of removing and replacing unstable soil with granular material, bedding material, or Type A backfill material, a cabled articulated concrete block mattress meeting the requirements of Section 712 may be used with a 6-inch layer of bedding material between the pipe and the mattress installed in accordance with Section 726. Excavate the trench to a depth 6 inches plus the thickness of the mattress below the grade line of the pipe. Join adjacent mattress segments together to form a continuous supporting foundation beneath the pipe to the satisfaction of the engineer.

701.05 LAYING PIPE. Begin laying pipe at the downstream end of the line. Ensure that the pipe is in contact with the foundation throughout its length. Place bell or grooved ends of pipe and outside circumferential laps of riveted metal pipe facing upstream. Place riveted seam metal pipe with longitudinal laps at sides. Pipes in each continuous line shall have the same

wall thickness. Handle metal pipes provided with lifting lugs only by these lugs.

After laying pipe and before placing backfill, the engineer will inspect the pipe for alignment, grade, integrity of joints, and coating damage.

701.06 JOINING PIPE.

701.06.1 Joint Usage:

701.06.1.1 Type 1 (T1) Joints: Use Type 1 joints for side drains under driveways and similar installations.

701.06.1.2 Type 2 (T2) Joints: Use Type 2 joints for cross drains under roadways, including turnouts.

701.06.1.3 Type 3 (T3) Joints: Use Type 3 joints for storm drain systems, flumes, and siphons.

701.06.2 Concrete Pipe: Concrete pipe may be either bell and spigot or tongue and groove. Join pipe sections so that ends are fully entered and inner surfaces are flush and even.

Use an approved mechanical pipe puller for joining pipes over 36 inches in diameter. For pipe 36 inches or less in diameter, use any approved method for joining pipe that does not damage the pipe.

Joints shall comply with 1016.01.1 and 1018.03. Seal with gasket material installed in accordance with the manufacturer's recommendations.

701.06.3 Metal Pipe: Firmly join metal pipe by coupling bands. Center bands over the joint.

For Type 1 joints, place approved gasket material in one corrugation recess on each side of the joint at the coupling band and on each band connection in such manner to prevent leakage.

When Type 2 or 3 joints are specified, join metal pipe sections as follows:

701.06.3.1 General: Seal band joints with gasket material. Place gasket material in accordance with the plan details.

701.06.3.2 Circular Section: Connecting bands shall be of an approved design. Install in accordance with plan details.

701.06.3.3 Arch Section: Connecting bands shall be a minimum of 12 inches wide for a pipe arch less than 36 inches round equivalent diameter, and a minimum of 21 inches wide for pipe arch 36 inches round equivalent diameter and greater. Connect bands at the ends by approved angle or strap connections. Use two-piece connecting bands for a pipe arch 36 inches round equivalent diameter and greater.

701.06.4 Plastic Pipe: Joints for plastic pipe shall be bell and spigot or split coupling bands.

701.06.4.1 Bell and Spigot Type Joint System: Join pipe sections so that ends are fully entered and inner surfaces are flush and even.

Use any approved method for joining pipe that does not damage the pipe.

After joints approval, seal with a rubber gasket material complying with 1007.08.4.1.

701.06.4.2 Split Coupling Type Joint System: Split coupling bands shall comply with all dimensional and material requirements of 1006.06. Center the bands over the joint. Secure the split coupling band to the pipe with a minimum of five stainless steel or other approved corrosion resistant bands.

After joints approval, seal with gasket material. Place gasket material in the first two corrugation recesses on each side of the pipe connection. Also place gasket material on each band connection to prevent leakage. When using flexible plastic gasket material, it shall be a minimum of 1/2 inch in size. Tighten the bands to create overlap of the band and adequately compress the gasket material.

701.06.5 Connections: Use approved connections when joining new pipes to existing pipes. When using concrete collars to extend the ends of existing pipes that have been damaged or to join different types or sizes of pipes, construct the concrete collars in accordance with plan details, the applicable requirements of Section 901, and as directed.

701.06.6 Geotextile Fabric Wrapped Pipe Joints: For concrete, metal, and plastic pipes, use Types 2 and 3 joints wrapped with geotextile fabric for a minimum of 12 inches on each side of the joint for pipe 36 inches or less in diameter and a minimum of 18 inches on each side of the joint for pipe greater than 36 inches in diameter. Wrap the ends of the fabric around the circumference of the pipe and overlap at least 10 inches. Secure the edges and ends of fabric for the entire circumference of the pipe.

701.07 RELAYING PIPE. If specified or directed, remove existing pipes and relay suitable sections as specified for new pipes.

701.08 BACKFILLING.

701.08.1 General: Prior to backfilling, remove pipes found to be damaged or out of alignment or grade; reinstall or replace.

Type A backfill material shall be stone, recycled portland cement concrete, flowable fill, or RAP.

Type B backfill materials are select soils. Select soils are natural soils with a maximum PI of 20, a maximum liquid limit of 35, and a maximum

organic content of 5 percent. Soils with a silt content of 50 percent or greater and also a PI of 10 or less will not be allowed. Where Type B backfill materials are called for, Type A backfill materials may be substituted.

When using corrugated metal pipe, the backfill material shall be tested and shall have a resistivity greater than 1500 ohm-cm and a pH greater than 5 when tested in accordance with DOTD TR 429 and DOTD TR 430 respectively.

When using Type A backfill material, place geotextile fabric to surround this backfill in accordance with 726.03 between the aggregate backfill material and all other natural or placed soils in the trench or embankment. Take care to prevent damage to geotextile fabric during placement of backfill material. For concrete pipe, enclose not only the initial backfill with the fabric, but wrap the fabric over the top of the pipe with at least 12 inches of overlap.

When using a trench box or trench sheeting in unstable soils and/or for worker safety, and when moved during backfilling operations, immediately fill and provide additional compaction of the disturbed zone of backfill to the satisfaction of the engineer.

Initial backfill is a structural backfill encasing the pipe from the bottom of the pipe to the springline for concrete pipe and to a point one foot above the top of the pipe for both metal and plastic pipe. Final backfill is not a structural backfill. Final backfill extends from the top of the initial backfill to the top of the natural ground or subgrade in cut areas or to the top of existing ground in fill areas. Consider and treat any fill required above the final backfill as embankment.

701.08.2 Backfill Applications: For projects using the A+B+C bidding method where considering rigid and flexible pavement alternates, use the backfill application in 701.08.2.2 for either rigid or flexible pavements.

701.08.2.1 Pipe Under Concrete Pavements: Type B backfill may be used as initial and final backfill for all pipes, culverts, or drains under portland cement concrete pavements. Place and compact as specified in 701.08.4.

701.08.2.2 Cross Drains Under Flexible Pavements: All reaches of cross drains, exclusive of those portions of the pipe which are under shoulders, and all other culverts, pipes, or drains that cross the centerlines of new or existing flexible pavement roadways, including intersections that are under flexible pavements, shall receive an initial backfill of Type A material. Type B backfill materials may be used as final backfill for all pipes. Place and compact as specified in 701.08.3 and

701.08.4. Where the subgrade is above existing ground, use embankment material as specified for the remainder of the project from the top of the final backfill to the top of the established embankment grade.

701.08.2.3 Other Drains Under Flexible Pavements: All reaches of all culverts, pipes, or drains under flexible pavements that do not cross the centerlines of new or existing roadways, and exclusive of those portions of the pipe which are totally under shoulders, shall receive an initial and final backfill of Type B material. Place and compact as specified in 701.08.4. Where the subgrade is above existing ground, use embankment material as specified for the remainder of the project from the top of the final backfill to the top of the established embankment grade.

701.08.2.4 Other Areas: All culverts, pipes, or drains in unpaved areas or paved areas that serve as driveways or shoulders shall receive an initial and final backfill of Type B material. Place and compact as specified in 701.08.4.

701.08.2.5 Pipes Subject to Construction Traffic: Construct the embankment or pipe backfill to a minimum height of 24 inches over the pipe before allowing heavy construction equipment to cross the installation. Where practical, do not construct installations with less than 24 inches of cover over the top of the pipe until after completing the heavy hauling over the pipe location. After completion of hauling operations, remove excess cover material. Remove and reinstall or replace, pipe damaged by hauling and backfilling operations at no direct pay.

701.08.3 Placement and Compaction - Type A Backfill: For all pipes, culverts, and conduits under paved and unpaved areas, where using Type A backfill material, thoroughly hand compact the Type A backfill under the pipe haunches and then dynamically compact in layers not exceeding 8 inches compacted thickness. Initially compact under the haunches of the pipe by hand tamping or other acceptable means, until reaching a level in which the dynamic tamping can commence. Compact each lift by applying at least eight passes of a hand operated, dynamic mechanical compaction device over the surface of each lift. With approval of the engineer, layer thickness may be increased to 12 inches with verification of satisfactory installation and performance. If using flowable fill, furnish, place, and consolidate in accordance with Section 710. Control placement operations during initial backfill operations without damage to protective coatings on metal pipes. Repair damaged coatings at no additional pay.

701.08.4 Placement and Compaction - Type B Backfill: For all pipes, culverts, and conduits where Type B backfill is allowed, place the

Type B material in layers not exceeding 8 inches compacted thickness. Compact with suitable mechanical equipment. With approval of the engineer, layer thickness may be increased to 12 inches with verification of satisfactory installation and performance.

701.08.5 Placement and Compaction- Trenchless or Partial Trench Condition: All pipes, culverts, drains, and conduits placed with any portion of the pipe above existing ground shall comply with 701.08.1, 701.08.2, 701.08.3; 701.08.4 shall be for the portion of the pipe within a trench and the portion of the pipe not constructed in a trench. The initial and final backfill of that portion of pipe above existing ground and not within a trench shall be constructed to such a width that the requirements for placement, compaction, and density are met.

701.08.6 Density Requirements: The in-place density of Type A backfill materials and bedding materials will not be measured or calculated. Place Type A backfill, exclusive of RAP and flowable fill, at or near optimum moisture content in accordance with DOTD TR 415 or 418. Place and compact RAP materials in a slightly moist condition.

Determine the maximum dry density of initial or final Type B backfill under all paved areas which are to be under traffic in accordance with DOTD TR 415 or TR 418. Determine in-place density in accordance with DOTD TR 401. Place initial and final Type B backfill under all paved areas under traffic, at or near optimum moisture content in accordance with DOTD TR 415 or TR 418. Compact each layer by approved methods prior to the placement of a subsequent layer. The engineer will approve the compaction method upon validation that such method, including moisture control, will achieve at least 95 percent of maximum dry density in accordance with DOTD TR 401. Density testing on subsequent backfill layers may be waived by the engineer if installation has been in accordance with approved compaction methods and performance has been continuously satisfactory. Place initial and final backfill in unpaved or paved areas, such as shoulders or driveways, evenly and compact along the length of the culvert, pipe, or drain from the top of the initial backfill to the top of the subgrade. Compact layered backfill to at least the density of the adjoining existing soils or the compaction required of the laterally adjoining layers of soil immediately outside the trench for embankment elevations. Place and compact initial and final backfill at or near optimum moisture content in accordance with DOTD TR 415 or TR 418.

701.09 INSPECTION OF PIPES. After completion of embankment and prior to roadway surfacing, the engineer shall inspect pipes for proper

alignment and integrity of joints. Correct any misaligned pipe or defective joints at no direct pay.

701.09.1 Plastic Pipe: Test installed plastic pipe to ensure that vertical deflections do not exceed 5.0 percent. Maximum allowable deflections shall be governed by the mandrel requirements stated herein.

Perform deflection tests no sooner than 30 calendar days after installation and compaction of backfill. Clean the pipe and inspect for offsets and obstructions prior to testing.

For pipe 36 inches and less in diameter, pull a mandrel through the pipe by hand to ensure that maximum allowable deflections have not been exceeded. The mandrel must be approved by the engineer prior to use. Use of an unapproved, mandrel or a mandrel altered or modified after approval mandrel will invalidate the test. If the mandrel fails to pass through the pipe, the pipe is over-deflected.

Unless otherwise permitted, uncover over-deflected pipe and, if not damaged, reinstall. Do not reinstall damaged pipe. Remove and replace with new pipe. Any pipe subjected to any method or process other than removal, which attempts, even successfully, to reduce or cure any over-deflection, shall be removed and replaced with new pipe.

Use a rigid, nonadjustable, odd-numbered leg (minimum 9 legs) mandrel having a length not less than its nominal diameter or 24 inches, whichever is less. The minimum diameter at any point shall be 5.0 percent less than the base inside diameter of the pipe being tested. The mandrel shall be fabricated of steel, aluminum, or other approved material fitted with pulling rings at each end. The nominal pipe size and outside diameter of the mandrel shall be stamped or engraved on some segment other than a runner. Furnish a suitable carrying case.

For pipe larger than 36 inches in diameter, determine deflection by a method approved by the engineer. If a mandrel is selected, the minimum diameter, length, and other requirements shall conform to the above requirements.

Conduct mandrel testing in the presence of the engineer. Mandrel testing shall be at no direct pay.

701.09.2 Metal Pipe: If the inside diameter of metal pipe or rise dimension of metal pipe arch deflects more than 5.0 percent from original dimensions, remove and reinstall the metal pipes or pipe arches, unless they do not rebound or are damaged. Remove pipes or pipe arches which are damaged or do not rebound; and replace at no direct pay. Measurement of deflection will be made by the engineer away from rerolled ends.

701.10 CLEANING PIPES.

701.10.1 Existing Pipes: Clean designated pipes of soil, debris, and other materials to the invert of the pipe by approved methods that will not damage the pipes. Satisfactorily repair all damage caused by the contractor's operations at no direct pay.

Dispose of removed soil, debris, and other materials in accordance with 202.02 or as otherwise approved in writing.

701.10.2 Contractor Installed Pipes: Prior to final acceptance, clean pipes of all debris and soil to the invert of the pipe at no direct pay.

Dispose of removed soil, debris, and other materials in accordance with 202.02 or as otherwise approved in writing.

701.11 STUBBING AND PLUGGING PIPES. Construct pipe plugs with Class R concrete complying with Section 901. Thickness of plug and method of construction shall be as directed.

When stubbing new pipes are to be stubbed into new or existing pipes or other structures, make the connection with approved mortar complying with 1001.03.

701.12 MEASUREMENT.

1. The length of new and re-laid pipe will be measured in linear feet along the pipe from end to end unless stated otherwise.
2. Pipe tees, elbows, and other fittings will be measured per each fitting. The length of pipe in such fittings will be included in the pay length measurement of pipes of which they form a part.
3. Excavation required for pipe installation will not be measured for payment, except as otherwise specified in 203.14 and 701.12.10.
4. Furnishing and placing backfill material below existing ground level for pipes will not be measured for payment. Backfill material needed to complete backfill above natural ground and around pipes that extend above natural ground will be measured for payment under applicable earthwork items. When specifying flowable fill, measure for payment in accordance with Section 710.
5. Plugging and stubbing of pipes will not be measured for payment.
6. Cleaning existing pipes will be measured by the length of pipe cleaned and accepted.
7. Concrete collars will be measured per each.
8. Dewatering of excavated areas will not be measured for payment.

9. Special shoring and bracing (depth > 5 feet), needed in addition to OSHA requirements for trench safety, will be measured by the square foot of wall area.
10. Trench excavation safety protection (depth > 5 feet) will be measured by the length of trench having a depth > 5 feet below natural ground.

701.13 PAYMENT. Payment for concrete and metal pipe will be made at the contract unit price per linear foot of the types and sizes specified, which includes all labor, materials, equipment, tools, and incidentals necessary to complete the work.

When plastic pipe is shown on the plans or elected to be used by the contractor, payment will be made at the contract unit price per linear foot of the types and sizes specified in accordance with the payment schedule of Table 701-1.

Table 701-1
Payment Schedule for Plastic Pipe

Percent Payment	Stage of Completeness
75	After placement and backfill has been completed
25	After the pipe has met vertical deflection requirements in accordance with 701.09.1

Payment for fabricating pipe tees, elbows, and other fittings will be made at the contract unit price per each fitting.

When unstable conditions are encountered, the additional excavation will not be measured for payment; however, the additional materials furnished and placed for the pipe foundation will be measured and paid for as follows:

1. Granular Materials: Payment will be made under the embankment item. The net section volume of the materials will be multiplied by 3 to determine the pay volume. When the contract does not include a pay item for embankment, payment will be made in accordance with 104.02.
2. Bedding Material: Measurement and payment will be made in accordance with Section 726. When the contract does not include a pay item for bedding material, payment will be made in accordance with 104.02.
3. Trench Excavation Safety Protection: When excavation depths exceed 5 feet from natural ground, safety precautions for excavations in compliance with OSHA are required and will be paid per linear foot of trench. When the

contract does not include a pay item for trench excavation safety protection, payment will be made in accordance with 104.02.

Payment for cleaning existing pipes will be made at the contract unit price per cleaned linear foot.

Payment for concrete collars will be made at the contract unit price per each.

Payment for special shoring and bracing will be made at the contract unit price per square foot of wall area.

Payment will be made under:

Item No.	Pay Item	Pay Unit
701-01	Cross Drain Pipe	Linear Foot
701-02	Cross Drain Pipe Arch	Linear Foot
701-03	Storm Drain Pipe	Linear Foot
701-04	Storm Drain Pipe Arch	Linear Foot
701-05	Side Drain Pipe	Linear Foot
701-06	Side Drain Pipe Arch	Linear Foot
701-07	Yard Drain Pipe	Linear Foot
701-08	Relaying Pipe	Linear Foot
701-09	Pipe Fittings	Each
701-10	Reinforced Concrete Pipe (Extension)	Linear Foot
701-11	Reinforced Concrete Pipe Arch (Extension)	Linear Foot
701-12	Corrugated Metal Pipe (Extension)	Linear Foot
701-13	Corrugated Metal Pipe Arch (Extension)	Linear Foot
701-14	Cleaning Existing Pipes	Linear Foot
701-15	Concrete Collar	Each
701-16	Plastic Pipe (Extension)	Linear Foot
701-17	Trench Excavation Safety Protection (Depth >5 feet)	Linear Foot
701-18	Special Shoring and Bracing (Depth >5 feet)	Square Foot

Section 702
Manholes, Junction Boxes, Catch Basins, and End Treatments

702.01 DESCRIPTION. Construct, install, and adjust manholes, junction boxes, catch basins, culvert end treatments, and safety ends in accordance with these specifications and in conformity with lines and grades shown on the plans or established.

702.02 MATERIALS. Materials shall comply with the following sections and subsections:

Cast-in-Place Concrete (Class M)	901
Portland Cement	1001.01
Mortar Sand	1003.08.1
Sewer Brick	1018.12.1
Asphaltic Varnish	1008.03
Reinforcing Steel	1009.01
Precast Reinforced Concrete Drainage Units	1016
Frames, Grates, and Covers for Manholes, Catch Basins, and Junction Boxes	1013.05, 1013.06
Geotextile Fabric	1019

The contractor may furnish structures of either cast-in-place concrete or precast concrete units.

Use mortar complying with 1001.03. Use mortar within 30 minutes after mixing or as recommended by the manufacturer.

702.03 QUALITY ASSURANCE. Manufacturing plants will be inspected periodically for compliance with specified manufacturing methods. Material samples will be randomly obtained for laboratory testing for verification of manufacturing lots.

Materials will be subject to inspection at any time during the work.

702.04 CONSTRUCTION REQUIREMENTS. Construct all cast-in-place structures in dry or dewatered areas, unless otherwise directed. Provide dewatering, shoring and bracing needed to comply with OSHA requirements at no cost to the Department. Remove logs, stumps, and other undesirable material.

702.04.1 Manholes, Junction Boxes, and Catch Basins: Concrete construction shall conform to Section 805. Joints shall be full mortar joints no more than 1/2 inch wide. When specified, plaster outside faces of structures with 1/2 inch thick cement-sand mortar. Cure exposed surfaces of concrete and masonry in accordance with 805.10 for at least 48 hours.

Cast precast concrete units with the specified number and size of pipe openings required for the drainage system; however, if additional pipe is required during construction for which no openings have been supplied, make such openings, provided any damaged units are replaced or satisfactorily repaired. Set precast units to established grade within ± 1/2 inch. Seal joints for sectional precast units with flexible plastic gasket material complying with 1016.01.1 and install to form a watertight seal. Wrap the joints of precast units with geotextile fabric a minimum of 18 inches on each side of the joint. Lap the ends of the fabric at least 10 inches. Secure the edges and ends of the cloth.

Set metal frames in a full mortar bed. Conduit sections shall be flush on the inside of structure wall and project outside sufficiently for proper connection with the next conduit section. Fit masonry neatly and tightly around conduit.

When grade adjustments of existing structures are specified, remove the frames, covers, and gratings and reconstruct the walls as required. Clean the frames and reset at required elevation. Thoroughly clean metal parts and place in good repair. In lieu of resetting structures, structures may be adjusted by means of approved metal adjustment rings.

Clean new structures of silt, debris or other foreign matter. Coat non-galvanized metal parts of new or adjusted structures with asphaltic varnish meeting the requirements of 1008.03 or jet black metal work paint satisfactory to the engineer.

Backfill the structure in accordance with 701.08.

Dispose of excavated material not satisfactory for backfill and surplus material in accordance with 202.02.

702.04.2 Culvert End Treatments: Construct culvert end treatments to control erosion at the ends of cross drains and side drains in accordance with these specifications, the plans, and as directed. Submit designs other than those shown on the plans for approval.

702.04.2.1 Concrete Toe Wall Placement: Cast-in-place toe walls shall conform to 805.05 and plan details.

702.04.2.2 Geotextile Fabric Placement: Place geotextile fabric in accordance with 712.03.1.

702.04.2.3 Sacked Concrete (Wet-Batched) Placement:

Revetment: Wet-batched sacked concrete revetments shall conform to the requirements of Section 712. Begin placement of sacked concrete at the toe of the revetment and progress to the end of the pipe. Comply with the compressive strength requirements of Section 901 for Class R concrete.

Toe Wall: Stack sacks as indicated on the plans.

702.04.2.4 Sacked Concrete (Dry-Batched) Placement:

Revetment: Dry-batched sacked concrete revetments shall conform to the requirements of Section 712. Begin placement at the toe of the revetment and progress to the end of the pipe. Submit a certificate of compliance from the supplier of the dry-batched revetment with each shipment showing the proportions of cement and sand used (or other approved aggregates). Mix the contents of the package with water as required to produce a slump of 2 to 5 inches. Comply with the compressive strength requirements of Section 901 for Class R concrete.

Toe Wall: Stack sacks as indicated on the plans.

702.04.2.5 Stone Placement: Stone revetment shall conform to the requirements of Section 712.

702.04.3 Culvert Safety Ends: Furnish and install safety ends on cross drains and side drains in accordance with these specifications, the plans, and as directed. Submit designs other than those shown on the plans for approval.

Fabricate and place reinforcing steel in accordance with Section 806.

Cast-in-place or precast concrete shall comply with Section 805.

Bolt pipe runners in place as shown on the plans. Cast bolts into the plastic concrete or place in approximately 1-inch diameter holes and epoxy in place using an Approved Materials List anchor system as directed.

702.04.4 Frames, Grates, and Covers for Manholes, Catch Basins, and Junction Boxes: Metal units shall comply with the following requirements:

1. Gray and ductile iron castings shall comply with 1013.06.1.
2. Steel castings shall comply with 1013.05.
3. Structural steel shall comply with 1013.01 and rivet steel shall comply with 1013.02.
4. Galvanizing shall comply with ASTM A123.

702.05 MEASUREMENT. Measure new and adjusted junction boxes, manholes, catch basins, culvert end treatments, and safety ends per each. Excavation and backfill required for installation of these units will not be measured for payment. Dewatering, shoring and bracing needed to meet OSHA requirements are considered incidental to the work will not be measured for payment.

702.06 PAYMENT. Payment for new and adjusted junction boxes, manholes, catch basins, culvert end treatments and safety ends will be made at the contract unit price per each which will include all materials, tools, equipment, labor and incidentals necessary to complete the work.

The concrete in cast-in-place manholes, junction boxes, catch basins, and culvert end treatments and safety ends will be identified by lots and will be subject to pay adjustments in accordance with Table 901-5 and Note 1 therein. Acceptance for each precast concrete manhole, junction box, and catch basin lot will be in accordance with the requirements of Standard Plan PC-01. Size, sampling, and testing of each concrete lot shall be in accordance with the Materials Sampling Manual.

Payment will be made under:

Item No.	Pay Item	Pay Unit
702-01	Junction Boxes	Each
702-02	Manholes	Each
702-03	Catch Basins	Each
702-04	Adjusting _____	Each
702-05	Cross Drain End Treatment	Each
702-06	Side Drain End Treatment	Each
702-07	Cross Drain Safety End	Each
702-08	Side Drain Safety End	Each

Section 703
Underdrain Systems

703.01 DESCRIPTION. Construct pipe underdrain systems in accordance with these specifications and in conformity with lines and grades shown on the plans or established.

703.02 MATERIALS. Materials shall comply with the following sections and subsections:

Asphalt Concrete	502
Portland Cement Concrete (Class M)	901
Aggregate Backfill (Size 3) (Crushed or Uncrushed)	1003.07
Granular Material (Backfill)	1003.09
Perforated and Non-perforated Underdrain Plastic Pipe	1006.01
Perforated Bituminous Coated Corrugated Steel Pipe	1007.03
Perforated Corrugated Aluminum Pipe	1007.06
Reinforcing Steel	1009.01
Precast Concrete Headwalls	1016.06
Hardware Cloth Screen	1018.05
Geotextile Fabric	1019.01
Geocomposite Drains	1019.02

Furnish including plastic pipe when an item for "Shoulder Outlet Underdrains" in the contract.

When including an item for "Perforated Pipe Underdrains" in the contract, furnish any of the perforated plastic pipe types, unless otherwise specified.

When including an item for "Non-perforated Pipe Underdrains" in the contract, furnish any of the non-perforated plastic pipe types, unless otherwise specified.

At the Department's discretion, pipe plants will be inspected periodically for compliance with specified manufacturing methods. Material samples will be obtained for laboratory testing for acceptance of manufacturing lots.

703.03 CONSTRUCTION REQUIREMENTS.

703.03.1 Plastic Pipe Shoulder Underdrains: Install plastic pipe underdrains, aggregate backfill, and shoulder base replacement and surfacing immediately following trenching operations. When permitting

traffic on the roadway, conduct operations so that no trench will be open at the end of the day. Perform operations in such a manner that existing pavement, shoulder surfacing, and base course outside the limits of underdrain trenches are not damaged.

703.03.1.1 Trenching: When existing surfaced shoulders are not to be overlaid with asphalt concrete under the current contract, cut existing shoulder surfacing full depth along the edges of the proposed trench prior to beginning trenching operations. Excess excavated materials may be spread on embankment slopes when permitted. Dispose of removed materials considered unacceptable for spreading on slopes in accordance with 202.02.

703.03.1.2 Geotextile Fabric: Line completed trenches for perforated plastic pipe with geotextile fabric. Splice adjoining sheets of fabric by lapping a minimum of 18 inches and satisfactorily securing. Sewn or heat-bonded splices may be used. Place a sufficient width of fabric in the trench to permit the cloth to lap over the top of the trench for the full width of trench. During placement of geotextile fabric, pipe and backfill, take care to avoid damaging geotextile fabric. Satisfactorily repair or replace any damaged geotextile fabric at no direct pay.

703.03.1.3 Plastic Pipe Installation: Place plastic pipe under-drain in the trench immediately adjacent to the pavement or shoulder edge as shown on the plans. Fittings and materials necessary to make splices of the plastic pipe under-drain and to make connections of the plastic pipe under-drain to the non-perforated outlet pipe shall be from the same manufacturer as the pipe. Fittings shall be designed to prevent soil or aggregate intrusion into the under-drain or outlet piping. When terminating the under-drain without an outlet, provide a fitting or use other approved methods to prevent soil or aggregate intrusion into the end of the under-drain.

703.03.1.4 Aggregate Backfill: After pipe installation, backfill the trench without displacement or damage to the pipe. Uniformly compact aggregate backfill for perforated pipe with approved vibratory equipment to the satisfaction of the engineer. Place aggregate backfill in lifts no greater than 10 inches of uncompacted thickness. Leave the backfilled and compacted trench in a condition ready to receive surfacing. Lap the geotextile fabric over the full width of the trench at the top of the final backfill and secure by an approved method.

703.03.1.5 Replacement of Base Course and Surfacing: Use asphalt concrete for replacement of removed shoulder base course and surfacing as shown on the plans and construct in accordance with Section 510.

703.03.2 Shoulder Outlet Underdrain: Install the non-perforated plastic pipe, backfill, and replacement of shoulder base and surfacing immediately behind trenching operations. When permitting traffic on the roadway, conduct operations so that no trench will be open at the end of the day. Perform operations in such a manner that the existing pavement, shoulder surfacing, and base course outside the limits of the trenches are not damaged.

703.03.2.1 Trenching: When existing surfaced shoulders are not to be overlaid with asphalt concrete under the current contract, cut existing shoulder surfacing full depth along the edges of the proposed trench prior to beginning trenching operations. When permitted, spread excess excavated materials on embankment slopes. Dispose of removed materials considered unacceptable for spreading on slopes outside the right-of-way in accordance with 202.02.

703.03.2.2 Non-perforated Plastic Pipe Installation: Place non-perforated plastic pipe in the trench and connect to plastic pipe in accordance with manufacturer's recommendations. The pipe shall comply with the requirements of 1006.02.

703.03.2.3 Backfill: After pipe installation, backfill the trench without displacing or damaging the pipe. Use excavated trench material that meets the requirements for granular material as backfill. When requiring additional material, provide granular material at no direct pay. Place the backfill material in lifts no greater than 6 inches of uncompacted material. Uniformly compact backfill material by approved methods to the satisfaction of the engineer. Leave the backfilled and compacted trench in a condition ready to receive surfacing.

703.03.2.4 Replacement of Base Course and Surfacing: Use asphalt concrete for replacement of removed shoulder base course and surfacing as shown on the plans and construct in accordance with Section 510.

703.03.2.5 Headwalls: Portland cement concrete headwalls for non-perforated pipe shall be cast-in-place or precast constructed in accordance with Section 702. Furnish each outlet pipe with a rodent screen as shown on the plans.

703.03.3 Perforated or Non-perforated Pipe Under-drain: Use perforated or non-perforated pipe under-drain as shown on the plans to drain wet areas. Install the under-drains and backfill immediately following trenching operations.

703.03.3.1 Trenching: Excavate the trenches to the specified dimensions and grade or as directed. Unless otherwise specified, place the bedding material layer a minimum of 3 inches thick and compact in the bottom of the trench for its full width and length. Dispose of excess excavated material in accordance with 202.02.

703.03.3.2 Under-drain Pipe: Embed under-drain pipe firmly in the bedding material and join securely with appropriate coupling fittings or bands. When specified, wrap perforated pipe with geotextile fabric in accordance with plan details or as directed. Cap upgrade ends of pipe to prevent soil intrusion.

703.03.3.3 Backfill: Place specified backfill as shown on the plans or as directed.

703.03.4 Geocomposite Wall Drains: Before structural backfilling, place geocomposite wall drains against the structure as shown on the plans. Place the drains to accomplish drainage of the backfill without soil intrusion into the drainage product core or outlet piping. Place and compact the backfill in accordance with Section 802 without displacing or damaging the geocomposite wall drain.

Use fittings and materials from the same manufacturer to make splices and connections of the drainage product core to the outlet piping. When the sides of the product are terminated, fold the fabric under to prevent soil intrusion into the end of the drainage product. Overlap the fabric a minimum of 6 inches at all seams.

703.04 MEASUREMENT.

703.04.1 Shoulder Under-drains: Shoulder under-drains will be measured by the linear foot along the pavement or shoulder edge. Required excavation, geotextile fabric, restoration of shoulder base course and surfacing, and disposal of excavated materials will not be measured for payment.

703.04.2 Shoulder Outlet Under-drains: Shoulder outlet under-drains will be measured per each outlet under-drain installation. Required excavation, plastic pipe and fittings, backfill, replacement of shoulder base course and surfacing, concrete headwalls, rodent screens, and disposal of excavated materials will not be measured for payment.

703.04.3 Perforated or Non-perforated Pipe Under-drains: Perforated and non-perforated pipe under-drains will be measured by the linear foot of under-drain pipe. Required excavation, bedding, backfill, and geotextile fabric will not be measured for payment.

703.04.4 Geocomposite Wall Drains: Geocomposite wall drains will be measured by the square yard of geocomposite wall drain.

703.05 PAYMENT. Payment for under-drains will be made at the contract unit prices, which includes all labor, materials, equipment, tools, and incidentals necessary to complete the work.

Pay adjustments for portland cement concrete in accordance with Section 901 will not apply.

Payment will be made under:

Item No.	Pay Item	Pay Unit
703-01	Shoulder Under-drains	Linear Foot
703-02	Shoulder Outlet Under-drains	Each
703-03	Perforated Pipe Under-drains	Linear Foot
703-04	Non-perforated Pipe Under-drains	Linear Foot
703-05	Geocomposite Wall Drains	Square Yard

Section 704
Guardrail

704.01 DESCRIPTION. Furnish and construct highway guardrail in accordance with these specifications, plan details, the manufacturer's recommended procedures, and other requirements as directed by the engineer.

704.02 MATERIALS. Materials shall comply with the following sections and subsections.

Portland Cement Concrete (Class A1)	901
Reinforcing Steel	1009
Metal Beam Guardrail	1010.09
Guardrail Posts and Blockout	1010.10
Guardrail Hardware	1010.11
Wire Rope and Fittings for Highway Guardrail	1010.12

Welding shall comply with Section 815.

704.03 GENERAL CONSTRUCTION REQUIREMENTS.

704.03.1 Posts: Align posts and set plumb. When driving of posts is permitted, do not damage posts. Backfill post holes with acceptable material placed and compacted as directed. When posts are to be placed within existing surfaced areas, replace surface material as shown on the plans.

704.03.2 Rail Elements: Erect rail elements in a manner resulting in a smooth, continuous installation. Tighten all bolts, except adjustment bolts. Furnish bolts of sufficient length to extend beyond nuts. Field drill or punch holes for special details when approved. Repair damaged galvanized surfaces and drilled holes in accordance with 811.08.

704.03.3 Anchor Blocks: Reinforced concrete blocks for anchoring guardrail to existing bridge ends shall meet the requirements of Sections 805 and 806. Use Class A1 concrete complying with Section 901. Remove portions of existing bridge railings and drill holes into existing railings when required without damaging the remaining railings. Satisfactorily repair damage to the existing bridge due to operations at no additional cost to the Department. Dispose of removed materials of in accordance with 202.02.

704.03.4 Guardrail End Treatments: All guardrail end treatments shall have been successfully crash tested in compliance with the crash test requirements of the *National Cooperative Highway Research Program (NCHRP) Report 350* or the *AASHTO Manual for Assessing Safety Hardware (MASH)* at a Test Level 3 (TL-3) unless noted otherwise on the plans. Do not use end treatment systems not in compliance with this requirement on any Department project.

The contractor shall select the end treatment system from the Approved Materials List unless noted otherwise on the plans, but shall not use a combination of such end treatment systems on the same project. The contractor shall submit the selected system to the Project Engineer, which includes the system name, system drawings, the manufacturer of the end treatment system, and all necessary documentation to substantiate that the end treatment is in compliance with the NCHRP 350 or MASH requirement for review. The selected system shall not be installed until the system submittal has been reviewed by the Project Engineer.

The contractor shall install all components of the guard rail end treatment system such as posts, blocks, and hardware in accordance with the drawings and the manufacturer's recommendations. Under no circumstances shall any component of the guard rail end treatment system be modified without written approval.

All end treatments shall bear a label indicating the manufacturer and exact product name of the end treatment along with its assigned NCHRP or MASH test level. This label shall resist weathering and shall be permanently affixed to the railing in such a way as to be readily visible.

Furnish all end treatments with retroreflective sheeting at the terminal end as shown on the plans.

704.04 MEASUREMENT. Quantities of guardrail, anchor sections, end treatments, and transitions for payment will be the design quantities in linear feet shown on the plans and adjustments thereto. Design quantities will be adjusted if the engineer makes changes to adjust to field conditions, if plan errors are proven, or if design changes are made.

Design quantities of single faced guardrail are based on plan length along the face of rail between end posts, exclusive of openings, and plan length of end sections. Design quantities of double faced guardrail are based on plan length between end posts along centerline of posts, exclusive of openings, and plan length of end sections. Design quantities of trailing end and anchor sections are based on plan length along the face of rail.

Guardrail anchor blocks and end treatments will be measured per each unit furnished and installed.

704.05 PAYMENT. Payment for guardrail, anchor sections, anchor blocks, end treatments, and transitions will be made at the contract unit prices per linear foot, which include drilling of holes in existing concrete for reinforcing steel dowels, concrete, and reinforcing steel and all labor, materials, equipment, tools, and incidentals necessary to complete the work.

Payment adjustments for portland cement concrete in accordance with Section 901 will not apply.

Payment will be made under:

Item No.	Pay Item	Pay Unit
704-01	Guardrail	Linear Foot
704-02	Guardrail (Double Faced)	Linear Foot
704-03	Blocked Out Guard Rail	Linear Foot
704-04	Blocked Out Guard Rail (Double Faced)	Linear Foot
704-05	Guardrail Anchor Sections (Trailing End)	Linear Foot
704-06	Guardrail Bridge Attachments	Linear Foot
704-07	Guardrail Transitions	Linear Foot
704-08	Guardrail Anchor Sections (Turndown)	Linear Foot
704-09	Guardrail Anchor Blocks	Each
704-10	Guardrail End Treatment	Each

Section 705
Fences

705.01 DESCRIPTION. Construct fences and gates in accordance with these specifications and in conformity with lines and grades shown on the plans or established by the engineer.

705.02 MATERIALS. Materials shall comply with the following section and subsections:

Portland Cement Concrete (Class R)	901
Barbed Wire	1010.01
Woven Wire	1010.02
Posts and Braces for Field and Line Type Fence	1010.03
Staples and Nails	1010.04
Metal Fasteners for Steel Posts	1010.05
Gates for Field and Line Type Fence	1010.06
Chain Link Fence, Gates and Appurtenances	1010.07
Timber Preservatives	1014.03
Ground Rod Assemblies	1010.08

Use the same type chain link fencing throughout the project. Use the same type, shape, and treatment of posts throughout a section of fence.

705.03 GENERAL CONSTRUCTION REQUIREMENTS. Conform to Section 201 when clearing and grubbing for fence installation.

Confine operations to the area adjacent to right-of-way lines and within the right-of-way.

Where breaks in a run of fencing are required, and at intersections with existing fences, make appropriate adjustment in post spacing for the type closure indicated.

Place wood posts with small end up. When posts, braces, or anchors are to be embedded in concrete, install temporary braces as required to hold posts in proper position until concrete has set sufficiently to hold posts. Do not install fencing material on posts or place strain on bracing set in concrete for 72 hours after concrete has been placed. Set tops of posts to required grade and alignment. Cutting of wood post tops will be allowed only when approved. Treat cut ends with 2 applications of the same type preservative used for post treatment. Stretch wire taut.

Install ground rods along each segment of new or rebuilt fence, regardless of type fence post used, at maximum 500-foot intervals. Ensure that ground rods and connections conform to plan details.

705.04 REBUILT FENCE. When specified, take down, move back, and rebuild existing fence. Rebuild fence in the same manner as specified for new fence. Rebuilt ornamental fence, picket fence, or other special type fence shall be equal in all respects to existing fence.

705.05 GATES. Gates of a design different from that shown on the plans may be furnished with prior approval. Gates shall be of rigid construction, and after erection, gates shall not show sag or warp.

705.06 CHAIN LINK FENCE AND GATES.

705.06.1 Concrete Post Anchorage: Anchor posts in Class R concrete footings. Portable mixing of concrete in accordance with 901.10.6 will be permitted for small quantities of concrete.

Extend tops of footings slightly above ground and steel trowel to a smooth finish sloped to drain away from posts. Center posts, braces, and other units in footings.

Perform concrete operations in accordance with Section 901. Consolidate concrete by tamping or vibrating. Satisfactorily dispose of excess excavation from footings.

705.06.2 Fence Erection: Place pull posts no more than 200 feet apart in straight runs and at each vertical angle greater than 20 degrees. Place corner posts at each horizontal angle greater than 20 degrees. Provide corner and pull posts with a horizontal brace and tie rod on each side of posts. Connect the horizontal brace and tie rod to adjacent line posts.

Before placing fabric, permanently position posts, firmly set anchorages, and satisfactorily secure top rail or tension wires to posts. Secure ends of fabric by stretcher bars threaded through loops of fabric and secure to posts by clamps with bolts and nuts.

Place fabric by securing one end and applying sufficient tension to remove all slack before making attachments elsewhere. Assure that degree of tensioning is commensurate with air temperatures at time of installation to prevent undue sagging or tensioning of fabric due to changing temperatures. Fasten fabric to line posts at approximately equal spaces and to top rail (or top tension wire) and bottom tension wire with tie wires or bands as specified.

705.06.3 Gate Erection: Gate installation shall include gate frames, stretcher bars, filler fabric, latches, stops, locking device, padlocks, hinges, gate posts with braces, tie rods, turnbuckles, caps, and other fittings as specified or required for complete installation.

Clamps for attaching hardware shall be tightened. Bottom of gates shall clear the ground at least 3 inches at all points in its swing. Grade the area if necessary to meet this requirement. Provide stops with latches or other approved means for holding the gate open and place to prevent damage to gate or fence by over-swing. Unless otherwise directed, provide stops at the centerline of fence to arrest the swing of a closed gate.

705.06.4 Repair of Protective Coatings: After completion of the fence and gate installation, satisfactorily repair all damaged protective coatings in accordance with 811.08.

705.07 MEASUREMENT.

705.07.1 New Fence and Gates: The new fence will be measured by the linear foot between outside of end posts for each continuous run of fence, exclusive of gates. Gates for new fences will be measured per each for single swinging gates and per double gate for double swinging gates.

705.07.2 Rebuilt Fence: Rebuilt fences will be measured by the linear foot between outside of end posts for each continuous run of fences, including gates.

705.07.3 Intersecting Fences: Sections of new fences required for connections of existing intersecting fences to new or rebuilt fences will be included in the measurement of the new or rebuilt fences.

705.07.4 Ground Rod: Ground rod placement will not be measured for payment.

705.08 PAYMENT. Payment for fences and gates will be made at the contract unit prices, which will include all labor, materials, tools, equipment, and incidentals, including hardware necessary to complete the work. Payment adjustments for portland cement concrete in accordance with Section 901 will not apply.

Payment will be made under:

Item No.	Pay Item	Pay Unit
705-01	Barbed Wire Fence	Linear Foot
705-02	Combination Mesh and Barbed Wire Fence	Linear Foot
705-03	Single Swinging Walk Gates	Each
705-04	Single Swinging Driveway Gates	Each
705-05	Double Swinging Driveway Gates	Double Gate
705-06	Chain Link Fence	Linear Foot
705-07	Single Gates for Chain Link Fence	Each
705-08	Double Gates for Chain Link Fence	Double Gate
705-09	Rebuilt Fence	Linear Foot

Section 706
Concrete Walks, Drives, and Incidental Paving

706.01 DESCRIPTION. Furnish and construct portland cement concrete walks, handicapped curb ramps, drives and incidental paving slabs in accordance with these specifications and in conformity with lines, grades, and dimensions shown on the plans or established.

706.02 MATERIALS. Materials shall comply with the following sections or subsections:

Portland Cement Concrete (Class M)	901
Joint Filler	1005.01.3
Reinforcing Steel	1009.01
Curing Materials	1011.01

706.03 CONSTRUCTION REQUIREMENTS.

706.03.1 Excavation: Excavate to required depth and width. Shape the top of the subgrade and compact to a firm, even surface conforming to the section shown on the plans. Remove unsuitable material and dispose of in accordance with 202.02 and replace with approved material at no direct pay.

706.03.2 Forms: Forms shall be of wood or metal and shall extend the full depth of concrete. Forms shall be straight, clean, and of sufficient strength to resist the pressure of concrete. Brace forms to ensure that forms remain in horizontal and vertical alignment until their removal.

Concrete may be placed by slip-form methods. Place slip-formed concrete with an approved machine designed to spread, vibrate, consolidate, and finish concrete in one pass of the machine with a minimum of hand finishing. Rigidly hold sliding forms together to prevent spreading of forms. After the passing of the side forms, there shall be no noticeable slumping of concrete.

706.03.3 Subgrade: Thoroughly moisten the subgrade immediately prior to placing concrete.

706.03.4 Placing and Finishing: Place the concrete on the subgrade, strike-off to required thickness, and tamp sufficiently to bring the mortar to the surface. Finish the surface with a wood float or steel trowel

followed by brushing to a slightly rough finish. Round joints and edges with an edging tool having a 1/4 inch radius.

706.03.5 Joints:

706.03.5.1 Expansion Joints: Fill expansion joints with 1/2 inch thick preformed expansion joint filler. Install expansion joints at maximum 100-foot intervals, and between intersecting paving and any fixed structure, such as a building, bridge, or curbing, and between intersecting paving and the handicapped curb ramps. Extend expansion joint material for the full width and depth of paving.

706.03.5.2 Weakened Plane: Form weakened planes by a jointing tool or other acceptable means. Extend weakened planes into concrete for at least one-quarter of the depth. Weakened planes shall be approximately 1/8 inch wide.

706.03.5.2.1 Walks: Space weakened planes for walks equal to the width of the walk.

706.03.5.2.2 Drives: Form a longitudinal weakened plane along the centerline of drives more than 16 feet wide. Form transverse weakened planes at not more than 16-foot intervals.

706.03.5.2.3 Incidental Paving: Form weakened planes for incidental paving at intervals not exceeding 30 times the thickness of the concrete in length or width. Construct joints in incidental paving placed adjacent to jointed concrete to match existing joints, with intermediate joints formed as necessary not to exceed the maximum joint spacing.

706.03.5.3 Construction Joints: Form construction joints around manholes, utility poles, etc., extending into paving. Install 1/4 inch thick preformed expansion joint filler into these joints.

706.03.5.4 Tie-ins: Make tie-ins of existing concrete by full depth sawing at no direct pay.

706.03.6 Curing: Cure concrete in accordance with 601.03.10.

706.03.7 Detectable Warning Surface for Handicap Ramps and At-Grade Sidewalk Intersections: When sidewalks intersect with roadways, equip the sidewalk with a detectable warning system consisting of raised truncated domes as a transition between the sidewalk and the street as required by the Americans With Disabilities Act, 28 CFR § Part 36, ADA Standards for Accessible Design. Install detectable warnings (truncated domes) on the ramp surface over the full width of the ramp throat for a distance of 24 inches in the direction of travel from the back of the curb. Also install detectable warnings (truncated domes) on at-grade sidewalks intersecting with roadways for a distance of 36 inches in the direction of

travel from the end of the sidewalk. Detectable warning surfaces may be added to at-grade sidewalks intersecting with driveways at the discretion of the design section or Project Engineer. Lay out truncated domes on a square grid in order to allow enough space for wheelchairs to roll between the domes.

Light reflectance of the truncated domes and the underlying surface shall meet the 70 percent contrast requirement of ADAAG.

706.04 MEASUREMENT. Quantities of concrete walks, drives, and incidental paving slabs for payment will be the design quantities as specified on the plans and adjustments thereto. Design quantities will be adjusted if the engineer makes changes to adjust to field conditions, if design errors are proven or if design changes are made. Design areas are based on the horizontal dimensions shown on the plans. Excavation, backfill, reinforcing steel, and joint materials will not be measured for payment.

Handicapped curb ramps, including the detectable surface warning system, will be measured per each.

Detectable surface warning systems for at-grade sidewalk intersection will not be measured for payment.

706.05 PAYMENT. Payment for concrete walks, drives, and incidental paving will be made on a lot basis at the contract unit price per square yard, adjusted in accordance with the following provisions. Payment for each lot will be made in accordance with table 901-5. Size, sampling, and testing of each concrete lot shall be in accordance with the materials sampling manual.

Payment for handicapped curb ramps, including the detectable surface warning system, will be made at the contract unit price per each and shall include, but not be limited to, curb transitions, detectable warning system, gutter, landing, and base.

Payment will be made under:

Item No.	Pay Item	Pay Unit
706-01	Concrete Walk	Square Yard
706-02	Concrete Drive	Square Yard
706-03	Incidental Concrete Paving	Square Yard
706-04	Handicapped Curb Ramps	Each

Section 707
Curbs and Gutters

707.01 DESCRIPTION. Furnish and construct curbs and gutters in accordance with these specifications and in conformity with lines, grades, dimensions, and typical sections shown on the plans or established.

707.02 MATERIALS. Materials shall comply with the following sections and subsections:

Usable Soil	203.06.1
Asphalt Concrete	502
Portland Cement Concrete (Class A1, B, D)	901
Asphalt Cement	1002
Aggregates	1003
Joint Fillers	1005.01
Joint Sealant	1005.02
Joint Seals	1005.03
Curing Materials	1011.01
Form Release Agent	1018.06

707.02.1 Concrete Curbs and Gutters: Use the same type of concrete for curbs and gutters as used throughout the project, unless shown otherwise on the plans.

707.02.2 Asphalt Concrete Curbs: Use Asphalt Concrete (Level A) mixtures for asphalt concrete curbs in accordance with Section 502.

707.03 SUBGRADE. Shape the subgrade and compact to a firm, even surface. When possible, shape the subgrade and compact at the same time and in the same manner as the subgrade for the pavement. Remove unsuitable material and replace with approved material at no direct pay.

707.04 CONCRETE FORMS. Use forms for combination curb and gutter conforming to 601.03.1.8 and 601.03.5. Forms for other curbs or gutters shall be wood or metal, straight, and of sufficient strength to resist pressure of the concrete without deforming. Clean forms and coat with form release agent before concrete is placed against them. Do not use forms that

are excessively worn, bent, or broken. An approved mechanical curb forming machine conforming to 707.06.3 may be used without forms.

707.05 CONCRETE JOINTS. Form joints in integral curbing to correspond with transverse joints in the pavement slab. Extend joints under and through the curb; finish and fill with the specified filler.

Form other types of curbing with 1/4 inch joints at maximum intervals of 20 feet. Form by using steel plates 1/4 inch thick, cut to section, and set vertically in forms until concrete has set sufficiently to permit removal of plates.

Tie-ins of existing concrete curbs and gutters shall be made by full depth sawing at no direct pay.

707.06 PLACING CONCRETE.

707.06.1 Integral Types: After concrete pavement has been struck off, clamp the curb forms or otherwise securely fasten in place on the slab form. Place concrete for curbing and thoroughly tamp within 30 minutes after pavement has been finished. Spade or sufficiently vibrate concrete to eliminate voids and tamp to bring mortar to the surface. Finish the concrete smooth and even with a wooden float. Round edges to the specified radius with an approved finishing tool. Take care to ensure that the pavement and curb are constructed monolithically.

Integral type curb may be placed after completion of pavement, provided steel reinforcement is placed in the pavement of the size, type, and spacing shown on the plans at no direct pay.

707.06.2 Non-Integral Types: Place concrete on the prepared subgrade, strike off, and consolidate to required thickness. Spade or sufficiently vibrate concrete to eliminate voids and tamp to bring mortar to the surface. Finish smooth and even with a wooden float. Round edges to the specified radius.

707.06.3 Slip-formed Concrete: Slip-formed concrete shall have uniform consistency. Place with an approved extrusion machine designed to spread, consolidate, and finish concrete in one pass of the machine with minimum hand finishing. Rigidly hold sliding forms together to prevent spreading of forms. After the passing of the forms there shall be no noticeable slumping of concrete. Finished concrete shall be free from voids. Perform any additional finishing required immediately after placement.

When slip-formed methods are used, concrete for curbs and gutters shall have no more than a 1-1/2 inch slump.

707.06.4 Tolerances: Do not exceed the theoretical grade of combination curb and gutter nor be more than 1/2 inch low.

707.07 FINISHING. Remove forms within 24 hours after concrete has been placed. Fill honeycombed areas and other minor defects with mortar, complying with 1001.03. Plastering will not be permitted on faces of curb or gutter. Remove and replace rejected curb or gutter. Finish the top and face of curb or gutter prior to initial set with a wood float, brush, and water.

707.08 ASPHALT CONCRETE CURB. Place asphalt concrete curb with an approved extruding machine. Prior to placing curb, apply asphalt tack coat complying with Section 504.

707.09 CURING CONCRETE CURB OR GUTTERS. After finishing, cure curb or gutter in accordance with 601.03.10.

707.10 BACKFILLING. After curb or gutter has set sufficiently, backfill adjacent to curb or gutter with usable soil complying with 203.06.1 compacted to the density of surrounding soil.

707.11 MEASUREMENT.

Quantities of curbs and/or gutters for payment will be the design lengths as specified on the plans and adjustments thereto. Design quantities will be adjusted if the engineer makes changes to adjust to field conditions, if design errors are proven, or if design changes are made. Excavation, backfill, joint materials, asphalt tack coat, and steel tie bars will not be measured for payment. When combination curb and gutter is specified, gutters required at catch basins will be included in design quantities for combination curb and gutter.

707.12 PAYMENT. Payment for curbs and/or gutters will be made at the contract unit price per linear foot, subject to the following provisions:

707.12.1 Asphalt Concrete Mixtures: Asphalt concrete curbs will be subject to the payment adjustment provisions of Section 502. Asphalt cement shall comply with the requirements of Section 1002. The Materials and Testing Section will provide the payment adjustment percentage for properties of asphalt cement.

707.12.2 Portland Cement Concrete: The portland cement concrete in the curbs and/or gutters will be identified by lots and shall be subject to payment adjustments per linear foot in accordance with Table 901-5. Size, sampling, and testing of each concrete lot shall be in accordance with the Materials Sampling Manual.

Payment will be made under:

Item No.	Pay Item	Pay Unit
707-01	Concrete Curb	Linear Foot
707-02	Concrete Gutter	Linear Foot
707-03	Combination Concrete Curb and Gutter	Linear Foot
707-04	Asphalt Concrete Curb	Linear Foot

Section 708
Right-of-Way Monuments

708.01 DESCRIPTION. Install contractor furnished right-of-way monuments and right-of-way monument witness posts at various locations in accordance with these specifications, the project right-of-way map, the plan details, or as directed.

708.02 MATERIALS.

708.02.1 Right-of-Way Monuments: Right-of-way monuments shall be the type shown on the plans or an approved equal. Substitutions must be approved by the Location and Survey Section Administrator.

Furnish steel stakes, 3/4 inch x 3/4 inch x 2 feet, with stainless steel identification caps as shown on the plans.

708.02.2 Right-of-Way Monument Witness Posts: Witness posts shall be standard 6 feet in length as shown on the plans or an approved equal. Substitutions must be approved by the Location and Survey Section Administrator. The standard DOTD decal logo as shown on the plans shall be attached to each post by the supplier.

708.03 GENERAL CONSTRUCTION REQUIREMENTS. Position and set right-of-way monuments by or under the responsible charge of a Louisiana licensed professional land surveyor. Prepare a reproducible final plat reflecting the surveyor's location of the monuments in accordance with the right-of-way map on standard size Department plan sheet(s). Submit the final plat to the project engineer for forwarding to the Location and Survey Section Administrator. Record the final plat in the appropriate parish courthouse(s) and provide a copy of the filing receipt(s) to the project engineer. Also provide a copy of the final plat to the appropriate parish engineer(s) and Planning Commission(s), if applicable.

708.04 MEASUREMENT. Right-of-way monuments will be measured per each. Right-of-way monument witness posts will be measured per each.

708.05 PAYMENT. Payment for right-of-way monuments and right-of-way monument witness posts will be made at the contract unit price per each.

Payment will be made under:

Item No.	Pay Item	Pay Unit
708-01	Right-of-Way Monument	Each
708-02	Right-of-Way Monument Witness Post	Each

Section 709
Steel Cattle Guards

709.01 DESCRIPTION. Construct, furnish, and install welded steel cattle guards at the locations shown on the plans and conforming to plan details and these specifications.

Cattle guards of types different from those shown on the plans may be furnished with prior approval.

709.02 MATERIALS. Materials shall comply with the following sections and subsections:

Concrete (Class M)	901
Steel Pipe (Wingwalls)	1007.11
Reinforcing Steel	1009.01
Bolts, Nuts and Washers	1010.11
Treated Timber	1014

Use the minimum size steel specified and fabricate in accordance with Section 809. Pipe wings shall be 2-inch diameter standard strength steel pipe. Paint steel in accordance with Section 811. Galvanized pipe will not require painting. Repair damaged galvanized steel in accordance with 811.08.

709.03 CONSTRUCTION REQUIREMENTS. Extend excavation a minimum of 12 inches outside neat lines of concrete walls or footings. Deposit backfill in layers not exceeding 6 inches compacted thickness and compact each layer to the density of adjacent soil with mechanical tampers. When placing the cattle guard in the roadway, the compaction requirements shall conform to 203.07.

Place concrete and reinforcing steel in accordance with Sections 805 and 806.

709.04 MEASUREMENT. Steel cattle guards will be measured per each unit. Excavation, backfill, concrete, and reinforcing steel will not be measured for payment.

709.05 PAYMENT. Payment for steel cattle guards will be made at the contract unit price per each. The concrete placed in cattle guards will be identified by lots and shall be subject to pay adjustments in accordance with Table 901-5 and Note 1 therein. Size, sampling, and testing of each concrete lot shall be in accordance with the materials sampling manual.

Payment will be made under:

Item No.	Pay Item	Pay Unit
709-01	Steel Cattle Guard	Each

Section 710
Flowable Fill

710.01 DESCRIPTION. Furnish, place, and consolidate a controlled low strength flowable fill as an alternative to compacted soil. Applications for this material include, but are not limited to, general backfilling of drainage structures, entrenchments across pavements, encasements, beddings, void filling, and other uses as shown on the plans or as approved by the engineer. The flowable fill shall be a cementitious mixture of portland cement, fly ash (depending on application and mix design), fine aggregate, water, entrained air, and appropriate admixtures for the particular application.

710.02 MATERIALS. Materials shall comply with the following sections and subsections:

Portland Cement	1001.01
Fine Aggregate	1003.08.1
Admixtures	1011.02
Water	1018.01
Fly Ash	1001.04

Design and proportion flowable fill in accordance with Table 710-1. Trial batching will be required for excavatable and non-excavatable mixes to ensure appropriate job mix consistency and adherence to Table 710-1 properties.

Use excavatable fill unless noted otherwise on the plans.

Table 710-1
Flowable Fill Mix Design [1]

Material	Excavatable	Non-Excavatable
Portland Cement	75 - 100 lb/cu yd	75 - 150 lb/cu yd
Fly Ash	0 - 150 lb/cu yd	150 - 600 lb/cu yd
Water [2]	—	—
Air [3]	10 - 35%	5 - 20%
Concrete Sand	Proportioned to yield 1 cu yd	Proportioned to yield 1 cu yd
Unit Weight (wet) [3]	90 - 110 lb/cu ft	100 - 125 lb/cu ft
28-Day Compressive Strength [3]	Maximum 100 psi	Minimum 125 psi

[1] Mix designs shall yield 1.0 cubic yard absolute volume.

[2] Mix designs shall produce a consistency that will result in a flowable self-leveling product at the time of placement and conform to the requirements of 710.02.

[3] The requirements for percent air, compressive strength and unit weight are for laboratory designs only and are not intended for jobsite acceptance requirements unless otherwise directed by the project engineer. For early opening to traffic and expedited placement circumstances, the maximum or minimum required strength shall be attained in the desired time frame.

710.03 CONSTRUCTION REQUIREMENTS. Before placement, provide temporary end dams or soil berms as directed by the engineer to confine the flowable fill. Place flowable fill to the lines and grades shown on the plans or as directed. Where flotation or misalignment may occur due to hydrostatic pressure, assure correct alignment and placement of the encased structure by using straps, soil anchors, or other approved means of restraint. Protect flowable fill from freezing for 36 hours after placement. Place flowable fill by chute, pumping or other methods approved by the engineer. Due to flowable fill's liquid condition, take into account the hydrostatic pressure on adjacent structures on deep fills where multiple lifts may be required. While in a liquid state, flowable fill in deep excavations is in a quick condition, and shall be protected until hardening occurs. For early opening to traffic and expedited placement circumstances, perform trial batches to verify compressive strength for the required time frame before placing under load. Flowable fill will not require field sampling or testing

other than the approved trial batch mix design, unless otherwise directed by the project engineer.

710.04 MEASUREMENT. Flowable fill will be measured by the cubic yard by batch tickets as adjusted by the project engineer.

710.05 PAYMENT. Payment for flowable fill will be made at the contract unit price per cubic yard.

Payment will be made under:

Item No.	Pay Item	Pay Unit
710-01	Flowable Fill	Cubic Yard

Section 711
Riprap

711.01 DESCRIPTION. Furnish and place riprap in accordance with these specifications and in conformity to lines, grades, and thickness shown on the plans or as directed.

711.02 MATERIALS. Furnish stone or recycled concrete riprap from an approved source. Stone riprap shall be listed in the Approved Materials List. Stone riprap shall not disintegrate upon exposure to the elements or be easily broken from handling, and shall be reasonably free from earth and other foreign materials. When tested in accordance with AASHTO T 85, the solid weight of stone shall be at least 155 pounds per cubic foot (based on bulk specific gravity). The least dimension of any individual stone shall be at least one-third its maximum dimension. Each shipment of stone shall be reasonably well graded within the specified limits.

Recycled concrete may be used as riprap unless otherwise indicated in 711.02.1, provided its solid weight is at least 140 pounds per cubic foot (based on bulk specific gravity) and free of protruding reinforcement.

Stockpiles of recycled concrete shall be source approved prior to use and kept separate from other materials. Stockpiles shall be uniform and free of soil, debris, excessive amounts of asphalt materials, and foreign matter. Once a stockpile has been approved as an acceptable source of material, do not add material without further approval.

Visually inspect riprap at the source, project site, or both to control gradation.

Any difference of opinion between the engineer and contractor will be resolved by checking the gradation of two random truckloads (or equivalent size samples). Furnish equipment, labor, and a sorting site at no direct pay.

711.02.1 Riprap: Riprap shall be reasonably well graded and in compliance with Table 711-1**.**

Table 711-1
Riprap

Riprap Class [1]	Stone Size, lb	Spherical Diameter, foot [2]	Percent of Stone Smaller Than
2 lb	10	0.51	100
	4	0.38	40-100
	2	0.30	15-50
	0.75	0.22	0-15
10 lb	50	0.88	100
	20	0.65	50-100
	10	0.51	15-50
	5	0.41	0-15
30 lb	140	1.24	100
	60	0.94	42-100
	30	0.74	15-50
	10	0.51	0-15
55 lb [3]	275	1.50	100
	110	1.11	42-100
	55	0.88	15-50
	20	0.63	0-15
130 lb [3]	650	2.00	100
	260	1.46	45-100
	130	1.17	15-50
	40	0.79	0-15
250 lb [3]	1250	2.50	100
	500	1.83	45-100
	250	1.46	15-50
	80	1.00	0-15
440 lb [3]	2200	3.00	100
	900	2.23	40-100
	440	1.76	14-50
	130	1.17	0-15
1000 lb [3]	5000	4.00	100
	2000	2.91	45-100
	1000	2.31	10-50
	300	1.55	0-15

[1] The stone size used to define the Riprap Class is the minimum median stone size for the stone class. The minimum thickness of a riprap layer shall be no less than the spherical diameter of the maximum stone size in the Riprap Class.

[2] Spherical diameters of riprap classes up to 30 lb are based on a solid stone weight of 140 lb/cu ft. Spherical diameters of riprap classes above 30 lb are based on a solid stone weight of 155 lb/cu ft.

[3] Recycled portland cement concrete shall not be used in these riprap classes.

711.02.2 Geotextile Fabric: Geotextile Fabric shall comply with 1019.01.

711.03 CONSTRUCTION REQUIREMENTS.

711.03.1 Riprap: Grade slopes or areas on which riprap is to be placed to the required section. Place riprap on the prepared slope or area in a manner which will produce a reasonably well-graded mass of stone with a minimum practicable percentage of voids. Place the entire mass of stone in conformance with the lines, grades, and thickness in one operation without displacing underlying material. Placing of riprap in layers, or dumping into chutes, or by similar methods likely to cause segregation will not be permitted.

When placement in water currents is required, make drift checks and place riprap in such manner as to compensate for drift. Furnish necessary facilities, equipment, and personnel for checking riprap depth and distribution.

711.03.2 Filter Stone: When specified, place filter stone on the prepared slope or area before placement of riprap. When filter stone is placed underwater, free dumping will not be permitted. Use controlled methods for underwater placement using bottom dump buckets or wire rope baskets lowered through the water to the point of placement. If placement in strong water currents is required, place riprap promptly after placement of filter stone. Unless shown otherwise on the plans or directed, filter stone shall be Riprap Class 10 lb or less.

711.03.3 Geotextile Fabric: When specified, place geotextile fabric on the prepared slope or area in accordance with 203.11.3 before placement of riprap. Take care not to damage the geotextile fabric when placing riprap. Do not place riprap by rolling riprap down slope, or dropping riprap from extreme heights, or by similar methods likely to damage geotextile fabric. Repair damaged geotextile fabric in accordance with 203.11.3 or replace as directed.

711.04 MEASUREMENT. Riprap and filter stone may be measured on a square yard, cubic yard, or weight basis as specified.

When measured on a square yard basis, the quantity measured will be that actually placed to the limiting dimensions shown on the plans or as directed by the engineer. When measured on a cubic yard basis, measurement will be made in vehicles at the point of delivery on the project in accordance with 109.01.

When measured on a weight basis, the pay unit will be per ton (2000 pounds). When riprap is delivered by vehicles or railroad cars, measurement will be based on certified weight tickets furnished by the contractor. When riprap is delivered by barge, measurement will be made by calculation from barge displacement, based on water weighing 62.4 pounds per cubic foot.

Geotextile fabric will be measured by the square yard of covered area in place.

No measurement will be made for excavation or backfilling.

711.05 PAYMENT. Payment for riprap and geotextile fabric will be made at the contract unit prices. Filter stone will be paid for as riprap.

Payment will be made under:

Item No.	Pay Item	Pay Unit
711-01	Riprap	Square Yard
711-02	Riprap	Cubic Yard
711-03	Riprap	Ton
711-04	Geotextile Fabric	Square Yard

Section 712
Revetments

712.01 DESCRIPTION. Furnish and construct revetments for protection of embankment slopes, stream channels, culvert end treatments, and other areas. Revetments shall be constructed in accordance with these specifications and in conformity with the details shown on the plans or as directed.

When including an item for Flexible Revetments in the contract, the contractor has the option of furnishing revetments of stone, recycled portland cement concrete, wet-batched sacked concrete, dry-batched prepackaged sacked concrete, or cabled articulated concrete block mattress.

When including an item for Stone Revetment in the contract, the contractor has the option of furnishing revetments of either stone or recycled portland cement concrete.

When including an item for Sacked Concrete Revetment in the contract, the contractor has the option of furnishing revetments of either wet-batched sacked concrete or dry-batched prepackaged sacked concrete.

Use the same type revetment at each location. Except for cast-in-place revetment, place revetments on geotextile fabric.

712.02 MATERIALS.

712.02.1 Concrete: Concrete for cast-in-place revetment shall be Class R complying with Section 901.

712.02.2 Geotextile Fabric: Geotextile fabric shall comply with 1019.01.

712.02.3 Wet-Batched Sacked Concrete: Sacks shall comply with 1018.07. Concrete shall be Class R concrete complying with Section 901. Concrete shall be wet-batched prior to placement in sacks. Add mixing water to concrete as required to produce a slump of 4 inches to 6 inches. Immediately place the sacked concrete in the revetment after batching.

712.02.4 Stone and Recycled Portland Cement Concrete: Stone and recycled portland cement concrete shall comply with Section 711 Riprap Class 30 lb.

712.02.5 Dry-Batched Prepackaged Sacked Concrete: Use a prepackaged an Approved Materials List concrete product consisting of one

part cement and a maximum of 5 parts sand by weight or other approved mix with the same cement content. Dry mix until uniform in color.

712.02.5.1 Cement: Cement shall be in accordance with 901.08.1 and 1001.01.

712.02.5.2 Aggregate: Aggregates shall comply with the gradation requirements of 1003.08.

712.02.5.3 Sacks: Sacks shall comply with 1018.07 and shall be capable of holding the concrete mixture without leakage during handling.

712.02.5.4 Water: Water shall be from an approved source in accordance with 1018.01.

712.02.6 Usable Soil: Usable soil shall be in accordance with 203.06.1.

712.02.7 Cabled Articulated Concrete Block Mattress: Cabled articulated concrete block mattresses shall consist of interlocking cellular concrete blocks connected with cables to bind the individual blocks into mattresses. The dimensions of the finished mattress shall be as shown on the plans or as directed by the engineer. Size and arrange holes for cable penetrations to minimize exposure of cables to potential environmental degradation. Do not pass cables through open areas within the dimensions of individual blocks. Geotextile fabric, as specified in 712.02.2, may be glued to the bottom of the mattress in lieu of placing the geotextile in the trench prior to placement.

712.02.7.1 Cellular Concrete Blocks: The cellular concrete blocks shall be interlocking, and capable of articulation when formed into mattresses. Furnish open or closed cell blocks as shown on the plans. Ensure that concrete used to make the blocks meets the requirements of Section 901 and has a compressive strength of 4000 psi at 28 days. Use concrete aggregates meeting the requirements of 1003.08 and listed on the Approved Materials List.

712.02.7.2 Cable: Use galvanized steel or continuous filament polyester fiber cable to connect the blocks to form a mattress. Ensure that the cable has adequate tensile strength to lift and handle the mattress safely. Permanent deformation of the cable and mattress due to elongation and elasticity of the cable during handling and placement shall be negligible.

712.03 CONSTRUCTION REQUIREMENTS. Construct revetments in dry or dewatered areas, unless otherwise directed. Remove logs, stumps, and other undesirable material from areas on which revetments are to be placed. Provide usable soil to bring areas to grade and compact to the density

of surrounding ground to the engineer's satisfaction before final grading. Grade the revetment areas to required sections.

712.03.1 Geotextile Fabric Placement: Bury ends of geotextile fabric for anchorage as shown on the plans. Lap adjacent strips of geotextile fabric at least 18 inches. Pin the laps at maximum 5-foot intervals. Do not damage geotextile fabric during revetment placement. Repair damaged fabric in accordance with 203.11.3 or replace at no direct pay.

712.03.2 Concrete Cast-in-Place Revetment: Before concrete placement, place preformed 1/4 inch thick expansion joint filler complying with 1005.01.1 around piles, columns, or other structural elements as directed.

Commence placing concrete revetment for slope protection at the toe of revetment and progress upslope. Place revetment for stream channels and other relatively level areas as directed.

After placement, cure the revetment surface in accordance with 601.03.10.

712.03.3 Wet-Batched Sacked Concrete Placement: Uniformly fill sacks to approximately 3/4 cubic foot. Fold the open end under the bag during placement. Place sacks of wet-batched concrete in one layer in contact with adjacent sacks and tamp into position by approved methods. Begin placement of sacked concrete at the revetment toe and progress upslope. Place sacked concrete revetment for stream channels and other relatively level areas as directed.

712.03.4 Dry-Batched Prepackaged Concrete Placement: Uniformly fill sacks to approximately 3/4 cubic foot and seal the ends by tying, stitching, or other approved methods. Tightly pack the filled sacks against each other. Begin placement at the revetment toe and progress upslope with staggered joints. At the end of each day's operations and upon completion at a location, saturate the sacks and contents with water. The quantity of water required shall be as directed at no direct pay. The compressive strength shall comply with Section 901 for Class R concrete.

712.03.5 Stone Placement: Construct toe and end walls by placing stone in the trench lined with geotextile fabric. Begin placement of stone at the bottom of the slope in a layer having the specified average thickness. Place stone by approved methods. A tolerance of 2 inches above or below the specified thickness will be allowed. Openings between stones exposing more than 4 square inches of geotextile fabric will not be permitted.

712.03.6 Cabled Articulated Concrete Block Mattress Placement: Sufficiently excavate the area in which the mattress is to be

placed to ensure that the mattress is resting on the bottom of the trench. Excavate the trench to an elevation 6 inches below the grade line shown on the plans. The mattress placement direction shall be as shown on the plans or as directed by the engineer. Where requiring more than one width or length of mattress, bind adjacent mattresses together according to plan details to the satisfaction of the engineer.

712.04 MEASUREMENT. Revetments will be measured by the square yard of surface area to be re-vetted as shown on the plans and as directed. Site preparation, geotextile fabric, and expansion joint filler will not be measured for payment. Excavation, cables, and ties for cabled articulated concrete block mattress will not be measured for payment.

712.05 PAYMENT. Payment for all revetments will be made at the contract unit price per square yard, which includes furnishing and installing all materials as shown on the plan details and in accordance with this section. Payment for concrete cast-in-place revetment, wet, and dry batched sacked concrete revetment, will be made on a lot basis at the contract unit price per square yard, adjusted in accordance with table 901-5. Size, sampling, and testing of each concrete lot shall be in accordance with the materials sampling manual. Payment for cabled articulated concrete block mattress will be made per square yard**.**

Payment will be made under:

Item No.	Pay Item	Pay Unit
712-01	Concrete Cast-in-Place Revetment	Square Yard
712-02	Sacked Concrete Revetment	Square Yard
712-03	Stone Revetment	Square Yard
712-04	Flexible Revetment	Square Yard
712-05	Cabled Articulated Concrete Block Mattress	Square Yard

Section 713
Temporary Traffic Control

713.01 DESCRIPTION. Furnish, install, maintain, and remove temporary construction barricades, precast concrete barriers, lights, signals, pavement markings, and signs; provide flaggers; and comply with all other requirements regarding the protection of the work, workers, and safety of the public. Unless otherwise noted in the plans or special provisions, this work also provides for traffic control management in compliance with the *Manual On Uniform Traffic Control Devices* (MUTCD), including the installation, inspection, maintenance, and removal of all traffic control devices relative to work on the project. Signs, barricades, barriers, channelizing devices, pavement markings, or any other temporary traffic control measures shall comply with plan details, *Temporary Traffic Control Standards*, the MUTCD, and these specifications.

Signs, barricades, barriers, channelizing devices, pavement markings, and arrangements thereof, as shown on the plans, are minimum requirements. Furnish and install appropriate signs for special conditions as directed. Requirements for proper signs, barricades, barriers, channelizing devices, or other safety precautions promulgated by the contractor's insurers are not negated by these specifications. These specifications shall not be construed to relieve the contractor of responsibilities for the safety of the public, for liability in connection therewith, or compliance with state and local laws or ordinances.

Assign one or more authorized Traffic Control Supervisors (TCS) to provide traffic control management for the project. If assigning more than one TCS, then submit a weekly schedule identifying who will be in charge of providing traffic control management on a daily basis to the engineer. The TCS shall have a set of all contract documents relating to traffic control (and traffic staging if applicable), a current copy of the MUTCD, and a current copy of Temporary Traffic Control Standards readily available at all times.

If a subcontractor provides traffic control management, the subcontractor's TCS shall meet all the requirements set forth herein.

The contractor may assign one or more Traffic Control Technicians (TCT) to assist the TCS in inspection and maintenance of Traffic Control Devices.

713.02 MATERIALS. Materials for temporary signs, barricades, barriers, and related devices shall comply with the following sections and subsections:

Portland Cement Concrete	901
Reinforcing Steel	1009.01
Backing Material	1015.04.2
Reflective Sheeting	1015.05
Temporary Pavement Markings	1015.08
Raised Pavement Markers & Adhesive	1015.09
Thermoplastic Pavement Markings	1015.10
Traffic Paint	1015.12
Barricade Warning Lights	1018.13

713.02.1 Temporary Pavement Markings: Temporary pavement markings shall be a minimum of 4 inches wide.

713.02.2 Reflective Sheeting: Reflective sheeting requirements for temporary signs, barricades, channelizing devices, drums, and cones shall comply with the following:

713.02.2.1 Temporary Signs and Barricades: On the mainline of freeways and expressways, fabricate the initial advanced warning construction sign using DOTD Type X (Fluorescent Orange) reflective sheeting. Reflective sheeting for all other temporary signs and barricades shall comply with the requirements of ASTM D 4956, Type III.

713.02.2.2 Vertical Panels: Reflective sheeting for vertical panels used to channelize or divide traffic shall meet the requirements of ASTM D 4956, Type III.

713.02.2.3 Drums and Supercones: Reflective sheeting for drums and supercones shall meet the requirements of ASTM D 4956, Type III, and the Supplementary Requirement S2 for Reboundable Sheeting as specified in 1015.05.6.

713.02.2.4 Traffic Cones: Reflective sheeting for traffic cones shall meet the requirements of ASTM D4956, Type III or VI.

713.03 FABRICATION. Fabricate temporary signs, barricades, and related devices according to 729.04. Label back of signs with name of fabricator, date fabricated and the department project number. Fabricate precast concrete barriers according to Section 805.

713.04 TEMPORARY SIGNS AND BARRICADES.

713.04.1 General: When work is in progress, furnish and install temporary signs, barricades, and related devices on portions of the work covered by the Notice to Proceed or when operations are suspended. During such times that temporary signs, barricades, and related devices are not in place, maintain required traffic control devices. Do not begin construction work until signs, barricades, and other traffic control devices have been erected and approved.

The contractor's Traffic Control Supervisor (TCS) shall coordinate with the engineer before removing or covering any signs that conflict with temporary traffic control signs.

When placing signs, coordinate with the engineer in removing Departmental signs, so that appropriate signs are in place at all times.

Signing shall remain in place and be maintained by the contractor, supplemented by additional signs as required, throughout the period of work. When erecting previously used signs on a project, the engineer must inspect and approve these signs before erection. Remove all signs with reduced retroreflectivity or excessive color fading from the work zone. In case of a dispute over a rejected used sign, the engineer may take such measurements or review retroreflectivity and color data obtained by the contractor to determine if the sign meets minimum standards for new materials. Replace signs that do not meet the minimum standards for new materials at no direct pay.

Rejected signs will be marked on the back "NOT FOR USE ON STATE PROJECTS."

Remove signs placed by the contractor according to the Traffic Control Plan. The Department will ensure that all permanent highway signs are in place upon completion and prior to final acceptance of the project.

On projects where constructing the surface course with asphalt concrete or portland cement concrete, install permanent striping and raised pavement markers (when required) prior to removal of barricades.

Upon removal, signs, barricades, and related devices furnished and placed by the contractor shall remain the contractor's property.

713.04.2 Advance Warning Area: When specified, provide Type C arrow boards for temporary traffic control at locations shown on the plans or as directed.

713.04.3 Sign Supports: Mount signs a minimum of 5 feet above the higher of the roadway or the ground clearance. In urban areas, mount the signs a minimum of 7 feet above the roadway.

713.05 PORTABLE CHANGEABLE MESSAGE SIGNS. Furnish, operate, and maintain solar powered portable changeable message signs at all locations designated on the plans or as directed.

The portable changeable message sign shall be in good operational condition when delivered to the job site. The engineer will inspect the signs; if they are found to be in good operational condition with all working parts functioning, the signs will be approved for use on the project.

The message sign shall consist of three separate lines. Each line shall consist of eight characters. Each character shall nominally be 18 inches in height. The width shall be adequate to meet the below legibility requirements. Each character shall be a 5 x 7 LED module or hybrid LED disk. Characters shall be separated at a distance such that the legibility requirements are maintained.

All internally illuminated portions of the sign shall be amber in color. Externally illuminated surfaces meant for message display shall be fluorescent yellow. Non-illuminated surfaces on the front panel shall be flat black in color.

The sign shall be clearly visible under all conditions and all lanes of travel from a distance of 1000 feet perpendicular to the sign center. The sign shall maintain this legibility throughout the entire project. The contractor shall be responsible for maintaining this minimum legibility. Determination of legibility distance shall rest solely with the engineer.

Use the portable changeable message sign in conjunction with other traffic signs and devices in accordance with the plans, project specifications, and as directed by the engineer. Messages shall be approved by the engineer.

Store the signs in an approved secure storage area when not in use. Perform all maintenance operations recommended by the manufacturer and keep adequate records of such operations.

Keep the signs clean and in good repair at all times.

713.06 TEMPORARY PRECAST CONCRETE BARRIERS. Barrier units shall be furnished by the contractor unless specified otherwise. Each barrier unit shall be 15 feet in length.

When the barrier units are furnished by the Department, the units will be furnished at no cost to the contractor. The contractor shall load the barrier units at the location specified, deliver the units to the construction site, and place them as required.

The contractor shall relocate barrier units as required during construction.

Furnish connecting pins and plastic reflectors at no additional cost to the Department. Reflectors shall have 7.0 square inches minimum reflective

area. Install a maximum of 15 feet apart (each side) and in accordance with the manufacturer's recommendations. Replace damaged pins or reflectors as directed by the engineer.

After completion of the work, barrier units furnished by the Department shall be removed, transported by the contractor to the location specified, and unloaded as directed. All costs of loading, transporting, and unloading the barrier units shall be included in the contract price for this item. Barrier units furnished by the contractor shall, upon removal, remain the contractor's property. Satisfactorily repair or replace damaged barrier units at no direct pay.

713.07 PAVEMENT MARKINGS. Color, width, and type of temporary pavement markings shall be in accordance with Table 713-1 and the MUTCD. Temporary pavement markings shall be in place by the end of each day's operation.

Apply temporary striping tape by approved methods to the satisfaction of the engineer. Apply thermoplastic pavement markings in accordance with 732.03. Apply painted traffic striping in accordance with Section 737.

Table 713-1
Temporary Pavement Marking [1, 2, 3]

		Two-lane Highways	Undivided Multilane Highways	Divided Multilane Highways
SHORT TERM	All ADT's with time <7 days	Lane lines 4-ft tape on 40-ft centers; with no passing zone markings. "Do Not Pass" and "Pass With Care" signs as required	Lane lines 4-ft tape on 40-ft centers; dbl yellow centerline	Lane lines 4-ft tape on 40-ft centers
	All ADT's with time >7 days and ≤ 30 days	Lane lines 4-ft tape on 40-ft centers with no passing zone markings and no edgelines. "Do Not Pass" and "Pass With Care" signs as required	Lane lines 4-ft tape on 40-ft centers; dbl yellow centerline and edgelines	Lane lines 4-ft tape on 40-ft centers and edgelines
LONG TERM	All ADT's with time >30 days	Standard 10-ft lane lines, no-passing zone markings; when pavement width is ≥22 ft , edge lines	Standard 10-ft lane lines, centerlines, edge lines	Standard 10-ft lane lines, centerlines, edge lines

[1] No-passing zones shall be delineated as indicated whenever a project is open to traffic.
[2] On all Asphalt Surface Treatments that are open to traffic and used as a final wearing course or as an interlayer, temporary pavement markings (tabs) on 20-foot centers shall be used in lieu of the 4-foot tape on 40-foot centers.
[3] A $150 per day penalty will be assessed the contractor if Table 713-1 is not adhered to.

713.07.1 Short-term Pavement Markings: Provide short-term pavement markings on all pavement surfaces under traffic.

Install temporary striping tape a minimum of 4 feet long on a maximum of 40-foot centers on centerlines of two-lane highways and lane lines of multilane highways. When short-term pavement markings require no-

passing zone markings or double yellow centerlines on undivided multilane highways, use any of the temporary pavement markings listed in 713.02.

Removal of short-term pavement markings only required on the final surface.

713.07.2 Long-term Pavement Markings: Provide long-term pavement markings on all surfaces not covered by an additional surface within two weeks. Long-term pavement markings shall include, but are not limited to, standard lane and centerline markings, edge lines, no passing zone markings on two-lane highways, stop bars, and legend and symbol markings as shown on the permanent pavement marking details. Layout work for exact location of markings will only be required on the final wearing surface**.**

These markings include all of the pavement markings listed in 713.02.

Long-term markings do not include the installation of raised pavement markers.

713.07.3 Final Surface: On the final surface of portland cement concrete pavement or asphalt concrete pavement, place temporary markings with sufficient accuracy to avoid conflict with permanent striping. Temporary pavement markings on the final surface shall be any of the pavement markings listed in 713.02.

Place permanent markings over traffic paint on final surfaces provided the temporary markings have been placed in the final configuration and the painted lines are not flaking or showing signs of deterioration.

When required, remove temporary pavement markings in accordance with the requirements for the type of permanent marking being used. No objectionable staining of pavement surface as a result of the removal procedure will be allowed.

713.07.4 Temporary Reflectorized Raised Pavement Markers: When required, install temporary reflectorized raised pavement markers in accordance with Section 731.

713.07.5 Pavement Markings for Asphalt Surface Treatment: The type of markings shall be in accordance with Table 713-1. Put short-term temporary pavement markings in place at the end of each day's operation. Put long-term temporary pavement markings in place as soon as practical after expiration of the four-day maintenance period following the asphalt surface treatment operation. On the final wearing course, place permanent markings within two weeks following completion of the long-term temporary pavement markings.

When used on the final wearing course, painted traffic striping shall be in accordance with Section 737.

Install temporary raised markers on centerlines of two-lane highways and lane lines of multilane highways in accordance with 1015.08.3. "No passing zone" markings shall be any of the temporary pavement markings listed in 713.02.

Install the temporary raised pavement markers in accordance with the manufacturers' recommendations or as directed by the engineer. Place temporary raised markers consisting of flexible reflective tabs at 20-foot intervals on the centerline of the roadway. Install the markers so that the reflective faces of the markers are perpendicular to a line parallel to the roadway centerline.

If directed by the engineer, remove the temporary raised pavement markers after permanent striping has been accomplished. Repair damage to the pavement surface at no direct pay.

713.08 PORTABLE WORK ZONE TRAFFIC CONTROL DEVICES.

All Category I, II, and III portable work zone traffic control devices, as described below, shall be crashworthy as determined by evaluations through the National Cooperative Highway Research Program (NCHRP) 350 for Test Level 3 (TL-3) or the American Association of State Transportation Officials (AASHTO) M*anual for Assessing Safety Hardware (MASH)*.

713.08.1 Category I Devices: Category I devices are low-mass, single-piece traffic cones, tubular markers, single-piece drums, and flexible delineators. By definition, they are considered crashworthy devices meeting NCHRP Report 350 or MASH criteria. Drum and light combinations with Type A or C warning lights and vandal resistant fastener hardware are included as Category I devices. In lieu of testing for crashworthiness, acceptance of Category I devices for compliance with NCHRP 350 or MASH will be allowed based on self-certification by the supplier. The supplier shall certify that the product is crashworthy in accordance with the evaluation criteria of NCHRP 350 or MASH. This certification may be a one-page affidavit signed by the supplier, with supporting documentation kept on file to be furnished if requested.

713.08.2 Category II Devices: Category II devices include other low mass traffic control devices such as portable barricades either with or without lights or signs, portable sign stands, temporary sign posts, portable vertical panel assemblies, and drums with lights not meeting the drum and light combination requirements for Category I. Individual crash testing is required for Category II devices. FHWA letters of approval shall serve as verification that these devices comply with the crash testing requirements of NCHRP Report 350 or MASH. Provide for the engineer a listing of all the

Category II devices to be used on the project prior to installation including a reference to the FHWA Work Zone letter number for each device. Also certify that each device has been crash tested and meets the NCHRP 350 or MASH requirements.

713.08.3 Category III Devices: Category III devices include massive devices such as temporary concrete barriers, water filled barriers, and temporary attenuators. Individual crash testing is required for Category III devices. FHWA letters of approval shall serve as verification that these devices comply with the crash testing requirements of NCHRP Report 350 or MASH. Provide for the engineer a listing of all the Category III devices to be used on the project prior to installation including a reference to the FHWA Work Zone letter number for each device. Also certify that each device has been crash tested and meets the NCHRP 350 or MASH requirements.

713.09 TRAFFIC CONTROL MANAGEMENT.

713.09.1 Authorization: Prior to commencing work requiring traffic control management, submit to the engineer proof of the Traffic Control Supervisor's (TCS) and Traffic Control Technician's (TCT) current authorizations.

713.09.1.1 Traffic Control Supervisor (TCS) Authorization: The Department will accept the TCS authorization of other approved agencies or firms only if all of the following minimum TCS requirements are met:

1. Successful completion of a work zone traffic control supervisor course approved by the Department.
2. Passing a written examination on the work zone traffic control supervisor course.
3. A minimum of one year full-time field experience, verified by the agency or firm, in work zone traffic control. This experience may be verified by the Department at its discretion.
4. A TCS refresher course is required every 4 years.

713.09.1.2 Traffic Control Technician (TCT) Authorization

The Department will accept the TCT authorization of other approved agencies or firms only if all of the following minimum requirements are met:

1. Successful completion of a work zone traffic control technician course approved by the Department.
2. Passing a written examination on the work zone traffic control technician course.

3. A TCT refresher course is required every 4 years.

713.09.2 Traffic Control Supervisor (TCS) Duties: The TCS shall be responsible for traffic control management. The TCS shall be available to the engineer to address traffic control management issues as needed. The following is a listing of the TCS's primary duties:

1. Personally provide traffic control management and supervision services at the project site. The TCS may have other assigned duties, but shall be readily available at all times to perform TCS duties as required in the contract. A minimum of one TCT or TCS shall be required on site during working hours, except the following where a TCS shall be onsite at all times during working hours:

- freeways, expressways, and interstates
- multilane roads with posted speeds of 45 mph and greater
- other roadways with ADT equal to and greater than 25,000.

2. Be responsible for observing and evaluating both the daytime and nighttime performance of all traffic control devices installed on the project, in accordance with the Traffic Control Plan (TCP). Ensure that the devices are performing effectively as planned for both safety and traffic operations purposes. Do this inspection upon the initial installation of the devices and when any changes are made. This is in addition to the inspection of traffic control required in 713.09.5.

3. Be responsible for revisions requested by the contractor to the traffic control plan established in the contract and submit the new traffic control plan in accordance with 713.09.3.

4. Be responsible for the training of flagging personnel. This training will ensure that all flagging done on the project is in compliance with the MUTCD Part VI and Louisiana Work Zone Traffic Control Details. Flaggers shall be re-qualified every 4 years.

5. Coordinate all traffic control operations for the duration of the contract, including those of subcontractors, utility companies, and suppliers, to ensure that all traffic control is in place and fully operational prior to the commencement of any work. The Department recognizes that the contractor does not have direct control over the traffic control operations of the utility companies. The coordination provided by the TCS when dealing with utility companies is specifically for the purpose of coordinating concurrent utility traffic control with any other construction traffic control to avoid conflicts.

6. Coordinate, in writing, all project activities with the appropriate law enforcement, fire control agencies, and other appropriate public agencies as determined at the pre-construction conference by the engineer. Also invite the above agencies to the pre-construction conference.

7. The Department, in collaboration with the TCS, will prepare and submit statements concerning road closures, delays, and other project activities to the news media on a weekly basis or more often as needed. Submit news releases to the engineer for review and approval prior to the Department's submittal to the news media.

8. Notify the engineer, or designee, immediately of all vehicular accidents and/or incidents related to the project traffic control. Document the time and date of notification in the traffic control diary. Also monitor and document queues that occur as necessary.

9. Attend the pre-construction conference and all project meetings.

10. Assume responsibility for the maintenance, cleanliness, replacement, and removal of traffic control devices of the existing traffic control plan during working and non-working hours.

713.09.3 Traffic Control Plan Revisions: Make requests for revision in the traffic control plan in writing to the engineer a minimum of 14 calendar days in advance of the needed revision. If the requested revision falls within the scope of the existing contract drawings, the engineer may approve the revision. If the engineer determines that the requested revision is outside the scope of the contract drawings, the contractor will be required to submit a change order request. The change order drawings shall conform to the following:

1. Letter size original contract drawings. Submit change order drawings on high quality, white 8 1/2 x 11 inch letter size paper. The drawings may be hand drafted or computer drafted and arranged in landscape format on the page. The text and drawings must be legible after reproduction on standard reproduction equipment. Left, bottom, and right hand margins shall be at least 1/2 inch and the top margin shall be 1 inch.

2. Full size original contract drawings. Submit change order drawings on high quality, 4-mil, double-matte film using a plotting or reproduction process that fuses the graphics to ensure durability. Repeated handling and friction due to stacking of plans shall not smear, flake or rub off the graphics. Improper plotter settings and plotter wear may cause inconsistent durability of the drawings. Test samples of the submitted drawings for durability. Advance samples of matte films may be submitted for approval; however, the contract plans will be tested separately. Failures will result in rejection of the submittal. Drawing sizes shall comply with 801.05.2.2.1.

3. Lettering on change order drawings shall be of adequate size to facilitate a 50 percent reduction of plans. Make additions or changes with a permanent type of waterproof ink made for this purpose. If revised cross-sections are required, plot the cross-sections on standard cross-section

sheets. As a minimum, draw the ground line, centerline elevation, and station numbers in ink; the remaining information may be drawn in pencil.

Regardless of size, identify all required change order drawings and documents with the DOTD project title and project number. Sign and seal all plans and calculations by a Louisiana licensed civil engineer.

All plans submitted by the contractor shall conform to these specifications and standards. The DOTD Chief Engineer may reject any plans not conforming to these standards.

Revisions to the TCP that are determined to be outside the scope of the original contract drawings must be approved by the DOTD District Traffic Engineering Division prior to implementation of the requested revision. In some cases on high traffic routes or high priority projects, the revisions must be approved by the HQ Traffic Operations Engineer.

713.09.4 Traffic Control Diary: The TCS shall maintain a project traffic control diary using the Department's Site Manager Program. As a requirement of 713.09.2.8, keep the traffic control diary current on a daily basis and electronically sign each daily entry. A date stamp is required on each diary, so it is imperative to complete these diaries in a timely manner. Completion and maintaining of the daily diaries in accordance with the plans and specifications is subject to the LA R.S. 14:133 "Filing or Maintaining False Public Records." Photographs and videotapes may be used to supplement the written text.

Make the traffic control diary available at all times for inspection by the engineer. Review the diary with the engineer on a weekly basis and submit a copy to the engineer on a monthly basis. Failure to complete the diary on a daily basis or make the diary available for review shall result in a deduction from payments for the work of $150 per calendar day as stipulated damages for each day the diary is not completed or maintained. On days when the Department's Site Manager Program is unavailable, either due to location or operation, the TCS shall make arrangements with the approval of the Project Engineer to submit the traffic control diaries daily. Failure to submit the monthly copy of the diary to the engineer shall result in the withholding of the next partial payment until the past due diaries are submitted. Submitted diaries that indicate that contemporary daily record keeping has not been maintained, as determined by the engineer, the Department's Work Zone Engineer, or the Department's Statewide Traffic Control Specialist shall result in a deduction of $150 for each such deficiency as stipulated damages from payments for the work. The lack of a weekly review by the engineer shall not relieve the contractor from the assessment of stipulated damages for its failure to maintain a daily traffic control diary. The traffic control

diary is part of pay item 713 and shall become the property of the Department at the completion of the project.

The contractor, with the approval of the engineer, the Department's Work Zone Engineer, or the Department's Statewide Traffic Control Specialist, may cease the requirement for a traffic control diary when:

1. The project has been partially accepted and/or no remaining work exists on the project site that impacts the travelling public or,

2. When all signs and barricades are removed at the conclusion of the project.

When referring to the daily completion of the dairy, it is meant that the TCS shall complete the diary by the end of the following day except as follows:

1. If the contractor does not work on Saturday, the Friday and Saturday diaries shall be entered into SiteManager no later than Monday morning at 9:00 am.

2. If the contractor works on Saturday, the Friday diary shall be entered by the end of the day Saturday, but the Saturday diary shall be entered no later than Monday at 9:00 am. The Sunday diary shall still be entered by the end of the day Monday.

713.09.5 Inspection of Traffic Control: The TCS shall be responsible for the inspection of all traffic control devices every calendar day that traffic control devices are in use. This inspection may be delegated to the TCT, except for the conditions described in 713.09.2.1 above, where the TCS shall conduct the inspections himself. Regardless, the TCS shall be stationed within one hour of the jobsite. Use the *Quality Guidelines for Work Zone Traffic Control Devices* standard by the American Traffic Safety Services Association (ATSSA) to evaluate the condition of the traffic control devices to determine if they are acceptable for use. Provide for the immediate repair, cleaning, or replacement of any traffic control devices not functioning as required to ensure the safety of the motorist and construction personnel and/or not meeting the ATSSA standard.

Conduct inspection of the traffic control devices by the TCS at the beginning and end of each workday, and as scheduled or directed by the engineer during the workday. Inspect the traffic control devices by the TCS on weekends, holidays, or other non-work days at least once per day. Inspect traffic control devices by the TCS at least once a week during nighttime periods and the same night after any modifications or changes have been made in the traffic control devices.

713.09.6 Failure to Comply: The engineer, the Department's Work Zone Engineer, or the Department's Statewide Traffic Control Specialist may suspend all or part of the contractor's operation(s) for failure to comply with the approved "Traffic Control Plan" or failure to correct unsafe traffic conditions within a reasonable period of time after such notification is given to the contractor in writing. If major traffic control deficiencies require immediate corrective action for the safety of the travelling public, the engineer, the Department's Work Zone Engineer, or the Department's Statewide Traffic Control Specialist may completely suspend the contractor's operations. This suspension can either be spoken or written, but if spoken, shall be followed up in writing as soon as practical. The Department reserves the right to revoke or de-certify the TCS for gross neglect of these duties. At this point, the TCS shall retake a Department approved TCS course and shall be subject to a 90-day probationary period at the discretion of the Department.

In the event that the contractor does not take appropriate action to bring the deficient traffic control into compliance with the approved traffic control plan or to correct the unsafe traffic conditions, the Department may proceed with the corrective action using its own forces, and such costs will be deducted from payments owed to the contractor.

If the contractor's operations are suspended, the normal assessment of contract time will not cease for the period required to correct these unsafe conditions and traffic control deficiencies. The contractor will not be relieved of the responsibility to provide traffic control safety to the traveling public when a project is under full or partial project suspension. When a project is under suspension due to the contractor's failure to comply with this section, or when the contract is under stipulated damages, continue to provide traffic control management. No additional measurement or payment will be made. If suspensions or partial suspensions are requested by the contractor, the additional traffic control management costs will be at no expense to the Department.

713.09.7 Engineer Modifications: The provisions included in the plans and specifications for handling and controlling traffic during construction may be changed by the engineer, with the approval of the DOTD District Traffic Operations Engineer, due to actual field conditions encountered. Such changes will be made by written instruction to the contractor and be considered an amendment of the plans and specifications as of the date of the change.

713.10 NIGHTTIME CONSTRUCTION OPERATIONS.

713.10.1 Description: This work consists of furnishing, installing, operating, maintaining, moving, and removing portable light towers and equipment-mounted fixtures for nighttime construction operations. Nighttime construction operations are defined as work performed after sunset and before sunrise.

713.10.2 Equipment Requirements: Materials and equipment shall be in good operating condition and in compliance with applicable OSHA, NEC, and NEMA codes.

The contractor shall furnish, to the engineer, two light meters capable of measuring the level of illuminance. These light meters will be used by the engineer to check the adequacy of illumination throughout the nighttime construction operations. The light meters will become the property of the contractor after final acceptance.

Suitable brackets and hardware shall be provided to mount lighting fixtures on equipment and machinery. Mountings shall be designed so that light fixtures can be positioned as necessary to reduce glare and provide the required illumination. Mounting brackets and fixtures shall not interfere with the equipment operator or any overhead structures and shall be securely connected to the fixtures to ensure minimum vibration.

Equipment-mounted systems shall be attached to construction equipment to provide Level II and Level III illuminance. Equipment mounted lighting shall be designed and positioned to be operated independently of general illumination.

Portable systems may consist of ground-mounted, trailer-mounted, or equipment mounted light towers. Portable light towers shall be sturdy and free-standing without the aid of guy wires or bracing. Towers shall be capable of being moved as necessary to keep pace with the construction operation. Extreme caution shall be used when moving portable light towers in the vicinity of overhead utilities. Portable lighting systems shall be positioned to minimize the risk of being impacted by traffic on the roadway or by construction equipment.

Conventional vehicle headlights shall not be permitted as the sole means of illumination while working. All motorized vehicles shall be equipped with conventional vehicle headlights to permit safe movement in non-illuminated areas. Use of strobe lights on vehicles and equipment is prohibited. Use of flashing lights shall be kept to a minimum to prevent motorist distraction. Flashing lights shall not be used behind barrier protection systems.

Switches shall be provided to adequately control the various lights. All

wiring shall be weatherproof and installed according to local, state, federal, and OSHA requirements. Ground fault circuit interrupters shall be provided for electrical outlets used for electrical tools and extension cords. The contractor shall provide sufficient fuel, spare lamps, generators, and qualified personnel to ensure that all required lights operate continuously during nighttime construction operations. In the event of any failure of the lighting system, the construction operation shall be discontinued until the required level of illumination is restored. In residential areas, generator systems shall be selected to comply with local noise ordinances. A supply of emergency flares shall be maintained by the contractor for use in the event of emergency or unanticipated situations.

713.10.3 Illumination Requirements: All operations that are performed during nighttime hours shall be properly illuminated to allow for the safe performance and inspection of the work.

Work area is defined as a minimum of 50 feet ahead and behind the employee, where work is to be performed. A minimum of 5 foot-candles (54 lux) shall be maintained throughout the work area during nighttime construction operations, and during the setup and removal of lane or roadway closures.

Lighting shall be adequate to meet the required level of illuminance and uniformity over the work area as follows:

713.10.3.1 Level I (5 foot-candles, 54 lux): This level of illuminance shall be provided for all work areas of general construction operations, such as excavation and embankment; cleaning and sweeping; landscaping; planting and seeding. Stockpiles shall also be illuminated to Level I to enhance safety and improve work efficiency.

713.10.3.2 Level II (10 foot-candles, 108 lux): This level of illuminance is required for areas on or around construction equipment such as that used for drainage installations, striping, base course construction, milling, asphalt paving operations, and concrete placement and removal. This level is necessary for safe operation of equipment and for obtaining an acceptable level of accuracy.

713.10.3.3 Level III (20 foot-candles, 215 lux): This level of illuminance is required for tasks requiring a higher level of visual performance or for tasks with a higher level of difficulty. Such tasks include, pavement or structural crack filling, joint repair, joint cleaning, joint sealing, pavement patching and repairs, saw-cutting, installation of signal equipment or other electrical/mechanical equipment, and other tasks involving fine details or intricate parts and equipment.

713.10.4 Glare Control: All lighting provided under this item shall be designed, installed, and operated to avoid glare interference with roadway traffic or discomfort for residences adjoining the roadway. The contractor shall locate, aim, and adjust the lights to provide the required level of illuminance and uniformity in the work area without the creation of objectionable glare. The engineer shall determine when glare exceeds acceptable levels, either for traffic or adjoining residences. The contractor shall provide shields, visors, or louvers on luminaries as necessary to reduce objectionable levels of glare.

At a minimum, the following requirements shall be met to avoid objectionable glare to oncoming traffic:

1. Tower-mounted luminaries shall generally be aimed either parallel or perpendicular to the roadway.
2. All luminaries shall be aimed such that the center of the beam axis is no greater than 60 degrees from the vertical.
3. Luminous intensity of any luminary shall not exceed 20,000 candelas at an angle of 72 degrees from the vertical.

713.10.5 Operational Requirements: Thirty days prior to the start of night time operations, the contractor shall submit a lighting plan to the engineer for acceptance. The contractor shall select appropriate lighting systems and design a lighting plan to achieve the required illuminance levels.

The lighting plan shall include location of lights necessary for every aspect of work; description of light equipment to be used; description of power source; attachment and mounting details for lights to be attached to equipment; technical details pertaining to the lighting fixtures; details on hoods, louvers, shields, or other glare control methods; and lighting calculations confirming that the illumination requirements will be met by the layout plan.

Lighting inspection will include (1) light meter measurements to determine illumination levels, (2) subjective observation of the lighting setup to evaluate glare potential for drivers and workers, and (3) a physical check of the lighting equipment to ensure that it complies with the specification requirements included in the contractor's lighting plan.

Prior to the first night of operation, the engineer will check the adequacy of the installed lighting using a light meter. A summary of these measurements will be noted in the inspection records to provide a basis for comparing subsequent measurements. If the required illuminance levels are not met, the contractor shall make the necessary adjustments before any work proceeds.

Operational checks shall be made when construction phasing changes and

lighting plan changes are required to accommodate different phases of construction. Periodic checks will be made throughout the duration of nighttime operations. If the required illuminance levels are not met, the contractor shall make the necessary adjustments to the lighting plan before work continues.

During construction operations, in the event of any failure of the lighting system, the operations shall be discontinued until the required level of illumination is restored.

713.11 MEASUREMENT.

713.11. 1 Temporary Signs and Barricades: When the contract does not include a pay item for "Temporary Signs and Barricades," the provision of temporary construction signs, barricades, and related devices will be considered by the Department to be for the convenience of the contractor and will not be measured for payment.

When including a pay item for "Temporary Signs and Barricades" in the contract, the furnishing, erecting, maintaining, and subsequent removing of temporary construction signs, barricades, and related devices will be measured on a lump sum basis.

Flashing arrow boards will not be measured for separate payment, but will be included in the contract lump sum price for Temporary Signs and Barricades.

713.11.2 Temporary Pavement Markings: When the contract does not include a pay item for Temporary Pavement Markings, provision of these markings will be considered by the Department to be for the convenience of the contractor and will not be measured for payment. When the contract includes an item for Temporary Pavement Markings, these markings' acceptable furnishing, placing, maintenance, and subsequent removal will be measured by the linear foot or mile, as specified.

When measuring by the linear foot of striping, measurement will be made for the material placed. Gaps will be excluded.

When measuring by the mile of single strip per roadway per application, no deduction will be made for the standard design gaps in broken line striping; however, deductions will be made for the length of other gaps or omitted sections.

Temporary pavement legends and symbols will be measured per each legend or symbol.

Temporary reflectorized raised pavement markers will be measured per each marker furnished, placed, and accepted. Removal of temporary reflectorized raised pavement markers will not be measured for payment.

713.11.3 Temporary Precast Concrete Barriers: When the contract does not include a pay item for Temporary Precast Concrete Barriers, the provision of these barriers will be considered by the Department to be for the convenience of the contractor and will not be measured for payment.

Temporary Precast Concrete Barriers furnished by the contractor will be measured per each unit installed, which includes construction, delivery, furnishing, installing, maintaining, and removing each unit from the jobsite a single time. Temporary Precast Concrete Barriers (Department furnished) will be measured per each unit installed which includes collecting from the location specified, transporting, and delivering to the project site, and all costs of handling, maintaining, and returning each unit to the location specified or as directed.

Further movements of barriers for subsequent construction phases will be measured per movement of each barrier.

713.11.4 Traffic Control Management: Traffic control management will not be measured for payment.

713.11.5 Nighttime Construction Operations: Nighttime construction operations will not be measured for payment.

713.12 PAYMENT. Payment for temporary construction signs, barricades, and related devices will be at the contract lump sum price in accordance with the payment schedule of Table 713-2.

Table 713-2
Payment Schedule
Temporary Signs, Barricades and Related Devices

Percent of Total Contract Amount Earned	Allowable Percent of Lump Sum Price for Temporary Signs and Barricades
Initial Erection	40
25	60
50	80
75	95
100	100

Payment for temporary pavement markings will be made at the respective contract unit prices. Payment for temporary precast concrete barriers will be made at the contract unit price per each. The concrete in temporary precast barriers furnished by the contractor will be identified by lots and shall be subject to pay adjustments in accordance with Table 901-6 and Note 1 therein. Size, sampling, and testing of each concrete lot shall be in accordance with the Materials Sampling Manual.

Payment for additional movements of temporary concrete barriers will be made per movement of each barrier when required in the plans and directed by the engineer.

Payment for portable changeable message signs will be made at the contract unit price per each during the life of the contract.

Payment will be made under:

Item No.	Pay Item	Pay Unit
713-01	Temporary Signs and Barricades	Lump Sum
713-02	Temporary Pavement Markings	Linear Foot
713-03	Temporary Pavement Markings (Broken Line)	Mile
713-04	Temporary Pavement Markings (Solid Line)	Mile
713-05	Temporary Pavement Legends and Symbols	Each
713-06	Temporary Reflectorized Raised Pavement Markers	Each
713-07	Temporary Precast Concrete Barrier (Contractor Furnished)	Each
713-08	Temporary Precast Concrete Barrier (Department Furnished)	Each
713-09	Temporary Portable Barrier	Each
713-10	Temporary Precast Concrete Barrier Movement	Each
713-11	Portable Changeable Message Signs	Each

Section 714
Sodding

714.01 DESCRIPTION. Furnish, haul, plant, roll, water, and maintain live grass sod at locations shown on the plans or as directed.

714.02 MATERIALS. Use approved sod consisting of either field grown grass or nursery grown grass delivered in rolls or slabs.

Field grown sod shall be Bermuda grass, carpet grass, or other approved grass native to the sodded area.

Nursery grown sod shall be Centipede, Tifway Bermuda, Nomow Bermuda, Common Bermuda, or St. Augustine grass.

Fertilizer shall comply with 1004.01 and agricultural lime shall comply with 1004.02.

Sod shall be free from noxious weeds or other vegetation. Obtain water from any source. Do not use brackish, chemically contaminated, or oily water.

714.03 GENERAL CONSTRUCTION REQUIREMENTS. Cut sod with approved sod cutters. Mow the designated area when necessary. Cut sod to a minimum soil depth of $1^1/_2$ inches for field grown grass and 1 inch for nursery grown grass. Cut to a uniform width and in convenient lengths for handling. Retain soil on roots of sod when excavating, hauling, and planting. Obtain the services of an established soil testing entity to coordinate soil sampling, perform testing and analyses, and prepare recommendations for materials and procedures to be used during the pre-planting phase of new turf establishment. When practical, perform soil testing early enough to permit agricultural lime or other additives (if required) to be applied sufficiently in advance of planting so that the soil pH adjustment will occur before planting. Test and analyze samples to determine pH and fertility conditions. Use the test results and recommendations to determine the quantities of agricultural lime and fertilizer required for pre-planting applications. Furnish a copy of the test report with recommendations to the engineer. Testing will be at no direct pay. Consider probable time of application when making agricultural lime recommendations.

Do not use sod cut more than 48 hours before placing unless authorized. Inferior appearing sod will not be accepted.

Watering required in connection with digging, storing, or hauling sod will be at no direct pay.

714.04 HANDLING SOD. Place slab sod flat, grass side up on pallets containing no more than 50 square yards of slab sod. Cover the sod and haul to the planting site with soil intact. Off-load sod and place as close as practical to the planting site.

714.05 PLANTING. Pulverize areas to receive sod to a depth of at least 3 inches then level the surface and clear the area of weeds, grass, stones, and other debris. If required, add lime when the area is being pulverized. Broadcast approximately 90 percent of the fertilizer over the area to receive sod, and broadcast the remaining 10 percent over sod after placing and rolling. Upon delivery to the planting site, transfer sod onto the surface soil. Water sod and/or areas to be sodded as directed. Place sod with no space between edges. Stagger slab and roll edges to avoid a continuous seam along the line of flow. Along the edges of such staggered areas, do not offset individual strips less than 6 inches. Pull by hand all slab edges that do not fit closely together without stretching or tearing. Peg when necessary. When directed, top dress the sod surface with sand to smooth-out uneven spots.

714.06 ROLLING. Roll sod after planting with smooth drum sod rollers. Where rolling is impractical, tamp sod by approved hand methods.

714.07 WATERING. Watering shall be the responsibility of the contractor unless otherwise noted. Keep all sodded areas thoroughly watered for a minimum of 60 calendar days after installation. Water shall not contain elements toxic to the plant life. Water immediately after completing each day of sod installation. Water every day, preferably in the morning. After the first week, reduce watering to every other day, tapering off to just twice a week by the third week. Do not drive watering trucks over newly installed turf areas. All watering will be at no direct pay.

714.08 PERIOD OF ESTABLISHMENT – SODDING. The sod establishment period to obtain a healthy stand of grass plants shall begin on the first day that sod is placed under the contract and shall end 60 calendar days after the last day of the sodding operation. Provide a written calendar time period for the sod establishment period. When there is more than one

sod establishment period, describe the boundaries of the sodded area covered for each period. Modify the sod establishment period for inclement weather, shut down periods, or for separate completion dates of areas.

If applying a pesticide becomes necessary to remove a pest or disease, submit a pesticide treatment plan to the engineer for approval by the District Roadside Development Coordinator. The contractor will be responsible for the application of any approved chemicals.

714.09 SATISFACTORY STAND OF GRASS PLANTS. The Department will evaluate sod for species and health. All sod must be moist and growing at the time of acceptance. A satisfactory stand of sod from the sodding operation shall be living sod, uniform in color and leaf texture. Bare spots shall not exceed 2 inches square. Joints between sod pieces shall be tight and free from weeds and other undesirable growth.

Repair or reinstall unsatisfactory areas of sod and repair eroded areas. If at the end of the establishment period, the growth or stand of the sod is unacceptable, the sod will be rejected.

714.10 MEASUREMENT. Sodding will be measured by the square yard along the surface of completed sodding.

714.11 PAYMENT. Payment for sodding will be made at the contract unit price per square yard, which includes all labor, materials, equipment, and incidentals necessary to complete the work.

Payment will be made under:

Item No.	Pay Item	Pay Unit
714-01	Sodding	Square Yard

Section 715
Topsoil

715.01 DESCRIPTION. Furnish and place topsoil on areas designated on the plans or as directed.

During the pre-planting phase, obtain the services of an established soil testing entity to coordinate soil sampling, perform testing and analyses, and prepare recommendations for materials and procedures to be used. When practicable, perform soil testing early enough to permit agricultural lime or other additives (if required) to be applied sufficiently in advance of planting so that the soil pH adjustment will occur before planting. Test and analyze samples to determine pH and fertility conditions. Use the test results and recommendations to determine the quantities of agricultural lime and fertilizer required for pre-planting applications. Provide a copy of the test report with recommendations to the engineer. Testing will be at no direct pay. When making agricultural lime recommendations, consider probable time of application.

715.02 MATERIALS.

715.02.1 Topsoil: When available, the topsoil shall be the existing surface soil stripped and stockpiled. When requiring additional topsoil beyond the available topsoil from the stripping operation, deliver topsoil and amend as recommended by soil tests. Provide soil tests prior to delivery of topsoil to the site. Determine the quantities and type of soil amendments required to meet local growing conditions for the seed species specified.

Test delivered topsoil, existing soil in smooth graded areas, and stockpiled topsoil for particle size, pH, organic content, textural class, chemical composition, and soluble salts. Topsoil shall be free from slag, cinders, stones, lumps of soil, sticks, roots, trash, or other material over $1^1/_2$ inches diameter. Topsoil shall be free from viable plants and plant parts. Topsoil shall also be free from debris, noxious weeds, toxic substances, or other materials harmful to plant growth. Topsoil shall have a minimum PI of 4, a maximum PI of 12, a pH of 5.5 to 8.0, a minimum organic content of 2 percent, and shall be capable of supporting adequate vegetation.

715.02.2 Soil Amendments: Deliver soil amendments to be blended with the topsoil to the site either in the original, unopened containers bearing the manufacturer's chemical analysis or in bulk. Provide a chemical analysis for bulk deliveries.

Existing topsoil meeting the above requirements within construction limits may be used in accordance with 106.02. If adding agricultural lime or organic matter to a soil to bring topsoil into conformance with these specifications, it shall be at no direct pay.

715.03 CONSTRUCTION REQUIREMENTS. Scarify areas to receive topsoil as directed. Uniformly spread topsoil over the areas to a depth of 6 inches and roll to a uniform surface with a culti-packer or other suitable equipment.

715.04 MEASUREMENT. Topsoil will be measured by the cubic yard in approved hauling vehicles at the point of delivery in accordance with 109.01, which includes testing and the test report.

Preparation of the areas to receive topsoil will not be measured for payment. Agricultural lime treatment of areas to receive topsoil will be measured in accordance with 718.04.2.

715.05 PAYMENT. Payment for topsoil will be made at the contract unit price per cubic yard, which includes testing and test reports as well as all labor, materials, equipment, and incidentals necessary to complete the work.

Payment will be made under:

Item No.	Pay Item	Pay Unit
715-01	Topsoil	Cubic Yard

Section 716
Vegetative and Fiber Mulch

716.01 DESCRIPTION. Furnish and place an approved vegetative or fiber mulch with a tacking agent on seeded areas to promote seed germination and growth while temporarily protecting the soil from erosion.

716.02 MATERIALS. Mulching materials and tacking agents shall comply with 1004.04. Notify the engineer at least 7 calendar days in advance of commencing operations so that the mulch can be inspected and approved prior to use.

Deliver vegetative and fiber mulch in bales or bags of uniform size. Store mulching materials in accordance with 106.09. Protect mulch stockpiles from the weather.

716.03 GENERAL CONSTRUCTION REQUIREMENTS. Mulching shall follow seeding operations within 48 hours. Do not spray mulch on structures. Remove all stains on structures and roadway appurtenances resulting from the mulch or the tacking agent; leave the surface in acceptable condition. During windy conditions, make adjustments in operations to ensure uniform spreading.

Repair damage to seeded areas and re-seed at no direct pay.

716.03.1 Tacked Vegetative Mulch: Distribute vegetative mulch uniformly over the seeded area by blowing it simultaneously with an approved tacking agent. Space jet nozzles in the muzzle of the blower to provide a uniform coating of the mulch as it blows through the nozzles.

The tacked vegetative mulch shall be loose enough to allow air to circulate, but compact enough to partially shade the ground and reduce the impact of rainfall on the soil surface. Begin mulching at the top of the slopes and extend downward. Use blower pipe extensions where slopes cannot be reached by the blower.

716.03.2 Fiber Mulch: The application equipment shall have a built-in agitation system with an operating capacity sufficient to agitate, suspend, and homogeneously mix the fiber mulch, water, and any tacking agent that is part of the fiber mulch system. Keep the fibers in uniform suspension throughout the mixing and distribution cycles. The slurry distribution lines shall be large enough to prevent stoppage. Hydraulic spray nozzles in the discharge line shall provide uniform distribution of the slurry.

716.04 SPREADING RATES.

716.04.1 Tacked Vegetative Mulch: Apply vegetative mulch at a rate of $1^1/_2$ to 2 tons of mulch per acre simultaneously with the tacking agent. Final application rates for the tacking agent shall be in accordance with the application rate shown in the Approved Materials List for the particular type of vegetative mulch being used.

716.04.2 Fiber Mulch: Apply fiber mulch as a slurry in accordance with the manufacturer's recommendations. The application rate of the tacking agent, if not pre-blended with the fibers by the manufacturer, shall be in accordance with the application rate shown in the Approved Materials List for the particular type of fiber being used.

716.05 MANUAL SPREADING. In order to prevent defacing structures, manually spread mulch around structures. When performing manual spreading, place mulch in a shredded condition and then spray the tacking agent over the mulch at the specified rate.

716.06 MEASUREMENT. Vegetative mulch and fiber mulch products will be measured for payment by the ton of mulch material used. The weight of vegetative mulch to be used in determining spread rates of mulch and tacking agents will be the product of the number of bales or bags used and the average weight per bale or bag as determined on scales provided by the contractor which have been certified by a qualified independent scale service or the Weights and Measures Division, Louisiana Department of Agriculture and Forestry.

Quantities of tacking agents used with vegetative mulch will be measured by the pound and be determined by marked container count.

Tacking agents used with fiber mulch are considered part of the system and shall be included in the unit cost for the system.

716.07 PAYMENT. Payment for vegetative mulch and fiber mulch products will be made at the contract unit prices per ton and includes all materials including tacking agents, labor, equipment, and other incidentals necessary to complete the work.

Payment will be made under:

Item No.	Pay Item	Pay Unit
716-01	Mulch	Ton

Section 717
Seeding

717.01 DESCRIPTION. Prepare seed beds, furnish, and sow grass seed on the areas designated on the plans or as directed. Unless otherwise specified, apply seed either mechanically in a dry condition under this section or with hydro-seeding equipment in accordance with Section 739. Obtain the services of an established soil testing entity to coordinate soil sampling, perform testing and analyses, and prepare recommendations for materials and procedures to be used during the pre-planting phase of new turf establishment. When practical, perform soil testing early enough to permit agricultural lime or other additives (if required) to be applied sufficiently in advance of planting so that the soil pH adjustment will occur before planting. Test and analyze samples to determine pH and fertility conditions. Use the test results and recommendations to determine the quantities of agricultural lime and fertilizer required for pre-planting applications. Provide a copy of the test report with recommendations to the engineer. Testing will be at no direct pay. Consider probable time of application when making agricultural lime recommendations.

717.02 MATERIALS. Materials for seeding shall comply with the following sections and subsections:

Topsoil	715
Fertilizer	1004.01
Agricultural Lime	1004.02
Seed	1004.03

Obtain water from any source. Do not use brackish, chemically contaminated, or oily water.

717.03 SOIL AREAS. Select seed on the basis of five general soil areas as follows:

1. Alluvial soils of Mississippi and Red River bottoms.
2. Mississippi terraces and loess hill soils.
3. Coastal plain soils (rolling, hilly, and flatwoods areas in the central, northern, and eastern parts of the state).
4. Coastal prairie soils.
5. Ouachita River bottom.

717.04 PREPARATION OF SEED BED. Prepare seed beds by disking, harrowing, or other approved methods. On slopes of 3-horizontal-to-1 vertical and flatter, till the soil to a minimum of 4 inches depth. On slopes between 3-horizontal-to-1 vertical and 1-horizontal-to-1 vertical, till the soil to a minimum of 2 inches depth by scarifying with heavy rakes or other methods. Use rototillers where soil conditions and length of slope permit. On slopes 1-horizontal-to-1 vertical and steeper, no soil tillage is required. Maintain drainage patterns as indicated on the plans. Completely pulverize areas compacted by construction operations by tillage. Conform to topsoil requirements in Section 715 for soil used for repair of surface erosion or grade deficiencies. Apply the pH adjuster, fertilizer, and soil conditioner during this procedure. The prepared surface shall be a maximum 1 inch below the adjoining grade of any surfaced area. Blend new surfaces to existing areas. Lightly rake the completed surfaces to remove debris.

717.04.1 Lawn Area Debris: Remove debris and stones greater than 5/8 inch in any dimension from surfaces designated on the plans as lawn areas, or as directed by the engineer.

717.04.2 Field Area Debris: Remove debris and stones greater than 2 inches in any dimension from the surface.

717.04.3 Protection: Protect prepared surface areas from compaction or damage by vehicular or pedestrian traffic and surface erosion.

717.05 PERMANENT SEEDING. Plant seed within the dates shown in Table 717-l, unless otherwise permitted in writing.

717.06 TEMPORARY SEEDING. During construction, place temporary seeding as directed. Temporary seeding may be any of the types given in Table 717-1. Annual rye grass or clover is the only acceptable seeding types for winter cover.

Use of a hydro-seeder will be allowed in accordance with Section 739.

717.07 WATERING. When necessary due to dry conditions, periodically water seeded areas until final acceptance at no direct pay.

717.08 SEED ESTABLISHMENT PERIOD. The seed establishment period shall begin on the first day of seeding work under the contract and

shall end 3 months after the last day of the seeding operation. The contractor shall provide a written calendar time period for the seed establishment period. When there is more than one seed establishment period, the boundaries of each seeded area covered by each period shall be described. The seed establishment period may be modified for inclement weather, shut down periods, or for separate completion dates of areas as approved by the engineer.

Bermuda turf will be considered to be established and completed when the areas to be turfed have produced Bermuda grass stems or runners which overlap adjacent Bermuda grass growth over a minimum of 85 percent of the entire area and no spots greater than 4 square feet are void of Bermuda grass. This will be determined by the engineer in random sampling on a square yard basis.

Acceptance of the entire turfed area will be based on the engineer's visual inspection and determination of the required coverage. Acceptance will be based on coverage by Bermuda grass only. Dying or dead turf and eroded areas will not be accepted. Correct deficient areas at no direct pay. Partial areas will not be accepted unless determined by the engineer to be in the best interest of the Department.

717.09 MEASUREMENT. Seeding will be measured by the pound.

717.10 PAYMENT. Payment for temporary and permanent seeding will be made at the contract unit price per pound, which includes all labor, materials, equipment, and incidentals necessary to complete the work.

Payment will be made under:

Item No.	Pay Item	Pay Unit
717-01	Seeding	Pound

Table 717-1
Seeding

Type	Seed Mixtures [1]	lbs/acre	Soil Area [2]	Planting Dates
A	Hulled Bermuda	30	1,2,3,4,5	Mar-Sep
B	Hulled Bermuda Crimson Clover[3]	20 25	1,2,3,5	Feb-Mar
C	Kentucky 31 Fescue Unhulled Bermuda	25 20	1,2,3,4,5	Sep-Feb
D	Unhulled Bermuda Crimson Clover [3]	20 40	1,2,3,4,5	Sep-Feb
E	Pensacola Bahia [4]	25	1,2,3,5	Mar-Sep
F	Ball Clover Unhulled Bermuda	25 20	1,2,3,4,5	Feb-Mar
G	Vetch (Common) Unhulled Bermuda	40 20	1,2,3,4,5	Sep-Oct
H[5]	Browntop Millet Hulled Bermuda Pensacola Bahia	6 20 15	1,2,3,4,5	Mar-Jul
I	Annual Rye	30	1,2,3,4,5	Sep-Jan [6]

[1] Only Hulled Bermuda or Unhulled Bermuda shall be planted in rest areas.
[2] See 717.03.
[3] Inoculated prior to planting with proper bacterial culture.
[4] Type E shall be used only upon the approval of the Roadside Development Specialist.
[5] This planting mixture is to be used in the Kisatchie National Forest areas only.
[6] Annual Rye grass shall not be planted before September 20. Annual Rye grass may be planted as late as January 15 if climatic conditions and soil temperatures will allow germination.

Section 718
Fertilizer and Agricultural Lime

718.01 DESCRIPTION. Furnish and apply commercial fertilizer and agricultural lime on the areas designated on the plans or as directed.

718.02 MATERIALS.

718.02.1 Fertilizer: Fertilizer shall be an approved brand complying with 1004.01. Fertilizer shall be either 8-8-8, 12-12-12, 13-13-13, or 16-16-16. Deliver fertilizer in sack or bulk.

Fertilizer tablets shall be an approved brand complying with the requirements of 1004.01. Deliver the fertilizer tablets in sealed waterproof containers.

718.02.2 Agricultural Lime: Agricultural lime shall comply with 1004.02. Deliver either in sacks or bulk.

718.03 APPLICATION.

718.03.1 Commercial Fertilizer: Uniformly broadcast fertilizer over areas to be fertilized by either hand or machine methods. The rate of fertilizer application shall be as shown in Table 718-1.

Table 718-1
Fertilizer Application Rates

Type Fertilizer	Pounds Per Acre
8-8-8	1000
12-12-12	667
13-13-13	615
16-16-16	500

Other balanced fertilizer may be used at the inverse proportional rate. After surface dressing, thoroughly incorporate fertilizer into the soil by light disking, harrowing, or roto-tilling. When dressing the surface by hand, the fertilizer may be applied before final raking and leveling.

718.03.2 Agricultural Lime: Uniformly spread agricultural lime at a minimum rate of 2 tons per acre with a spreader. Apply lime prior to seeding, topsoil placement, and slab sodding. Lime may be applied in conjunction with fertilizer. After lime application, disk the areas and harrow

or roto-till to incorporate lime or lime-fertilizer into the top 3 inches to 6 inches of soil.

718.03.3 Hydro-seeding: If using hydro-seeding methods, fertilizer and lime may be included in the seeding slurry. When specified by the manufacturer, water soluble, liquid fertilizer, or liquid lime will be allowed for hydro-seeding product applications. Hydro-seeding will be measured for payment under Section 739.

718.04 MEASUREMENT.

718.04.1 Fertilizer: Fertilizer will be measured by the pound. The estimated quantity shown on the plans is based on Type 8-8-8 fertilizer. If other types of fertilizer are used, the measured quantities will be multiplied by the factors of Table 718-2 to determine pay quantities.

Table 718-2
Fertilizer Factors

Type	Factor
12-12-12	1.5
13-13-13	1.625
16-16-16	2.0

When using other balanced fertilizers, the factor will be determined by dividing the type of fertilizer by eight.

718.04.2 Agricultural Lime: Agricultural lime will be measured by the ton.

718.05 PAYMENT. Payment for fertilizer will be made at the contract unit price per pound. Payment for agricultural lime will be made at the contract unit price per ton.

The contract unit prices for fertilizer and agricultural lime will include all labor, materials, equipment, and incidentals necessary to complete the work.

Payment will be made under:

Item No.	Pay Item	Pay Unit
718-01	Fertilizer	Pound
718-02	Agricultural Lime	Ton

Section 719
Landscaping

719.01 DESCRIPTION. Furnish and plant various plant materials in accordance with the plans and the specifications.

719.02 LANDSCAPE CONTRACTOR REQUIREMENTS. Conduct landscaping operations in accordance with Section 107, the requirements of the Louisiana Horticulture Law and Regulations, and this section. The landscape contractor shall have in his possession, and maintain in good standing, a Landscape Horticulturalist license, a Landscape Irrigation Contractor license, and a Category 6 Pesticide Applicators license obtained through the Louisiana Department of Agriculture and Forestry. The landscape horticulturalist shall conduct his operations in accordance with Section 107 of the *Louisiana Standard Specifications for Roads and Bridges*, and the requirements of the Louisiana Horticulture Law and Regulations. If landscape maintenance, irrigation maintenance and/or herbicide/chemical application will be performed by the contractor's sub-contractor, proof of insurance and required Louisiana licensing procedures shall be followed.

719.03 MATERIALS. Materials for landscaping shall comply with the following sections and subsections, and the following requirements:

Mortar Sand	1003.08.1
Fertilizer	1004.01
Agricultural Lime	1004.02
Mycorrhizal Inoculant	1004.06
Water Management Gel	1005.05

Obtain water from any source. Do not use brackish, chemically contaminated, or oily water.

Individual plant varieties, species, and size will be indicated on the plans.

719.03.1 Pine Bark for Bed Preparation and Backfilling: Furnish pulverized and well-rotted ground pine bark for use in preparing backfill soil and the soil in bed areas.

719.03.2 Backfill Soil: Prepare backfill soil as follows:

5 parts topsoil
3 parts pine bark for bed preparation and backfilling
1 part sand
1 part manure
Water Management Gel
Mycorrhizal Inoculant

Add water management gel and mycorrhizal inoculant at the manufacturer's recommended rate for individual trees or plants at the time of planting.

Remove all clods, stones, roots, gravel, and other debris from the excavated soil. Mix backfill soil with excavated soil from individual planting holes at a rate of three parts backfill soil to one part excavated soil. Use this mixture to backfill individual planting holes.

Add fertilizer in accordance with Section 718 except as specified herein.

719.03.3 Water Management Gel: Furnish and place water management gel in accordance with 1004.05.

719.03.4 Mycorrhizal Inoculant: Furnish and place mycorrhizal inoculant in accordance with 1004.06.

719.03.5 Topsoil: If shown on the plans, furnish and place topsoil in accordance with Section 715.

719.03.6 Top Dressing Mulch: The top dressing mulch furnished and placed shall be pine bark, pine straw, hardwood mulch, or cypress bark.

When specifying pine bark mulch, use mulch consisting of $^1/_2$-inch minimum size chipped pine bark. Reject excessively "green" and/or decomposed pine bark.

719.03.7 Fertilizer Tablets: Furnish and place fertilizer tablets in accordance with 1004.01.

719.04 QUALITY AND EXTENT OF WORK. The engineer will notify the Department's Landscape Architect before work begins to coordinate the planting operation with the landscape contractor. Plant in accordance with accepted landscaping practices. Approved plant materials shall be container

grown or balled and burlapped. Transport, plant, fertilize, prune, water, and maintain as necessary to ensure healthy plant growth.

719.05 PLANT MATERIALS. Plants will be subject to approval at the project site before planting. Trees and other plant materials will be inspected by the Department's Landscape Architect, with the landscape contractor present. Enhancement projects require approval from the entity's consultant. Remove all rejected plant material from the site and locate acceptable plant material from other nursery sources at no direct pay.

719.05.1 State and Federal Regulations: Plant materials shall be free from injurious insect pests and plant diseases, and be subject to regulations of Federal and State Departments of Agriculture. Shipments of plants shall comply with nursery inspection and plant quarantine regulations of the states of origin and destination. Obtain proper certificates for movement of nursery stock intrastate and interstate; comply with all other requirements before and during movement or shipment of plants. A copy of the Certificate of Inspection shall accompany each delivery.

719.05.2 Plant Names: Scientific and common plant names shall comply with the current edition of *Hortus third*. Plants shall be true to name and legibly tagged. Make no substitutions for the types, species, quantities, or sizes of materials specified without prior written permission. Present sufficient evidence that the specified plants cannot be obtained and that the substituted plants are essentially equal to the plants specified.

719.05.3 Grading Standards: Grade plants in accordance with the latest edition of *American Standards for Nursery Stock*, as published by the American Nursery and Landscape Association, unless otherwise specified.

719.05.4 Plant List: A complete list of plants will be shown on the plans including botanical name, common name, quantity, height, caliper, etc. Sizes of stock shown are the minimum acceptable sizes.

719.05.5 Quality and Source of Plants: Furnish nursery grown plants, unless written permission is obtained to use selected native stock. This permission will be granted only if native stock is better suited or superior in quality to plants obtained from a nursery.

Furnish plants and trees that equal or exceed the measurements specified in the Plant List. Measure before pruning, with branches in normal position. Dimensions for height and spread refer to the main body of the plant and not from branch tip to branch tip. The determining measurements for trees shall be caliper and/or height as described in the Plant List. Measure caliper of

the trunk 6 inches above the ground level for sizes up to and including 4 inches. If the caliper at 6 inches above the ground level exceeds 4 inches, the caliper should be measured at 12 inches above the ground. Trees shall have a habit of growth which is normal for the species. Furnish plants that are healthy, vigorous, and free from insects, diseases, and injuries. Do not trim or cut leaders or main branches of trees.

719.05.6 Balled and Burlapped Plants: Balled and burlapped plants shall be dug with firm, natural balls of soil of sufficient diameter and depth to encompass the fibrous and feeding root system necessary for full recovery of the plant. Furnish balls that are firmly wrapped with burlap or similar material and bound with twine, cord, or wire. Water balled and burlapped plants prior to transportation and keep moist until planted.

719.05.7 Container Grown Plants: Reject container grown stock which has become pot bound or in which the plant is out of proportion (larger) to the size of the container. Furnish stock with a fibrous, cohesive root system. Do not remove container grown plants from the container until just before planting and take care to prevent root system damage. Water container grown plants prior to transportation and keep moist until planted.

719.05.8 Handling and Storage: Protect balled and burlapped plants from drying out by covering the root system with mulch, wood chips, or suitable materials; water the root system and foliage as necessary. Protect plants from drying winds and sun as directed.

Lift plants from the bottom only, not by stems or trunks. Plants will be rejected if the root ball is cracked or loosened.

719.05.9 Delivery and Receipt of Plant Materials: Notify the engineer at least 48 hours before delivery of plant materials to the project. Provide an invoice for each shipment showing plant sizes and varieties in the shipment.

719.05.10 Inspection: Plant materials shall be subject to inspection and approval at any time during the life of the contract. Plants will be rejected for any of the following reasons:

1. Excessive abrasions of bark;
2. Dried out root system;
3. Excessive dead wood;
4. Dried up wood;
5. Excessive sun scald injuries;
6. Undeveloped and weak top or roots;
7. Crooked or one-sided development of tops;
8. No straight leaders on trees normally having them;

9. Broken or removed leaders;
10. Untrue types or sizes;
11. Not complying with federal and ftate laws or regulations bearing on inspection and certificates;
12. Excessively damaged soil of root balls;
13. Root balls dug from loose soil which will not properly ball;
14. Excessive circling roots in container grown stock; or
15. Dead plants and plants otherwise not complying with these specifications.

Replace rejected material with new plant material of the same kind at no direct pay.

719.06 CONSTRUCTION METHODS.

719.06.1 Seasonal Operations: Unless otherwise directed by the engineer in writing, the planting season is between November 1 and April 15.

Suspend work when the ambient temperature falls below 32°F, excessive wind velocity, frozen or saturated ground, or continuation of prevailing weather would likely cause unsatisfactory results. Complete planting as early as practical in the planting season.

When the only landscape work on the project consists of shrub planting at dead-end road installations, perform planting at any time during the year, provided the ambient air temperature is above 32°F and weather and ground conditions are suitable for planting. Provide container grown plants at dead end road installations.

719.06.2 Pruning: If necessary, prune plant material on the project in accordance with the plan details.

Limit pruning to the removal of injured twigs and branches or as directed. Leave the normal shape of the plant intact unless otherwise directed by the Department's Landscape Architect. Selective pruning may be required on trees of special type or character at no direct pay.

719.06.3 Soil Testing: Obtain the services of an established soil testing entity to coordinate soil sampling, perform testing and analyses, and prepare recommendations for materials and procedures to be used during the pre-planting phase. When practical, perform soil testing early enough to permit agricultural lime or other additives (if required) to be applied sufficiently in advance of planting so that the soil pH adjustment will occur before planting. Test and analyze samples to determine pH and fertility conditions. Use the test results and recommendations to determine the quantities of agricultural lime and fertilizer required for pre-planting

applications. Consider probable time of application when recommending agricultural lime. Furnish a copy of the test report with recommendations to the engineer. Testing will be at no direct pay.

719.06.4 Location of Plants: Locate plants in accordance with plans or as directed by the engineer or landscape architect.

719.06.5 Setting Individual Plants Not in Beds: Dig the planting-hole three times the width of the root ball of the plant. Make the sides of the planting-hole slope away from the center of the hole so as to resemble a shallow bowl. Loosen any smooth sides and hardpan to a depth as required below the bottom of the hole or to such depth that any moisture is allowed to move freely. Build a mound in the center of the plant hole with excavated material for the plant to sit on. Set plants plumb and at such level that, after settlement, a normal relationship of the root crown of the plant with the ground surface will be established. Plant trees so that the trunk flare is partially visible. Removing soil from the top of the root ball to find the trunk may be required. Place each plant in the center of the planting hole. When plants are set, tamp backfill soil under and around the base of each root mass to fill all voids. Plant in backfill soil complying with 719.03.2. Thoroughly settle backfill by watering and tamping to minimize settling and leaning of plant material. Stake plants 6 feet tall and greater in accordance with applicable nursery practices or as shown on any details provided. Locate all staking materials within the saucer. The cost of staking is included in the cost of the individual plants not in a bed. Maintain all plant material in a vertical position for the contract period. On balled and burlapped stock, prior to backfilling, cut and remove all wire or cord from the root balls and stems. Remove the burlap from the root ball and plant hole. On container grown stock, remove the container, scarify, and spread circling roots horizontally before backfilling. Backfill soil, mulch, and staking are included in the cost of individual plants not in beds. Notify the engineer in writing of any problems before installing the trees.

After planting has been completed, form a saucer using excavated material around each plant as shown in the planting details. Extend saucers to the limits of the planting holes for trees and shrubs. No saucers are required in areas of bed preparation. Shrubs in lines or groups may share a common saucer around their perimeter.

719.06.6 Setting Individual Plants (Bed Preparation Mulch Beds): A mulch bed surrounds individual plants planted in a mass. A mulch bed does not contain bed preparation materials from Table 719-1. The bed shape shall be approved by the engineer. All grass and weeds shall be

removed mechanically or by chemical means and all debris shall be removed from the area. Soil shall be loosened and lumps broken to a minimum depth of 6 inches within the mulch bed area. After individual plantings have been completed, a saucer shall be formed using excavated material around each plant as shown in the planting details or they may share a common saucer around their perimeter. The area shall be treated with an approved pre-emergence herbicide in accordance with the manufacturer's recommendations and a trench shall be created around the perimeter in an aesthetically pleasing form separating the grass and bed areas prior to placing mulch. The cost of the top dress mulch used in a mulch bed is paid under the top dressing mulch item.

719.06.7 Fertilizer: Furnish and place either granular or tablet commercial fertilizer at the specified rate in accordance with this section and 718.03.1. Mix fertilizer with backfill soil before backfilling. Equally place the recommended amount of fertilizer tablets in the upper 2 inches of backfill soil, 2 inches from the root ball, or in accordance with the manufacturer's recommendations.

Use fertilizer tablets in individual plant holes, separate from bed areas. After the tree or shrub has been placed, apply the manufacturer's prescribed amount and spacing of tablets for the specified plant size.

719.06.8 Agricultural Lime: Furnish and place agricultural lime in accordance with Section 718 to adjust the soil pH.

719.06.9 Backfilling: Take care in placing backfill along the sides and over the root mass of plants. Place backfill to three-quarters the depth of the ball on the sides and water uniformly on the sides of the root mass to allow settlement of the plant. Straighten, raise, or replant plants that settle or lean before or after watering.

Spread excavated material not used as backfill or for saucers on areas of the project as directed or dispose of in accordance with 202.02.

719.06.10 Water: Furnish and apply water in sufficient quantities for proper irrigation of the plants at no direct pay.

719.06.11 Bed Preparation: The bed shape shall be approved by the engineer. Remove grass, weeds, sticks, roots, stones, and other debris from the planting bed. Treat the planting bed with an approved pre-emergence herbicide in accordance with the manufacturer's recommendations. Roto-till the planting bed to the specified depth and add the materials of Table 719-1. Mix water management gel and mycorrhizal inoculant into the top 4 inches of soil at the rate recommended by the manufacturer prior to planting or seeding. Spread the bed preparation

material over the bed area, then rake or roto-till into the soil to produce a uniformly mixed layer.

Table 719-1
Bed Preparation Material

Material	Per 1000 Sq Ft
Mortar Sand	3 cubic yards
Peat Moss	3 cubic yards
Manure	3 cubic yards
Pine Bark	7 cubic yards
Fertilizer 8-8-8 (Or Other Balanced Equivalent At Proportional Rates)	25 pounds
Mycorrhizal Inoculant	per manufacturer
Water Management Gel	per manufacturer

Create a trench around the entire bed. Build all beds as "raised" beds. Rake beds smooth and remove dirt lumps, stones, sticks, grass, and other foreign matter. Finish grades of bed trenches next to walks or buildings shall be from 1 to 2 inches below finish grade of adjoining surfaces unless otherwise shown on the plans or as directed.

719.06.12 Mulching: Place mulch uniformly to the specified depth on and within the planting saucers and bed areas, then water. Avoid placing mulch directly against the trunks of trees and the stems of shrubs. Do not mulch individual plants not in beds more than 3 inches deep.

719.06.13 Weeding: Remove weeds from bed areas, the planting basin of each plant and groups of plants, and the saucer. Mow for a radial distance of 5 feet around individual plants not in beds. Cut the grass in the 10-foot circle to a satisfactory height. Use selective herbicides when approved by the District Roadside Development Coordinator. Contact-type herbicides shall be compatible with plant material. Weed as directed to maintain a neat appearance throughout the period of establishment and replacement.

719.07 PERIOD OF ESTABLISHMENT AND REPLACEMENT. Upon completion of planting, and provided that all plants are in place, living, and conforming to these specifications, this portion of the contract will be given provisional acceptance.

719.07.1 Period of Establishment: Care for planted and mulched areas for a period of establishment, which shall be one full growing season, after provisional acceptance is made. A full growing season shall begin April 16 and extend one full year until April 15 of the next year. Complete planting any time during the planting season specified in 719.06.1. If planting is completed prior to April 16, the growing season shall begin at provisional acceptance and extend to April 15 of the following year. Any extension of the planting season past April 15 shall result in an extension of the period of establishment to October 31 of the following year. During this period of establishment, preserve plants in a healthy, growing condition. Such plant establishment work shall include cultivation, weeding, watering, pruning, controlling insects, pests, disease, and other work determined necessary by the engineer to ensure healthy plant growth.

Contact the engineer every week and outline activities which will be performed on the project. Failure to contact the engineer weekly and perform activities will result in a 1 percent reduction of the landscape contract amount, for each week of noncompliance before final payment. Weed in the vicinity of plants, place mulch, and water the plants as required. During the period of establishment, maintain a neat and clean appearance of planting areas.

719.07.2 Replacement: Remove and replace plants that show signs of failure to grow at any time, or which are so injured or damaged as to render them unsuitable for the purpose intended, as determined by the engineer after consultation with the Department's Landscape Architect. Unless otherwise directed by the engineer, replace unsuitable plants within 15 calendar days after the engineer marks or otherwise indicates that the plants shall be replaced. Failure to comply in the time allotted will result in having the costs of these replacement plants deducted from the contract amount upon final payment, but the contractor shall remain liable for the original contract specifications.

When replacing plants, comply with the spacing and size requirements originally specified for the plants being replaced. Use the same species for replacement ground cover plants as originally specified for the ground cover being replaced. Other replacement plants shall be the same species as the plants being replaced unless the engineer, after consultation with the Department's Landscape Architect, approves the substitution of alternative species of plants in accordance with the provisions in this subsection.

Furnish and install replacement plants at no cost to the Department.

719.07.3 Semifinal Inspection: A semifinal inspection by the contractor and the engineer will be held two weeks prior to the end of the period of establishment to determine the acceptability of plants. Perform replacement planting, as required, in accordance with 719.06 and 719.07.2.

Replace unsatisfactory plants in kind, quantity, and size with live, healthy plants installed as originally specified. Use substitute varieties of plants only when approved. Only these replacements made at this time will not require a period of establishment. All plants that must be replaced at the semifinal inspection will be replaced at the contractor's expense.

Upon completion of plant replacements and prior to final acceptance of the project, weed around plants and remove discarded materials, rubbish, and equipment from areas of the right-of-way affected by operations. Remove staking from trees unless otherwise directed by engineer.

719.07.4 Final Acceptance: Final inspection of plant material will be held approximately two weeks after replacement planting has been completed. Final acceptance will be made if all plants are in place, alive, and in conformance with plans and specifications.

Replace plants that are unsatisfactory at the time of final inspection of the project in kind, quantity, and size with live, healthy plants installed as originally specified. Use substitute varieties of plants only when approved. These replacement plantings shall be made at no cost to the Department.

719.08 MEASUREMENT. Furnishing and planting the various types and sizes of plant materials will be measured per each. No measurement for payment will be made for plant hole preparation, backfill material, fertilizer tablets, water, staking, plant maintenance, or plant replacement of individual trees and shrubs either inside or outside of bed areas.

Bed preparation and top dressing mulch will be measured by the square yard.

When including an item for "Landscaping" in the contract, the furnishing and planting of all required plant materials under the contract will be measured on a lump sum basis.

719.09 PAYMENT. Payment for furnishing and planting the various types and sizes of plant materials will be made at the contract unit price per each.

Payment for bed preparation and top dressing mulch will be made at the contract unit prices per square yard. Payment for mulch required for individual tree and shrub planting will be included in the contract unit price

for the plant and not as top dressing mulch. When including an item for "Landscaping" in the contract, payment will be made at the contract lump sum price.

Partial payment during the period of establishment will be limited to 75 percent of the contract price upon provisional acceptance. Midway through the period of establishment, if the project engineer's records show that plants have been properly maintained and replacement plantings have been completed, 15 percent of the contract price for landscaping items will be paid, minus any reduction in accordance with 719.07.2. At final acceptance, if the project engineer's records show that plants have been properly maintained and replacement plantings have been completed, the remaining 10 percent of the contract price for landscaping items will be paid, minus any reduction in accordance with 719.07.1 and 719.07.2.

Payment for adjustment of pH will be made in accordance with 109.04.

Payment includes all labor, materials, equipment, and incidentals necessary to complete the work.

Payment will be made under:

Item No.	**Pay Item**	**Pay Unit**
719-01	Plants	Each
719-02	Top Dressing Mulch	Square Yard
719-03	Bed Preparation	Square Yard
719-04	Landscaping	Lump Sum

Section 720
Erosion Control Systems

720.01 DESCRIPTION. Furnish and place erosion control systems in accordance with plan requirements for use as soil retention blankets on slopes or as flexible channel liners in ditches.

720.02 MATERIALS.

720.02.1 General: Erosion control systems shall comply with 1018.15. The manufacturer's installation plan and hardware (staples, stakes, etc.) are considered part of the system and shall be the same as that used during the evaluation for source approval.

Use the type of erosion control system shown on the plans. A higher grade system may be substituted for a lower grade system within the same application (slope protection or flexible channel liners), if there is no additional cost to the Department.

720.02.2 Acceptance: Pretested lots of erosion control systems will be accepted based on a Certificate of Delivery showing DOTD Lot Numbers and laboratory numbers representing the pretested material, including hardware. Sample erosion control systems that are not accompanied by a Certificate of Delivery in accordance with DOTD S613. Sample installation hardware, additives such as tackifiers, and any other component of the system not covered above at the rate of one item per type per size or one quart per manufacturer's lot in accordance with DOTD S601. Submit all samples to the Materials and Testing Section. Furnish a copy of the approved installation plan with each shipment to the project.

720.02.3 Packaging: Package materials so as to maintain the quality of the product throughout handling. Identify each package with the manufacturer's name, product name, manufacturer's lot number, by the DOTD Lot Number corresponding to that shown on the Certificate of Delivery.

720.03 EQUIPMENT. Furnish and maintain equipment necessary to satisfactorily perform the work. Equipment for hydraulically applying fiber mulch shall be equipped to eject the thoroughly wet mulch material at a uniform rate equal to the manufacturer's recommendations or as designated by the plans to provide the mulch coverage specified.

720.04 CONSTRUCTION REQUIREMENTS. Install erosion control systems in accordance with the approved installation plan, no later than 48 hours after completion of seeding or sodding operations. Install all staples flush to the ground, penetrating all layers of overlapped or adjacent rows.

720.04.1 Slope Protection: Construct slopes to the required grade, fertilize, and seed prior to application of erosion control systems. At the time of coverage, the area to be covered shall be free of ruts, clods, stones, roots, or other foreign matter that will prevent close contact of the blanket with the soil. Place rolled products or mats with netting only on one side with the netting exposed and the fibers in contact with the soil.

720.04.2 Flexible Channel Liners: Prepare channel slopes in accordance with 720.04.1. Place flexible channel liners beginning at the downstream end and proceeding in an upstream direction.

720.05 MAINTENANCE. Maintain the areas on which erosion control systems have been placed until final acceptance of the project. This shall consist of the repair of damage by erosion, wind, fire or other cause. Repair such areas to reestablish the condition that existed prior to placing the erosion control systems at no direct pay. Repair may include fertilizing, seeding, mulching, or sodding as required.

720.06 MEASUREMENT. Erosion control systems, including hardware, will be measured by the square yard of surface area covered.

720.07 PAYMENT. Payment for erosion control systems will be made at the contract unit price per square yard and includes all materials, labor, equipment, and other incidentals necessary to complete the work. Required burial of ends and edges, overlaps, and hardware will not be measured for payment.

Payment will be made under:

Item No.	Pay Item	Pay Unit
720-01	Erosion Control System	Square Yard

Section 721
Mowing, Trimming, and Debris Collection

721.01 DESCRIPTION. Mow grass and weeds; trim overhanging branches, vegetation, and trees; and collect and remove trimmings and debris within the highway right-of-way or as directed. Mowing shall be coordinated with existing mowing contracts for areas that are adjacent to the construction area if possible.

721.02 EQUIPMENT. Rotary mowers will normally be utilized in the mowing of the right-of-way; however, sickle bar mowers, side mounts, flail, or boom mowers may be used to mow around bridges, culverts, sign posts, mailboxes, delineators, guardrails, wet areas and ditches, etc., as approved by the engineer. Other types of grass-cutting equipment may be used, provided they have been approved by the engineer prior to use. Equip all rotary mowers with safety chains to prevent damage to property by flying debris from under the mower. Maximum cutting widths for rigid frame rotary mowers shall be 9 feet. Hand trimming will be required in some areas.

Shield mowers to prevent flying debris from the cutter blades in accordance with OSHA 29 CFR § Part 1928.57. Equip all vehicles and equipment used in performance of the work with amber flashing lights. Equip tractors with two fender mounted amber flashing lights, two red flags mounted on each side of the rollover protective structure (ROPS) cage, a plainly visible rear mounted slow moving vehicle emblem, and working headlights.

Keep all mowers in good operating condition and maintain to provide a clean sharp cut at all times. All equipment will be inspected by the engineer for safety devices and suitability for the work prior to being placed in operation. Properly maintain all safety devices and keep functioning at all times.

721.03 GENERAL CONSTRUCTION REQUIREMENTS.

721.03.1 Debris Collection: Pick up and properly dispose of all trash and debris ahead of the mowing operation. Clean all grassed areas, ditches, paved roadside shoulders, fences, and under overhead bridges within the project limits. Pick up all trash uncovered by the mowing operations within 48 hours. Remove trash and debris picked up and piled or bagged on the

roadside from the right-of-way by the end of the same work day. Do not pile bagged trash and debris on travel lanes or paved shoulders.

721.03.2 Mowing Operations: Furnish sufficient number and types of equipment best suited to perform the work. Adjust mowers for a cutting height of approximately 5 inches. Provide a safety vehicle equipped with warning lights to follow mowers, along with personnel and equipment to do the trimming. Trim directly behind the mower at a safe distance.

721.03.3 Mowable Areas: Mowable areas are defined as all of the grassed or vegetated areas of the right-of-way, extending from right-of-way line to right-of-way line or tree line to tree line or fence line to fence line as applicable, including but not limited to, banks of natural waterways, swale ditches, V-ditches, ditch bottoms, and slopes. Mowable areas also include areas under bridges and around guardrails, sign posts, delineators, curbs, culvert ends, trees, shrubs, plants, culvert head walls, bridge abutments, bridge or overpass columns and piling, and fences where mowing is required on both sides due to the presence of service roads, swale ditches, V-ditches, and slopes or other facilities. These areas may not be accessible to standard mowing equipment and may require hand trimming or specialized mowing equipment such as boom or side mount mowers.

Mowable vegetation is defined as any trees, vegetation, brush, etc., which is 2 inches in diameter or less measured 5 inches above the ground.

721.03.3.1 Divided and Undivided Highway and Frontage Roads: Mow all mowable areas within the right-of-way. Remove or cutback all overhanging vegetation or trees, regardless of size, which may hinder or prohibit mowing to the tree line or right-of-way line at no direct pay. Remove trimmings from the right-of-way or chip. Disperse chips to not interfere with drainage.

721.03.3.2 Right-of-Way Line: Include a mowable area strip approximately 7 feet wide along the fence line or right-of way line, if applicable and terrain permits. Remove all overhanging vegetation or fallen trees, regardless of size, which may hinder or prohibit mowing of this strip at no direct pay.

721.03.3.3 Natural Waterways Or Canals Crossing The Right-Of-Way: Cut all vegetation (weeds, grasses, vines, and trees) on the waterway banks (slopes), canal bottoms, in the median, beneath the interstate bridges, and in the right-of-way to the tree line or right-of-way fence line to within 5 inches of the ground by any means chosen except that all non-mowable vegetation shall be removed to ground level. Mowing of this area may require specialized equipment such as weed trimmers and boom or slope

mowers. There will be no additional payment for this work if the area involved is included in the mowable acreage listed elsewhere.

721.03.3.4 Catch Basins and Gutters: Perform the mowing operation without buildup of grass clippings on catch basins and in gutters. If the mowing operation deposits grass clippings on catch basins and in gutters, remove such clippings from the entrance to the catch basin by hand or other methods acceptable to the engineer.

Mow as close as practical to all fixed objects exercising extreme care not to damage trees, plants, shrubs, delineators, catch basins, or other appurtenances which are part of the facility.

721.03.4 Hand Trimming: Hand trim around fixed objects such as sign posts, curbs, delineators, culvert ends, trees, shrubs, plants, guardrails, culvert head walls, bridge abutments, bridge or overpass columns and piling, and fences where mowing is required on both sides due to the presence of service roads or other facilities, etc. as directed by the engineer. Trim behind the mowing operation by no later than 24 hours.

721.03.5 Use of Herbicides: Herbicides may be used around signs, guardrails, culvert ends, bridges revetments, ditches, laterals, fences, etc., to reduce the volume of hand trimming. General spraying of herbicides to control vegetation and spraying around shrubs, bushes and trees will not be allowed except as otherwise provided in these specifications. Remove vegetation treated with herbicides by manual or mechanical means to ground level after the manufacturer's suggested time period for the herbicide to affect the plant growth. Prior to the use of any herbicides, obtain the approval of the District's Roadside Development Coordinator for use, type, and rate of application of any herbicide.

The contractor shall have in his possession, and maintain in good standing, a category 6 Pesticide Applicators license obtained through the Louisiana Department of Agriculture and Forestry. The contractor shall conduct his operations in accordance with Section 107 and the requirements of the Louisiana Horticulture Law and Regulations.

721.03.6 Inaccessible Areas: Mowing will not be permitted when, in the opinion of the engineer, soil and weather conditions are such that the right-of-way will be damaged. However, provide specialized equipment such as boom or slope mowers to mow areas not accessible to standard mowing equipment. Use caution to assure that mud is not tracked onto the road surface.

Skip the following areas when mowing:

1. Swamp areas or areas having ponded water.

2. Areas with large rocks or other obstructions that might damage the mowers.

3. Shoulder edge when shoulder material has been left in a windrow.

721.03.7 Safety Requirements: Conduct mowing operations in a manner that regards the safety and convenience of the public as a prime importance. All equipment and traffic control devices shall be in accordance with the MUTCD and these specifications.

721.04 MEASUREMENT. Mowing will be measured by the cycle and will include all labor, equipment, materials, and incidentals required to complete the work. Trimming and debris collection will not be measured for payment.

721.05 PAYMENT. Payment for mowing will be made at the contract unit price per cycle.

Payment will be made under:

Item No.	Pay Item	Pay Unit
721-01	Mowing	Cycle

Section 722
Field Laboratories

722.01 DESCRIPTION. Furnish laboratory buildings at the project sites for soils and aggregates testing.

These laboratories are to be provided exclusively for the use of Department personnel involved in the Department's Quality Assurance Program.

722.02 GENERAL REQUIREMENTS. Field laboratories shall be weather tight and constructed of wood, metal, masonry, or other approved materials for the purpose of housing the personnel, testing equipment, records, and reports as necessary for the Quality Assurance Program.

Each laboratory shall have a minimum floor space of 160 square feet, or other approved size, that provides sufficient space with a minimum ceiling height of 7 feet. The laboratory shall have at least one outside door and have sufficient windows. The laboratory buildings shall have electric lighting and power outlets as directed. Provide fume hoods with electric exhaust fans of such size and location as to ensure continuous removal of hazardous fumes and air borne particles during testing operations. Secure the building and contents by suitable lock and catches. Afford the engineer access to the laboratory at all times and provide him or her with a set of keys as necessary.

Laboratory buildings shall be constructed, furnished, maintained, and located as approved. Provide suitable desks, chairs, and file cabinets for personnel using these facilities. Construct sturdy work benches along at least one wall, or as directed, to provide sufficient work area for the types of tests being conducted. Laboratory buildings shall be heated and air conditioned, and with sanitary facilities. Provide a telephone for Departmental use.

The laboratories may be used for successive phases of a project without additional compensation.

722.03 PROJECT SITE LABORATORY. Field laboratory buildings at the project site shall be movable types which can be placed near construction areas. Move the building to various locations on the project as directed.

722.04 EQUIPPED PROJECT SITE LABORATORY. Furnish, install, and maintain the following equipment in satisfactory condition, as needed, for soils and aggregates testing throughout the life of the project:

1. An automatic soil compaction hammer capable of compacting both standard and modified proctors, with arrangement for both 12-inch and 18-inch drops and 4-inch and 6-inch molds and adjustable hammer weights from 5.5 to 10 pounds. The specifications for the hammer shall be in accordance with TR 415, Field Moisture-Density Relationships, and TR 418, Moisture-Density Relationships as specified for each mold diameter. The equipment shall include two molds of each size.

2. A compaction block or pedestal composed of portland cement concrete shall be furnished for use with the automatic compaction hammer. The block shall weigh a minimum of 200 pounds. The hammer shall be secured to the block.

3. An electronic scale capable of measuring in both English and metric units having a capacity of 30 pounds or more with a sensitivity of 0.1 pounds.

4. An electronic scale capable of measuring in metric units having a capacity of 2 kilograms or more with a sensitivity of 0.1 grams.

5. Two electric or gas hot plates and drying pans. An open flame hot plate shall be equipped with suitable shield to disperse heat evenly and to prevent direct contact of the flame with the drying pan. The hot plates shall be of sufficient size to accommodate the drying pans.

6. A stable internet connection with sufficient bandwidth to handle electronic communications and data file transfers between the site laboratory and the Department's server applications.

The automatic soil compaction hammer and scales noted above shall be calibrated by an independent laboratory on an annual basis and will be verified by the engineer.

722.05 MEASUREMENT. Project site laboratories furnished, equipped, satisfactorily maintained, moved as directed, and subsequently removed from the project will be measured per each building.

722.06 PAYMENT. Payment for project site laboratories will be made at the contract unit price per each under:

Item No.	Pay Item	Pay Unit
722-01	Project Site Laboratory	Each
722-02	Project Site Laboratory (Equipped)	Each

Section 723
Granular Material

723.01 DESCRIPTION. Furnish and place granular material in accordance with these specifications and in conformity with the lines, grades, and typical sections shown on the plans or as directed.

723.02 MATERIALS. Granular material shall comply with 1003.09.

723.03 CONSTRUCTION REQUIREMENTS. Place, properly shape, and uniformly compact granular materials by approved methods to a minimum of 95 percent of maximum dry density. Maximum dry density will be determined in accordance with DOTD TR 415 or TR 418 and in-place density will be determined in accordance with DOTD TR 401. Do not displace granular materials during subsequent operations.

723.04 DIMENSIONAL TOLERANCES. When specifying net section measurement, the thickness and width of completed granular material courses will be checked for acceptance in accordance with DOTD TR 602. Correct areas with thickness and width deficiencies in excess of the following tolerances to plan dimensions by furnishing, placing, shaping and compacting additional materials as required at no direct pay.

723.04.1 Thickness: Under thickness shall not exceed 3/4 inch. Over thickness will be at no additional cost to the Department.

723.04.2 Width: Under width shall not exceed 6 inches. Over width will be at no additional cost to the Department.

723.05 MEASUREMENT.

723.05.1 Net Section: The net section quantities of granular material for payment will be the design volumes as specified in the plans and adjustments thereto. Design quantities are based on the horizontal dimensions and the compacted thickness of the granular material shown on the plans. Design quantities will be adjusted if the engineer makes changes to adjust to field conditions, if plan errors are proven, or if design changes are necessary.

723.05.2 Vehicular Measurement: Vehicular measurement of granular material will be by the cubic yard in approved hauling vehicles at the point of delivery in accordance with 109.01.

723.06 PAYMENT. Payment for granular material will be made at the contract unit price per cubic yard.

Payment will be made under:

Item No.	Pay Item	Pay Unit
723-01	Granular Material (Net Section)	Cubic Yard
723-02	Granular Material (Vehicular Measurement)	Cubic Yard

Section 724
Rumble Strips

724.01 DESCRIPTION. Construct rumble strips in accordance with the details shown in the plans and as directed.

724.02 MATERIALS. Vacant

724.03 CONSTRUCTION REQUIREMENTS. Before the construction of any rumble strips, demonstrate to the engineer that the equipment to be used can achieve a depression having well defined edges without snagging or tearing the finished pavement.

Provide a relatively smooth cut and a smooth interior finish with no more than 1/16 inch between peaks and valleys. Provide a uniform and consistent alignment of each cut in relation to the roadway throughout the project. Before opening the adjacent lane to traffic, ensure that all debris generated by a grinding process is removed and disposed of daily by vacuum or a method approved by the engineer. Do not use the debris generated by a grinding process in recycled asphalt.

When rumble strips do not meet the requirements of the contract documents, restore any pavement to the satisfaction of the engineer at no additional cost to the Department.

724.04 MEASUREMENT. The quantity of Rumble Strips (Centerline or Shoulder/Edge) to be paid for will be the plan quantity in miles, constructed and accepted. The plan quantity will be determined based on the roadway length. No deduction will be made for gaps.

The quantity of Rumble Strips (Intersection) to be paid for will be the plan quantity per each set as shown on the plans constructed and accepted.

The set would be three rumble clusters in one lane.

Acceptance measurements will be performed by the Department on a random basis to ensure conformance.

724.05 PAYMENT. Payment for Rumble Strips (Centerline) and Rumble Strips (Shoulder/Edge) will be made at the contract unit prices per mile. Payment for Rumble Strips (Intersection) will be made at the contract unit price per each set as shown on the plans. Payment will be full compensation for all labor, materials, equipment, tools, and incidentals necessary to

complete the work, including cleaning and preparing of surfaces, disposal of all debris, and protection of traffic.

Payment will be made under:

Item No.	Pay Item	Pay Unit
724-01	Rumble Strips (Centerline)	Mile
724-02	Rumble Strips (Shoulder/Edge)	Mile
724-03	Rumble Strips (Intersection)	Each

Section 725
Temporary Detour Roads

725.01 DESCRIPTION. Furnish construct, maintain, and subsequently remove temporary detour roads.

Plan details and specified materials for temporary detour roads indicate minimum requirements. Other approved designs and materials may be used at the option of the contractor.

725.02 MATERIALS. Materials for detour roads, except low profile runarounds, shall comply with applicable sections of these specifications.

Temporary culvert pipe shall be one of the types listed in Section 701. Temporary fencing shall be of a type acceptable to the engineer.

Temporary pavement markings shall comply with 1015.08.

725.03 CONSTRUCTION REQUIREMENTS.

725.03.1 General: Perform all necessary additional clearing and grubbing, and provide all necessary temporary fencing and culverts for detours. Place construction signs, warning devices, and pavement markings for detours in accordance with Section 713 prior to opening to traffic. Maintain detours in a satisfactory condition.

725.03.2 Detour Roads: Furnish all embankment material for detours and compact embankments by approved methods to the satisfaction of the engineer. When embankment is placed against slopes of existing embankments, remove from such slopes all grass, weeds, trash, brush, and other objectionable material and construct slopes to form steps as directed.

Perform base and wearing surface construction in accordance with applicable sections of these specifications.

Place temporary pavement markings complying with Section 713 on detours surfaced with asphalt concrete or portland cement concrete. Place these markings before the detour is opened to traffic. Remove existing markings in tie-in areas. Include temporary pavement markings to make tie-ins to existing striping in the cost of these markings.

725.03.3 Low Profile Runaround: Surface low profile runaround type detour roads with approved aggregate. Place aggregate surfacing to a minimum depth of 4 inches and a minimum width of 20 feet. Obtain the

engineer's approval of alignment and grade of runaround type detour roads. Provide satisfactory drainage for low profile detours.

725.03.4 Detour Bridging: Construct and remove temporary detour bridging in accordance with Section 817.

725.04 REMOVAL OF DETOURS. Upon completion of permanent construction and diversion of traffic thereto, remove detour roads, temporary fencing and culverts, eliminate construction scars, and seed and fertilize to restore the area to its original condition as directed. When not covered under other items, replace permanent fencing in kind as directed. Remove temporary markings on existing surfaces in accordance with Section 713.

725.05 MEASUREMENT.

725.05.1 Detour Roads: Temporary detour roads will be measured by the square yard of completed detour road surfacing.

725.05.2 Low Profile Runaround: Low profile runarounds will be measured per each runaround.

725.05.3 Incidentals: Additional clearing and grubbing, temporary fencing and culverts, will not be measured for payment.

When the contract does not include items for "Temporary Pavement Markings," these markings will be included in the items for "Temporary Detour Roads."

725.06 PAYMENT. Payment for temporary detour roads furnished, constructed, maintained, and subsequently removed will be made at the contract unit prices under:

Item No.	Pay Item	Pay Unit
725-01	Temporary Detour Roads	Square Yard
725-02	Low Profile Runaround	Each

Section 726
Bedding Material

726.01 DESCRIPTION. Furnish and place aggregate bedding material on geotextile fabric for drainage structures.

726.02 MATERIALS. Materials shall comply with the following subsections:

Plastic Soil Blanket	203.10
Bedding Material	1003.10
Geotextile Fabric	1019.01

726.03 PLACEMENT OF BEDDING. Place geotextile fabric in accordance with plan details prior to placing bedding material. Properly proportion and mix bedding materials prior to placement in the foundation. Take care to prevent damage to geotextile fabric during placement of bedding material. Place, shape, and uniformly compact bedding material to the satisfaction of the engineer.

Overlap or sew adjacent rolls of geotextile fabric. When rolls are overlapped, overlap a minimum of 18 inches, including the ends of the rolls. Assure that the top layer of the fabric is parallel with adjacent rolls and in the direction of bedding materials placement. When rolls are sewn, join adjacent rolls by sewing with thread made of polyester or a material with equivalent strength and durability. When field sewing, employ the J-seam or "Butterfly" seam with the two pieces of geotextile fabric mated together and turned in order to sew through four layers of fabric. Sew with 2 rows of Type 401, two-threaded locking chain stitch. Submit factory seams other than specified to the Materials and Testing Section for approval. When the ground is covered with water or supersaturated soil, sew the fabric.

Remove damaged fabric and replace with new fabric or cover with a second layer of fabric extending two feet in each direction from the damaged area.

Use material excavated below the established grade of the structure or dispose of it in accordance with Section 203.

Place a plastic soil blanket in accordance with 203.10 at structure ends when bedding material is exposed.

726.04 MEASUREMENT. Bedding material, including plastic soil material, completed and accepted, will be measured by the cubic yard (net section). The length and width will be measured horizontally to the theoretical points established by the plans for bedding material. The depth will be as shown on the plans or established by the engineer.

Geotextile fabric will not be measured for payment.

Necessary excavation and disposal of excess excavated materials will not be measured for payment.

726.05 PAYMENT. Payment for bedding material will be made at the contract unit price per cubic yard, which includes all labor, materials, equipment, tools, and incidentals necessary to complete the work.

Payment will be made under:

Item No.	Pay Item	Pay Unit
726-01	Bedding Material	Cubic Yard

Section 727
Mobilization

727.01 DESCRIPTION.

Mobilization consists of preparatory work and operations, including those necessary for movement of personnel, equipment, supplies, and incidentals to the project site; the establishment of offices, buildings, and other facilities necessary for work on the project; the cost of bonds and any required insurance; and other preconstruction expenses necessary for start of the work, excluding the cost of construction materials.

727.02 MATERIALS. Vacant

727.03 CONSTRUCTION REQUIREMENTS. Vacant

727.04 MEASUREMENT. Mobilization will be measured for payment as a lump sum.

727.05 PAYMENT. When the contract does not include a pay item for mobilization, no direct payment will be made for mobilization.

When the contract contains a pay item for mobilization, payment will be made at the contract lump sum price, subject to the following provisions:

Partial payments for mobilization will be made in accordance with the schedule of Table 727-1 up to a maximum of 10 percent of the original total contract amount, including this item. Payment of any remaining amount will be made upon completion of all work under the contract.

Table 727-1
Mobilization Payment Schedule

Percent of Total Contract Amount Earned	Allowable Percent of the Lump Sum Price for Mobilization
1st Partial Estimate	25
10	50
25	75
50	100

No payment adjustments will be made for this item due to changes in the work in accordance with Section 109.

When the contract includes a pay item for field laboratories under Section 722, payment for mobilization will exclude those facilities.

Payment will be made under:

Item No.	**Pay Item**	**Pay Unit**
727-01	Mobilization	Lump Sum

Section 728
Jacked or Bored Pipe

728.01 DESCRIPTION. Furnish and install pipe in embankments at the locations shown on the plans by jacking or boring in accordance with these specifications.

728.02 MATERIALS. Pipe materials shall comply with 701.02 and 1018.3. Pipe joints shall comply with 701.06. Corrugated metal pipe to be jacked or bored shall have corrugated bands a minimum of 24 inches wide with four lines of approved gasket material. Secure these bands by a minimum of four galvanized steel rods and lugs in accordance with the plans and as directed.

728.03 CONSTRUCTION REQUIREMENTS. In general, jack pipes 30 inches diameter and greater and bore pipes less than 30 inches diameter. Begin the work at the outfall end of pipe when possible. When the grade at the jacking or boring end is below ground surface, excavate suitable pits or trenches for conducting operations and placing joints of pipe. Provide adequate sheeting and bracing to prevent earth caving.

For pipe with bell joints, if the outside diameter of the pipe bell exceeds the outside diameter of the pipe barrel by more than 1 inch, either case the pipe or pressure grout its full length. Furnish and install an approved type and size casing, in accordance with these specifications. Pressure grout with approved materials placed by approved methods.

The method used shall not weaken or damage the embankment. Provide for approval a plan showing the proposed procedure, including backstop or jacking frame arrangement, pipe guides, position of jacks, and jacking head. Approval of this plan shall not relieve the contractor from responsibility for obtaining the desired result.

728.03.1 Jacking: Provide heavy duty jacks suitable for forcing pipe through the embankment. Apply equal pressure to all jacks and transmit the pressure to the pipe end through a jacking head. Design the jacking head so that pressure is uniformly applied around the ring of the pipe. Provide a backstop or jacking frame to adequately resist pressure of the jacks under load. Set pipe on guides properly fastened together to support the pipe in the

proper direction at correct grade. Provide suitable cushioning material, such as plywood, between sections of concrete pipe.

Excavate material ahead of the pipe and remove through the pipe. Do not extend excavation more than 24 inches beyond the forward end of pipe. When the character of embankment material dictates, reduce the excavation distance to prevent the embankment from being damaged. Dispose of excavated material in accordance with 202.02.

When excavating on the underside of pipe, conform to the contour and grade of the pipe for at least one-third the circumference of pipe. Provide a clearance of not more than 2 inches for the upper half of pipe, tapered to zero at the point where excavation conforms to the contour of pipe.

Construct a steel cutting edge around the forward end of pipe that will transmit pressures uniformly around the ring of the pipe.

Continue jacking without interruption to prevent pipe from becoming firmly set in the embankment.

Do not allow pipe to vary horizontally or vertically by more than 1/4 inch per 10 feet from established line and grade. Any variation shall be regular; no abrupt changes in direction will be permitted. Remove and replace any pipe damaged or misaligned in jacking operations at no direct pay.

728.03.2 Boring: Bore mechanically, using a pilot hole approximately 2 inches in diameter. Extend the pilot hole through the embankment and check for line and grade before boring begins. Maintain the same line and grade variations as specified for jacking. Use the pilot hole as the centerline of the larger diameter hole to be bored.

Use water and other fluids with boring operations only to lubricate cuttings. Jetting will not be permitted.

In unconsolidated soil formations, a gel-forming colloidal drilling fluid consisting of at least 10 percent high-grade bentonite may be used to consolidate cuttings of the bit, seal walls, and provide support of the hole, and furnish lubrication for subsequent removal of cuttings and installation of pipe.

Remedy overcutting in excess of 1 inch by pressure grouting the entire length of the installation.

Join pipe in accordance with Section 701.

728.04 MEASUREMENT. Quantities of jacked or bored pipe for payment will be the design lengths in linear feet as shown on the plans. Design quantities will be adjusted if the engineer makes changes to adjust to field conditions, if plan errors are proven, or if design changes are made.

Required excavation, sheeting, bracing, falsework, casing, joint materials, and grouting will not be measured for payment.

728.05 PAYMENT. Payment for jacked or bored pipe will be made at the contract unit price per linear foot, which includes all labor, materials, equipment, tools, and incidentals necessary to complete the work.

Payment will be made under:

Item No.	Pay Item	Pay Unit
728-01	Jacked or Bored Pipe	Linear Foot

Section 729
Permanent Signs

729.01 DESCRIPTION. Furnish and install traffic signs, dead end road installations, markers and delineators, with accessories, posts, and overhead spans of specified materials, sizes, shapes, weights, and designs.

In general, the work and materials comply with the MUTCD as modified by these specifications or as shown on the plans.

Fabricate signs in an approved plant.

The term "legend" shall mean border strip, letters, numerals, and symbols which convey the message on signs.

729.02 MATERIALS. Other than recycled aluminum sign panels and blanks, all materials shall be new stock conforming to the following:

729.02.1 Sign and Marker Sheeting: Sheeting material for sign panels, delineators, barricades, and other markers shall comply with Section 1015. All permanent signs shall meet the requirements of DOTD Type X.

729.02.2 Ferrous Metal: Ferrous metals shall comply with 1015.02.1. Reinforcing steel shall comply with Section 1009. Ferrous metal, except reinforcing steel, shall be galvanized in accordance with Section 811.

1. U-channel posts shall comply with 1015.02.1.3.
2. Square tubing shall comply with 1015.02.1.4.

729.02.3 Aluminum: Aluminum alloys for structural members shall comply with 1015.02.2. Aluminum sign panels shall comply with 1015.04.1.

729.02.4 Fittings: Structural bolts, nuts, washers, and miscellaneous hardware shall comply with 1015.02.3.

729.02.5 Guard Rail: Guard rail materials for dead end road installations shall comply with Section 1010.

729.02.6 Timber: Treated piling and timber for barricades in dead end road installations shall comply with Section 1014.

729.02.7 Concrete: Concrete shall be Class M complying with Section 901.

729.02.8 Flexible Sign Posts: Flexible posts for small signs, markers, and delineators shall comply with 1015.03.

729.02.9 Silk Screen Paste and Overlay Film: Silk screen paste shall comply with sheeting manufacturer's recommendations and with 1015.07.

729.03 GENERAL REQUIREMENTS.

729.03.1 Sign Face Design and Fabrication: Fabricate signs of Types A, B, D, and E; overhead signs; and sign face overlay panels in accordance with the MUTCD, the *Standard Highway Signs Booklet*, and the signing detail sheets of the plans.

Furnish shop drawings of sign faces for Types D and E, overhead signs, sign overlay panels, and for any non-standard sign faces of Types A and B not provided by the Department. Obtain approval of shop drawings from the Interstate Guide Sign Engineer before sign face fabrication begins.

729.03.2 Sign Mountings and Supports Fabrication: Furnish steel for vertical sign supports and trusses. Furnish steel sign supports for post mountings, and rigid steel or flexible posts for small signs, markers, and delineators. Before beginning work, notify the engineer in writing of proposed signing materials. Use the same signing materials throughout the project.

Fabricate sign mountings according to Section 807. Furnish fabrication and erection drawings of all sign mountings in accordance with 801.03 with the exception of standard roadside installations. Fabrication and erection drawings will be approved only after approval of sign face shop drawings. Do not fabricate sign mountings or construct sign footings before drawings are approved and distributed.

Welding shall comply with Section 809.

729.03.3 Material Sampling and Certification: Material sampling and certification for sign faces, sign mountings, U-channel posts, and square tubing shall be in accordance with the Materials Sampling Manual. Furnish NCHRP 350 or Manual for Assessing Safety Hardware (MASH) compliance documentation.

729.04 FABRICATION OF ALUMINUM SIGN PANELS.

729.04.1 General: Complete metal fabrication including shearing, cutting, and punching of holes prior to surface treatment of metal and application of sheeting. Cut metal panels to size and shape; free of buckles, warps, dents, cockles, burrs, and defects resulting from fabrication. Surface of sign panels shall be flat.

Splice plates joining sign panels shall not extend behind horizontal sills. Flat aluminum panels shall be a nominal 0.080 inch thick. Extruded

aluminum panels shall be 12 inches wide and have a nominal face thickness of 0.125 inches.

The completed product shall have a surface free of cracks, blisters, blemishes, and wrinkles.

729.04.2 Aluminum Surface Treatment: Provide surface treatment as specified herein or in accordance with approved recommendations of the reflective sheeting manufacturer.

729.04.2.1 Degreasing:

1. Vapor Degreasing: Immerse panels in a saturated vapor of organic solvent. Remove trademark printing with lacquer thinner or a controlled alkaline cleaning system.

2. Alkaline Degreasing: Immerse panels in a tank containing alkaline solutions, controlled and titrated to the solution manufacturer's specifications. Immersion time shall depend upon amount of contaminants present and thickness of metal.

729.04.2.2 Etching:

1. Acid Etch: Etch the panels in a 6 to 8 percent phosphoric acid solution at 100°F. Rinse the panels thoroughly with running cold water followed by hot water tank rinse.

2. Alkaline Etch: Etch pre-cleaned aluminum surface in an alkaline etching material controlled by titration, using time, temperature, and concentration specified by solution manufacturer. Rinse thoroughly. Remove smut with an acidic, chromium compound solution specified by solution manufacturer and thoroughly rinse.

729.04.2.3 Drying Panels: Dry panels with a forced hot air drier. Handle panels with clean canvas gloves or other approved methods between cleaning and etching operations and sheeting application. Protect cleaned panels from grease, oil or other contaminants prior to application of reflective sheeting.

729.04.3 Sheeting Application: Apply reflective sheeting in accordance with the approved written recommendations of the sheeting manufacturer. Apply reflective sheeting with no horizontal splices. Apply reflective sheeting directly to extruded panels with no more than two vertical splices per sign and no more than one vertical splice per individual panel. Carefully match sign faces comprised of two or more pieces of reflective sheeting for color at the time of sign fabrication to provide uniform appearance and brilliance, both day and night. Apply legend by one of the following methods:

729.04.3.1 Direct Applied: Legend shall be adhesive coated reflective sheeting as specified in 1015.05. Apply legend to provide a wrinkle-free surface.

729.04.3.2 Screened: Apply legend to sign faces by an approved screening process in accordance with the reflective sheeting manufacturer's recommendations. Completed screen surface shall be uniform in color, have sharp edges, be free of bubbles, show good workmanship, and be free of blemishes, streaks, or spotted areas. Screening on sheeting may be accomplished either before or after application of sheeting to panels.

729.04.3.3 Overlay Film: Apply legend to the sign faces by an approved transparent electronic cuttable overlay film compatible with the reflective sheeting to which it is applied. Apply in accordance with the recommendations of the manufacturer(s) of both the film and the reflective sheeting. Areas covered by film shall have sharp edges, be free of bubbles and blemishes, and show good workmanship.

729.04.4 Packaging: Before being packed, allow signs to dry according to manufacturer's recommendations. Slip sheet signs and pack to ensure arrival at their destination in an undamaged condition. Do not allow packaged signs to become wet during storage or shipment.

729.05 CONSTRUCTION REQUIREMENTS. When requiring removal of existing signs, coordinate sign removal operations as directed with new sign construction to provide for adequate signing to be in place at all times.

729.05.1 Sign Location: Sign support locations will be as shown on the plans or as directed by the engineer. After initial staking, obtain the engineer's approval of sign locations. Sign locations which are obviously improper because of topography, existing appurtenances, or other conflicting conditions will be adjusted to the closest desirable location. Determine post length at the established sign support location. Assure correct orientation, elevation, offset, and leveling of signs.

729.05.2 Sign Positioning:

729.05.2.1 Overhead Signs: Construct signs so that the top edge of the sign face is tilted towards oncoming traffic 3 degrees (approximately 1:20) from vertical and at right angles to the road, unless otherwise directed.

729.05.2.2 Road Edge Signs: Construct road edge signs with sign faces vertical. Place sign faces located less than 30 feet from the edge of travel lane at a 93 degree angle from the center of the travel lane. Place sign faces located 30 feet or more from the edge of the travel lane at an 87 degree angle from the center of the travel lane. Where the lanes divide or

are on curves or grades, orient sign faces to be most effective both day and night avoiding specular reflection.

729.05.2.3 Delineator and Object Marker Assemblies: Place these assemblies at least 24 inches beyond the outer edge of roadway shoulder, 24 inches beyond the face of curb, or in the line of guard rail.

729.05.2.4 Milepost Assemblies: Place these assemblies at least 6 feet beyond the outer edge of roadway shoulder.

729.05.2.5 Vertical and Horizontal Clearances: Vertical and horizontal clearances shall be in accordance with the MUTCD and as shown on the plans.

729.05.3 Sign Overlay Panels: When specified by the DOTD Sign Inspection Team, existing signs may be overlaid with new sign panels placed over the existing sign face. No partially overlaid signs shall be allowed to remain exposed overnight. Only one overlay shall be placed on a sign. When an overlay is to be placed on an existing overlaid sign, the previous overlay shall be removed prior to placement of the new overlay. Overlay panels shall conform to 729.04. Raised legends shall be removed from the existing sign face prior to placing the overlay panel. The size of the overlay panel shall not exceed the size of existing sign panel by more than 3 inches on any side. Overlay panels shall be attached to the existing sign with rivets complying with Subsection 1015.02. Rivets shall be placed on 12-inch centers (maximum) along the perimeter of panel and at panel splices, and on 24-inch centers (maximum) both vertically and horizontally in interior portions of each panel. Rivets shall be centered horizontally on panels less than 24 inches wide. A 4-inch x 4-inch shim with a nominal 0.080-inch thick aluminum plate shall be placed between existing panel and overlay panel at interior rivet locations. Shims cut from salvaged sign panels may be used. The existing sign panels shall be kept reasonably flat during installation of the overlay panels. Splice arrangement for overlay panels shall conform to the requirements for traffic sign blanks.

729.05.4 Recycled Aluminum Panels and Blanks: Recycled aluminum sign panels will be allowed for installation in accordance with the following requirements.

Recycled sign panels shall be the same alloy and temper required for new sign panels specified in Section 1015. They shall be free of corrosion and white rust and shall meet the required tolerances for flatness and thickness for new sign panels. The process for removing the old reflectorized or non-reflectorized sheeting shall not damage the chromate coating. Smelting, sanding, and chemical stripping processes for recycling will not be allowed.

Recycled signs will be inspected, sampled, and tested in accordance with current Departmental policy, except certified test reports will not be required. Furnish a materials guaranty that the materials conform to the requirements for recycling the sign panels. Each such panel must be labeled on the back as recycled and label shall be legible from the ground.

729.05.5 Excavation and Backfill: The contractor shall perform excavation for sign installation to levels and dimensions shown on the plans, or as directed. Perform excavation and backfill operations in accordance with Section 802.

729.05.6 Footings: Foundation piles, concrete, reinforcing steel, and anchor bolt assemblies shall comply with Sections 804, 805, 806, and 807.

See DOTD Roadside Traffic Sign Standard Details for stub heights.

Drive posts for ground mounted delineator, object marker, and milepost assemblies; no footings will be required.

729.05.7 Bolt Tensioning: Assemble slip plates for breakaway sign posts in the shop with high strength bolts tightened at a minimum bolt tension in accordance with 807.05. After field installation, tighten high strength bolts in the breakaway base connection to the specified minimum bolt tension. The bolt tension in both the slip plate connection and the breakaway base connection will be checked by the engineer. Correct bolt tensioning as required.

729.05.8 Cleaning and Clearing: Prior to erection, clean sign faces to allow adequate visibility of the sign. Any clearing or tree trimming required to provide for full sign visibility shall be in accordance with the plans, 729.08.9, or as directed.

729.05.9 U-Channel Posts: Drive U-channel posts for ground mounted small signs, markers, and delineators vertically to a minimum depth of 3 feet below natural ground using a suitable protective driving cap.

U-channel posts may be spliced where long lengths are required. The upper section shall overlap the lower section by at least 24 inches. The bottom edge of the upper section of the splice shall be a minimum of 24 inches above the ground. Secure the spliced sections with at least four 5/16 inch diameter hex head bolts spaced equally along the splice.

Splicing of U-channel posts will not be allowed when break-away footings are required.

729.05.10 Square Posts: Install square tubing posts with a break away as shown in the DOTD Roadside Traffic Sign Standard Details.

729.06 DEAD END ROAD INSTALLATIONS. Dead end road installations shall be of the specified type and located as shown on the plans. Construct timber barricade type installations in accordance with Section 812 and as follows. Set timber piling in full depth holes and backfill as directed or drive to required depth. Drive steel posts for other type installations with a suitable protective cap. Piles and posts shall be vertical. Construct guard rail in accordance with Section 704.

729.07 ACCEPTANCE OF SIGNS. After the installation of signs is complete, the Department's Sign Inspection Team will perform an inspection to ensure conformance with applicable plans, standards and project specifications. When specular reflection is apparent on any sign, adjust its positioning to eliminate the condition. Follow-up inspections may be conducted prior to acceptance, at the discretion of the Department's Sign Inspection Team.

Clean signs before the time of inspection. Reflective sheeting shall be free of cuts, scratches, breaks, or other defects which might allow moisture to infiltrate and damage reflective cells. Replace or repair nonstandard or otherwise unacceptable signs and traffic control devices as directed. Correct damage that is discovered at the time of the sign inspection.

In lieu of removing and replacing new sign faces that have been rejected, use sign overlay panels or recycled panels complying with 729.05.3 and 1015 to correct the deficiencies at no cost to the Department.

729.08 MEASUREMENT.

729.08.1 Sign Faces and Overlay Panels: Quantities for payment will be the design areas in square feet of sign faces as specified on the plans and adjustments thereto. Design quantities will be adjusted if the engineer makes changes to adjust to field conditions, if plan errors are proven, or if design changes are made. Material used in blanks and backing incidental to the sign face will not be measured for payment. In determining the area of sign faces, no deductions are made for corner radii or mounting holes. The area of octagonal signs and interstate shields is computed as the area of its smallest rectangle or square. The area of triangular signs is computed as the area of the triangle.

729.08.2 Post Mountings: Post sign mountings, including breakaway supports, will be measured per each post.

729.08.3 Overhead Mountings: Overhead sign mountings, including bridge fascia mountings, will be measured per each structure.

729.08.4 Delineator, Object Marker and Milepost Assemblies: Delineator, object marker, and milepost assemblies will be measured per each assembly.

729.08.5 Dead End Road Installations: Dead end road installations will be measured per each installation.

729.08.6 Footings: Concrete footings for overhead sign mountings will be measured per each footing. Footings and aprons for post sign mountings will not be measured for payment.

729.08.7 U-Channel Posts: U-channel posts will be measured per each unit installed when not part of an assembly.

729.08.8 Square Tubing: Square Tubing will be measured per each unit installed when not part of an assembly.

729.08.9 Clearing or Tree Trimming: Any clearing or tree trimming required by this section and not provided for elsewhere in the contract will be included in the contract unit price for signs.

The trimming of significant trees that have been identified under the Department's policy governing the treatment of significant trees within the highway right-of-way, zone of construction or operational influence, shall be performed or supervised by an ISA Certified Arborist with a minimum of five years of experience in arboriculture. All work must be done in compliance with current ANSI Z133 and *International Society of Arboriculture (ISA) Standards*. Documentation must be provided proving that the tree trimmer/climber has a minimum of three years full time experience in tree removal and pruning operations along public roads and near energized wires. Arborist(s) shall maintain an arborist license and insurances during the course of the project in accordance with 107.02 and 719.02. The Department has the right to request a new crew be assigned to perform the work if needed. Significant tree issues arising on construction and/or maintenance projects shall be managed by the District Roadside Development Coordinators, who shall seek the guidance of the Landscape Architectural staff when questions arise.

729.09 PAYMENT.

729.09.1 Sign Faces and Overlay Panels:

New Installation: Payment for sign faces on new sign supports will be made at the contract unit price per square foot, which includes furnishing, fabricating, and constructing the signs, and furnishing necessary attaching devices.

Furnish and Install: Payment for sign faces on existing sign supports will be made at the contract unit price per square foot, which includes

furnishing, fabricating and constructing the signs and furnishing necessary attaching devices.

Install: Payment for install only on existing sign supports will be for labor only. All sign faces and necessary mounting hardware will be provided by the Department. Payment will be made at the contract unit price per square foot.

Relocate: Payment will include dismantling of sign and reinstalling sign on a new sign support. Payment will be made at the contract unit price per square foot.

729.09.2 Post Mountings: Payment for post sign mountings will be made at the contract unit price per each, which includes furnishing, fabricating and constructing the support complete, ready for affixing signs, and includes required excavation, concrete, and reinforcement for footings and aprons, and mounting of signs or remounting of existing signs when required by the plans. Payment for sign layout will be made in accordance with Section 740.

729.09.3 Overhead Mountings: Payment for overhead sign mountings, including bridge fascia mountings, will be made at the contract unit price per each, which includes furnishing, fabricating and erecting the structure complete, ready for affixing signs, and mounting of signs or remounting of existing signs when required by the plans.

729.09.4 Delineator, Object Marker, and Milepost Assemblies: Payment for delineator, object marker, and milepost assemblies will be made at the contract unit prices per each, which includes posts. Concrete pads for milepost (reference location markers) will be paid for under Section 706.

729.09.5 Dead End Road Installations: Payment for dead end road installations will be made at the contract unit price per each, which includes piling, posts, barricades, sign materials, reflectors, and any required guard rail.

729.09.6 Footings: Payment for footings for overhead sign mountings will be made at the contract unit price per each, which includes excavation, piling, concrete, reinforcing steel, anchor bolt assemblies, and backfill. The concrete in footings will be identified by lots and shall be subject to pay adjustments in accordance with Table 901-5 and Note 1 therein. Size, sampling, and testing of each concrete lot shall be in accordance with the Materials Sampling Manual.

729.09.7 U-Channel Posts and Square Tubing: Payment for U-channel posts and square tubing will be made at the contract unit price per each which shall include all labor, equipment, tools, materials, and

incidentals necessary to complete the work, including splicing of posts, and when required removing and remounting of existing signs, and mounting of new signs.

Payment will be made under:

Item No.	Pay Item	Pay Unit
729-01	Sign (Type A)	Square Foot
729-02	Sign (Type B)	Square Foot
729-03	Sign (Type C)	Square Foot
729-04	Sign (Type D)	Square Foot
729-05	Sign (Type E)	Square Foot
729-06	Sign (Overhead Mounted)	Square Foot
729-07	Sign (Overlay Panel)	Square Foot
729-08	Mounting (_____Size Post)	Each
729-09	Mounting (Overhead Truss)(Ground Mounted)	Each
729-10	Mounting (Overhead Truss)(Structure Mounted)	Each
729-11	Mounting (Overhead Cantilever)(Ground Mounted)	Each
729-12	Mounting (Overhead Cantilever)(Structure Mounted)	Each
729-13	Mounting (Bridge Facia Mounted)	Each
729-14	Delineator Assembly (Ground Mounted)	Each
729-15	Delineator Assembly (Structure Mounted)	Each
729-16	Object Marker Assembly	Each
729-17	Milepost Assembly (Ground Mounted)	Each
729-18	Milepost Assembly (Structure Mounted)	Each
729-19	Dead End Road Installation (Type)	Each
729-20	Footings for Overhead Mounting (Type)	Each
729-21	U-Channel Post	Each
729-22	Square Tubing Post	Each

Section 730
Vacant

Section 731
Raised Pavement Markers

731.01 DESCRIPTION. Furnish and place raised pavement markers in accordance with the plans.

The contractor shall be responsible for field layout and alignment of raised pavement markers. Existing pavement striping shall generally be used as a guide in determining raised marker locations. The Department will replace obliterated striping prior to installation of raised pavement markers; however, if no striping exists or is obliterated at the time of raised marker installation, the contractor shall determine raised pavement marker locations in accordance with plan details or as directed.

731.02 MATERIALS.

731.02.1 Markers: Markers shall comply with 1015.09. Use the same product throughout the project. Markers shall be the specified class, type, color, size, and shape.

731.02.2 Epoxy Adhesive: Use Type I (Rapid Setting) or Type II (Standard Setting) epoxy resin adhesive system complying with 1017.03. Mix epoxy components and dispense adhesive in accordance with manufacturer's recommendations.

731.02.3 Bituminous Adhesive: Bituminous adhesive shall comply with 1015.09.3.2.

731.03 CONSTRUCTION REQUIREMENTS.

731.03.1 Weather Limitations: Do not apply markers when there is moisture on the surface.

731.03.1.1 Epoxy Adhesive: When using a standard set adhesive, do not apply markers at ambient air temperatures less than 50°F. When using a rapid set adhesive, application of markers will be permitted at ambient air temperatures between 35°F and 50°F, provided the adhesive is adequately heated to obtain proper viscosity for mixing and application, and is also identified as a rapid set type on container labels and Certificates of Delivery.

731.03.1.2 Bituminous Adhesive: Apply markers when the ambient air temperature reaches 35°F or greater, or in accordance with the manufacturer's recommendations.

731.03.2 Removal of Markers: Remove markers by methods that will not damage the pavement surface. Repair damage to pavement surface at no cost to the Department. After removing the markers, the debris and

residue shall become the property of the contractor and be disposed of properly.

731.03.3 Cleaning of Surfaces:

Surfaces, including ramps and gore areas, on which markers are to be applied must be cleaned of all materials that may reduce the bond of adhesive. Clean surfaces by blast cleaning or other approved methods which do not damage the surface. Blast cleaning equipment must have positive cutoff controls. Maintain surfaces in a clean dry condition until placement of markers.

731.03.4 Application of Markers: Place markers with bituminous adhesive on asphalt surfaces.

Place markers with Type I or II epoxy resin adhesive, or Type II or III bituminous adhesive on portland cement concrete surfaces.

Surfaces on which markers are to be placed shall be blown dry immediately prior to marker placement. Apply markers to surfaces with adhesive in accordance with the manufacturer's recommendations.

Do not place pavement markers on joints.

731.03.4.1 Epoxy Adhesive: Mixed adhesive shall have a uniformly grey color with no streaks of either black or white on the surface or within mixed adhesive. Voids in a cured undisturbed sample approximately 1/16 inch thick from the extrusion nozzle shall not exceed 4 percent by volume. Machine mixer and applicator shall be capable of accurately and uniformly proportioning the two components in a 1:1 ratio within 5 percent by volume of each component (*i.e.*, within 47.5 to 52.5 percent for each component). Perform periodic checks of proportioning equipment to determine the actual ratio of components. Do this by placing containers in front of the mixing chamber and measuring the actual volume of each component. Arrange equipment so it is possible to bypass the mixer to perform these periodic checks. Maintain temperature of adhesive between 70°F and 110°F before mixing. Apply adhesive in sufficient quantity to cause excess adhesive to be forced out around the perimeter of the marker. Maintain the temperature to prevent excessive flow of epoxy from the marker when installed. Fill voids in markers with an open grid pattern on bottom with adhesive immediately prior to placement.

731.03.4.2 Bituminous Adhesive: Heat and melt the adhesive in either thermostatically controlled double boiler type units utilizing heat transfer oil or thermostatically controlled electric heating pots. The melter/applicator unit shall be suited for both melting and pumping application through heated applicator hoses. Heat the adhesive as per manufacturer's recommendations and apply directly to the pavement surface

from the melter/applicator by either pumping or pouring. The area of the bituminous adhesive bed shall be a minimum of 6 inches in diameter. Apply markers to the adhesive within 10 seconds. Place the marker in the adhesive bed by applying downward pressure until the marker is firmly seated. Immediately remove adhesive on exposed surfaces of markers with soft rags moistened with mineral spirits or kerosene. Protect markers against impact until the adhesive hardens. Reheat and reuse the adhesive; however, do not exceed the pot life at application temperatures.

731.04 MEASUREMENT. Raised pavement marker installation will be measured per each marker furnished, placed, and accepted.

Raised pavement marker removal will be measured per linear mile.

731.05 PAYMENT. Payment for field layout and alignment of raised pavement markers will be in accordance with Section 740. Payment for installation of raised pavement markers will be made at the contract unit prices per each. Payment for removal of raised pavement markers will be made at the contract unit price per linear mile. Payment will include all labor, materials, equipment, and incidentals necessary to complete the work.

Item No.	Pay Item	Pay Unit
731-01	Non-reflectorized Raised Pavement Markers	Each
731-02	Reflectorized Raised Pavement Markers	Each
731-03	Removal of Raised Pavement Markers	Linear Mile

Section 732
Plastic Pavement Markings

732.01 DESCRIPTION. Furnish and place reflective pavement markings of hot applied thermoplastic or preformed (cold or hot applied) plastic at the locations shown on the plans. Plastic pavement markings include stripes, gore markings, lines, legends, and symbols.

732.02 MATERIALS.

732.02.1 Thermoplastic Markings and Glass Beads: Thermoplastic marking material shall be a plastic compound reflectorized by internal and external application of glass beads. Comply with 1015.10 and 1015.13. Width, thickness, and color of markings shall be as specified. Black thermoplastic pavement markings shall require skid-resistant filler in lieu of glass beads.

732.02.2 Preformed Plastic Marking Tape: Comply with 1015.11.

732.02.3 Surface Primer: Provide a single component surface primer or two component primer sealer for the appropriate application in accordance with 732.03.5. The primer shall form a continuous film that dries rapidly and adheres to the pavement. The primer material shall not discolor or cause any noticeable change in the appearance of the pavement outside of the finished pavement marking. Apply primer in accordance with the manufacturer's recommendation. Do not allow traffic over primed areas before applying thermoplastic.

732.02.4 Glass Beads: Glass beads for standard (flat) thermoplastic markings shall be in accordance with 1015.13.

732.03 CONSTRUCTION REQUIREMENTS.

732.03.1 Equipment for Standard (Flat) Thermoplastic Marking Material: Finished markings shall be continuous and uniform in shape, with clear and sharp dimensions. Applicators shall be capable of producing various widths of traffic markings. Applicators shall produce sharply defined lines and provide means for cleanly cutting off stripe ends and applying broken lines.

For new 90 mil application, equipment shall consist of an extrusion die or a ribbon gun that simultaneously deposits and shapes lines at a thickness of 90 mils or greater on the pavement surface.

When restriping 90 mils thickness onto existing thermoplastic markings, only a ribbon gun shall be used.

For 40 mils, only a spray application will be allowed.

732.03.2 Weather Limitations: Do not apply markings within 12 hours after rain, if moisture is present, or when the surface temperature or ambient temperature is below 50°F.

732.03.3 Cleaning of Surfaces: Clean surfaces, including ramps and gore areas, on which markings are to be applied of materials that may reduce adhesion of the thermoplastic marking materials to the pavement. Clean by blast cleaning or other approved methods, which do not damage the surface. Blast cleaning equipment must have positive cutoff controls. Keep surfaces clean and dry until placement of markings.

732.03.4 Removal of Existing Markings:

732.03.4.1 40 Mil Thickness: Remove existing thermoplastic markings that are flaking or peeling prior to placement of thermoplastic. Remove flaking or peeling material by mechanical sweeper or wire brush to the satisfaction of the engineer prior to thermoplastic application. After markings are removed, properly dispose of striping debris and residue.

732.03.4.2 90 Mil Thickness: Before placement of 90 mil or greater thermoplastic on portland cement concrete, remove existing thermoplastic markings regardless of condition. Apply a two part sealer before placement of any temporary paint or permanent thermoplastic. Asphalt sections do not require removal of thermoplastic unless otherwise noted on the plans. After markings are removed, properly dispose of striping debris and residue.

732.03.4.3 Intersection Markings, Legends and Symbols: Remove existing markings from the pavement surface. Apply 125 mils of new thermoplastic markings.

732.03.4.4 Preformed Plastic Markings (Tape): Remove existing markings to the pavement surface before applying the preformed plastic markings (tape).

Remove markings by methods that will not damage the pavement or bridge deck. After removing the markings, pick up and dispose of the debris and residue within 24 hours. Removal shall be to such extent that 75 percent of the pavement surface or bridge deck under the markings is exposed. At the end of each day's operations, the engineer may direct that temporary pavement markings complying with Section 713 be used in areas where existing markings have been removed and new markings not placed.

Satisfactorily remove temporary pavement markings prior to resuming thermoplastic marking operations.

Remove all markings made in error or not conforming to the traffic operation in use to the satisfaction of the engineer. Do not obliterate markings by painting with asphalt binder or other material.

732.03.5 Application of Surface Primer: When applying 90 mil thermoplastic, use a two component primer sealer prior to placement of thermoplastic materials on portland cement concrete surfaces and oxidized asphalt unless otherwise directed by the engineer.

When applying 40 mil thermoplastic, use a single component surface primer on portland cement concrete surfaces unless otherwise directed by the engineer.

When applying preformed thermoplastic, use primer as recommended by the manufacturer. Do not allow traffic over primed areas before applying thermoplastic.

732.03.6 Application of Markings: Install material in specified widths from 4 inches to 24 inches. Finished lines shall have well defined edges and be free of waviness. Measurements will be taken as an average through any 36-inch section of line. Offset longitudinal lines approximately 2 inches from longitudinal joints. A tolerance of + 1/2 inch and -1/8 inch from the specified width will be allowed, provided the variation is gradual. Lines should be squared off at each end without excessive mist or drip. Transverse variations from the control device up to 1 inch will be allowed provided the variation does not increase or decrease at the rate of more than 1/2 inch in 25 feet. Remove lines not meeting these tolerances and replace at no cost to the Department.

732.03.6.1 Thermoplastic Markings: For extruded or ribbon gun applied markings, the thickness of material, not including drop-on beads, shall not be less than 90 mils for lane lines, edge lines, black contrast, gore markings, and no less than 125 mils for crosswalks, stop lines, words, and symbol markings.

For spray applications the thickness of material, not including drop-on beads, shall not be less than 40 mils.

Apply glass beads to the molten surface of completed stripes by either a single drop or a double drop application depending on the thickness of the thermoplastic striping. Glass beads shall be uniformly distributed to ensure that the full width of the line is visible at night. For a 40 mil single drop application, the contractor has discretion on which beads to use in order to meet the retroreflectivity requirements. For the first drop of a 90 mil double drop application, use Type 4 beads at a minimum rate of 211 pounds per mile

based on a 4-inch solid line. The type of bead for the second drop is at the contractor's discretion; however, a smaller bead is typical. Black thermoplastic pavement markings require skid-resistant filler in lieu of glass beads.

732.03.6.2 Preformed Plastic Markings: Apply preformed plastic markings in accordance with the manufacturer's recommendation.

732.03.7 Field Testing of Roadway Markings: The contractor and the Department will field test the pavement markings in accordance with 1015.10, 1015.11, and Table 732-1. Failure to meet these requirements will require the contractor to replace the portion of the material shown to be out of specification as directed by the engineer.

Take initial readings within 30 days of application. Initial readings taken after 30 days must meet the same requirements as initial readings. Any late readings submitted after the 30 days will be considered initial readings. Take the initial retroreflectivity readings with a DOTD inspector present. Upon completion of testing, the DOTD inspector will immediately take possession of a copy of the retroreflectivity readings in either a hard copy ($8^1/_2$ inches x 11 inches) or electronic format on a USB drive, as noted below. Additionally, provide documentation to the Department that the instrument has been calibrated in accordance with the manufacturer's requirements, including the required annual factory calibration.

The Department reserves the right to inspect the striping and take additional readings six months to one year after the date of installation for the one year warranty.

For each material type, take a different set of readings in accordance with Table 732-1. Provide the data to the Department electronically in Microsoft Excel® (xls) format downloaded from the reflectometer data. Each spreadsheet shall have a header that states all of the following:

1. Project number;
2. Date material installed;
3. Type of material installed;
4. Interstate: Specify the route and direction and show the beginning mile-point to ending mile-point, of material installed; and,
5. State Route: Specify the route and direction. Also specify X number mile from intersection to X number mile from intersection, of material installed. (*Ex.* Route US 61 South; 0.10 Mile South of Old Hammond Highway to 0.2 Mile South of I-12).

The format for the excel spreadsheet shall be (description, date, and reading). In the description cell, the format shall be Route (*i.e.*, LA, US, or I), Direction (*i.e.*, N, S, E, or W), Mile Point, and Color (W or Y).

Examples: LA 115; W; 23; Y
I-10; S; 4; W

The project engineer will input data into the striping input form.

Table 732-1
Field Testing of Plastic Pavement Markings

Length of Roadway (Segment)	Minimum Required Readings
Less than 1 mi	10 evenly spaced readings per line[a, c]
1 mi to 6 mi	10 evenly spaced readings per line for each 1-mi segment [a, c]
Greater than 6 mi	5 evenly spaced readings per line for each 1-mi segment [b, c]
Stop Bars, Cross Walks, Chevrons, Hash Marks, and Legends and Symbols	Visual nighttime inspection only
8-inch Lines (Parallel to Roadway)	5 readings per line [b, c, d]

[a] Report average of 10 readings per line segment.
[b] Report average of 5 readings per line segment.
[c] Additional readings shall be taken if a defect is noticed by the engineer.
[d] Only initial readings are required.

General Notes:

1. Take readings on each line and color separately except as indicated below.
2. Adjacent lines applied at the same time are considered one line. Alternate readings between each line.
3. Take readings on dry, clean roadways.
4. Collect data in the direction lines were applied except for yellow centerlines on two lane roadways. For yellow centerlines on two lane roadways, collect data against the direction lines were applied.
5. On broken lines (skip striping), no more than two readings shall be taken per stripe, with readings 20 inches from ends of marking. This does not apply if using a vehicle mounted mobile unit.
6. Acceptance will be based on the average of each set of readings for each line segment.
7. Failure of the average reading for any segment to meet the specified minimum values will require replacement, corrective action or be subject to payment adjustments specified in Table 732-2.
8. Limits of replacement will be determined by the engineer.
9. Aggregate Surface Course projects will not be tested for retroreflectivity, but will be visually inspected at night for acceptance by the engineer.
10. No reflectance readings are required for black, red, or blue thermoplastic pavement markings.
11. Glass beads shall be uniformly distributed to ensure that the full width of the line is visible at night.

732.03.8 Guarantee: All work performed in accordance with this section shall be guaranteed in accordance with 104.05.

732.04 MEASUREMENT.

732.04.1 Plastic Pavement Striping: Plastic striping will be measured by the linear foot or mile, as specified. When not including a bid item for wider markings, the Department will measure the quantity by converting the actual length and width of lines installed to an equivalent length of the normal width line on that section of roadway.

732.04.1.1 Linear Foot: Measurement will be made by the linear foot of striping, exclusive of gaps.

732.04.1.2 Mile: Measurement will be made by the mile of single stripe. No deduction will be made for standard broken-line gaps; however, deductions will be made for the length of other gaps or omitted sections.

732.04.2 Plastic Pavement Legends and Symbols: Plastic legends and symbols will be measured per each legend or symbol. Each symbol includes all letters, lines, bars, or markings necessary to convey the message at each location.

732.04.3 Removal of Existing Markings: For two-lane highways, markings will be measured by the linear mile of full roadway width including shoulders. For multilane highways and ramps, the markings will be measured by the linear mile of the full roadway width including shoulders for each direction of travel.

Removal of pavement markings will include removal of lane lines, edge lines, gore markings, legends, symbols, raised pavement markers, and disposal of debris.

732.05 PAYMENT. Payment for the completed and accepted quantities of plastic pavement markings and removal of existing markings will be made at the contract unit prices, which include all labor, materials, equipment, and incidentals necessary to complete the work.

Table 732-2
Thermoplastic Payment Adjustment for Minimum Initial Retroreflectivity

Contract Unit Price [1], %	White (mcd\lux\sq m)		Yellow (mcd\lux\sq m)	
	40 mil	90 mil	40 mil	90 mil
100	250	375	175	250
90	230	360	165	230
80	220	340	155	220
50	200	325	150	200
Restripe	<200	<325	<150	<200

[1]The payment requirements are based on the project total average of all test segments (on a route) for initial reading for white and yellow separately in accordance with Table 732-1. Payment adjustments will be based on each identifiable route within the contract.

Payment will be made under:

Item No.	Pay Item	Pay Unit
732-01	Plastic Pavement Striping (____inch Width)	Linear Foot
732-02	Plastic Pavement Striping (Solid Line) (____inch Width)	Linear Mile
732-03	Plastic Pavement Striping (Broken Line) (____inch Width)	Linear Mile
732-04	Plastic Pavement Legends and Symbols (Type)	Each
732-05	Removal of Existing Markings	Linear Mile

Section 733
Vacant

Section 734
Rubblizing Portland Cement Concrete Pavement

734.01 DESCRIPTION. Rubblize existing reinforced or non-reinforced portland cement concrete pavement using a pavement-fracturing machine capable of delivering sufficient energy to rubblize the pavement full-depth in a manner that fractures the concrete slab into smaller pieces that eliminates slab action without damaging the subgrade. Thoroughly compact and seat the rubblized pavement with appropriate equipment as outlined in this specification. Either the resonant frequency breaker (Method 1) or the multihead breaker (Method 2) process may be utilized to rubblize and seat the pavement. Use only one of the methods (Method 1 or Method 2) on the project.

When using Method 2 on concrete pavements with thickness greater than 11 inches, the contractor may use a guillotine-breaking device with the engineer's approval, if pre-fracturing of the pavement is necessary to achieve rubblization size requirements without damage to the subgrade.

Perform the work in accordance with the lines, grades, and typical sections shown on the plans and as outlined in this specification.

734.02 EQUIPMENT.

734.02.1 Method 1 (Resonant Frequency Breaker Process):

734.02.1.1 Resonant Frequency Breaker Machine: Use a self-contained, self-propelled, resonant frequency breaker for rubblizing existing pavement that is capable of producing 2000 pound force blows at a rate of not less than 44 cycles per second with an amplitude of less than 1 inch.

734.02.1.2 Resonant Frequency Breaker Seating Equipment:

734.02.1.2.1 Steel-Wheel Vibratory Roller: Use a steel-wheel vibratory roller having a gross weight of not less than 10 tons, operated in the vibrating mode, to compact the rubblized pavement.

734.02.1.2.2 Pneumatic-Tired Roller: Use a pneumatic-tired roller as specified in 503.16.3 to compact the rubblized pavement.

734.02.2 Method 2 (Multihead Breaker Process):

734.02.2.1 Multihead Breaker Machine: Use a multihead breaker that is a rubber-tired, self-propelled unit, which uses 12 to 16 hammers with weights ranging from 1,200 to 2,000 pounds mounted

laterally in pairs with half the hammers in a forward row and the remainder diagonally offset in a rear row so that there is continuous breakage from side to side. Each hammer shall have one continuous strike bar whose width varies from 1 to 2 inches. Each pair of hammers is attached to a hydraulic lift cylinder, which operates as an independent unit, and cycles at a rate of 30 to 35 impacts per minute. It shall be capable of rubblizing up to 13 feet in width of pavement in one pass.

734.02.2.2 Multihead Breaker Seating Equipment:

734.02.2.2.1 Z-Grid Roller:

Use a modified vibratory steel-wheel roller with a "Z" grid pattern on the drum face. The roller shall have a gross weight of at least 10 tons, and operate in the vibratory mode, to settle and seat the rubblized pavement.

734.02.2.2.2 Steel-Wheel Vibratory Roller: Use a steel-wheel vibratory roller having a gross weight of not less than 10 tons, operated in the vibrating mode, to compact the rubblized pavement.

734.02.2.2.3 Pneumatic-Tired Roller: Use a pneumatic-tired roller as specified in 503.16.3 to compact the rubblized pavement.

734.03 CONSTRUCTION REQUIREMENTS.

734.03.1 Preparation Prior to Rubblization:

734.03.1.1 Drainage System Installation: Prior to rubblization operations, install drainage systems as shown on the plans. Ensure that drainage systems are properly functioning for a minimum of two weeks prior to rubblization.

734.03.1.2 Removal of Existing Asphalt Surfaces: Remove existing asphalt concrete overlays and patches from the PCC pavement surfaces prior to rubblization. Existing full-depth asphalt patches shall remain in place, unless directed for removal and replacement by the engineer.

734.03.1.3 Saw-Cut Joints: Make new full-depth saw-cuts along existing joints on all pavement edges where rubblized PCC is adjacent to pavement that will remain in place. Sever all load transfer devices between the planned rubblization and PCC pavement remaining in place.

734.03.1.4 Shouldering: Complete shoulder adjustments and/or any pavement widening up to the elevation of the existing pavement grade prior to beginning the rubblization operations. These areas can be used to support the rubblization machines while the existing PCC pavement is being rubblized.

734.03.2 Test Strip and Test Pit to Establish Procedure:

734.03.2.1 Test Strip: Before the rubblization process begins, the engineer will designate a test section of at least 150 feet by 12 feet. Rubblize the test section using varying degrees of energy and/or various striking heights until a procedure is established that will rubblize the pavement as outlined herein.

On projects that have a transition to a bridge or to an overpass, make the test pit in the transition where the material will be totally removed.

734.03.2.2 Test Pit: In the middle of the test strip, excavate a 4-foot square test pit at a location selected by the engineer, to determine that the breaker is producing rubblized pieces of the specified sizes as outlined in these specifications. Check the rubblized particle sizes throughout the entire depth of the pavement. Remove the test pit material from the project and fill the hole using coarse aggregate material as specified in 1003.03. Place and properly compact the replacement material to the satisfaction of the engineer.

The engineer and the contractor shall mutually agree upon the rubblization procedure based on the performance criteria contained herein. Use the established procedure to rubblize the remainder of the pavement. Continuously monitor the rubblization operation, and make minor adjustments in the striking pattern, striking energy, number of passes, and other factors necessary to continually achieve acceptable rubblization throughout the project. Inform the engineer of any major adjustments that may be required in the process to provide rubblized pavement that conforms to the specification requirements. Additional test pits may be required by the engineer to confirm that the PCC pavement is adequately rubblized.

734.03.3 Rubblization Criteria:

734.03.3.1 Method 1 (Resonant Frequency Breaker): Compact the complete width of the rubblized pavement surface with the vibratory steel-wheel roller and pneumatic-tired roller in the following sequence as a minimum. The engineer will determine if more passes are necessary.

1. One pass with the vibratory steel-wheel roller in vibratory mode.
2. One pass with the pneumatic-tired roller.
3. Two passes with the vibratory steel-wheel roller in vibratory mode.

A pass shall be defined as forward and backward in the same path. Operate the roller at a speed not to exceed 4.5 feet per second.

Break the existing concrete pavement into pieces ranging from sand size to 6 inches, with no more than approximately 10 percent of the material larger than 6 inches and no individual pieces larger than 8 inches in any

dimension. The majority of rubblized concrete material shall be pieces ranging from1 to 3 inches in size in any dimension.

734.03.3.2 Method 2 (Multihead Breaker): Compact the complete width of the rubblized pavement surface with the vibratory Z-grid roller, vibratory steel-wheel roller, and pneumatic-tired roller in the following sequence as a minimum. The engineer will determine if more passes are necessary.

1. Four passes with the Z-grid roller in vibratory mode (minimum).
2. Four passes with the vibratory steel-wheel roller in vibratory mode.
3. Two passes with the pneumatic-tired roller.
4. Two passes with the vibratory steel-wheel roller in vibratory mode immediately prior to asphaltic concrete overlay,

A pass shall be defined as forward and backward in the same path. Operate the roller at a two speed not to exceed 4.5 feet per second.

Break the existing concrete pavement into particles with at least 75 percent (as determined by visual observation) of the particles being less than 3 inches and no pieces larger than 6 inches in any dimension within the upper half of the slab thickness. The bottom half of the slab shall have rubblized pavement with no pieces larger than 9 inches in any dimension.

734.03.4 Reinforced Portland Cement Concrete Pavement: Debond the reinforcing steel from the concrete and leave in place. If any steel is protruding from the surface, cut the steel below the surface and remove.

734.03.5 General Rubblization Procedures: Rubblize in partial widths when necessary to maintain traffic as shown in the contract documents. When the rubblization process is adjacent to in-service pavement, take measures to prevent debris from entering the in-service pavement. In areas where the pavement is to be overlayed prior to completion of the rubblization, extend the initial rubblization a minimum of 6 inches beyond the width of the pavement to be overlayed. For the resonant frequency breaker process, begin rubblizing at a free edge or previously broken edge and progress toward the opposite shoulder or longitudinal centerline of the pavement. Continuous coverage of the entire pavement surface, overlapped if necessary to achieve adequate rubblization with the breaking shoe, will be required.

Additional passes of either rubblization device may be required to meet the particle sizes outlined in this specification as directed by the engineer.

734.03.6 Dust Control: Minimize the dispersion of dust from the rubblization operation until the rubblized surface is overlayed with asphalt concrete. Provide a water truck, operator, and all water necessary for dust-

control purposes. Do not apply excessive water to the rubblized surface. Dust control is incidental to the rubblization process and will not be paid for separately. Dust-mitigation measures must be acceptable to the engineer.

734.03.7 Damage to Base, Underlying Structures, and Other Facilities: Operate the rubblization machine and rollers in a manner that will avoid damaging the base, underlying structures, utilities, drainage facilities, bridge approach slabs, bridge decks, and other facilities on the project. If any damage occurs, immediately cease operations, notify the engineer, and repair the damage as directed. Make repairs in a timely manner at the contractor's expense.

734.03.8 Unstable Area Patching: If unstable areas occur because of expansion of the existing concrete pavement, remove the unstable areas to a maximum length of 4 feet by 12 feet in width and replace with full-depth asphalt concrete patching in accordance with Section 510 as directed. Patching procedures shall conform to the standard specifications, and shall be completed prior to placing the asphalt concrete overlay.

Patch areas of poor subgrade support that are identified during the rubblization and seating process as directed. Remove the rubblized pavement, base course, and subgrade material from unstable areas. Replace the material with full depth asphalt concrete patches in accordance with Section 510 as directed.

734.03.9 Progress of the Work: Unless otherwise specified, no more than 48 hours shall elapse between rubblizing the pavement and the placement of the asphalt concrete overlay. A minimum of 4 inches of asphalt concrete is required before traffic is allowed on the on the rubblized pavement. If rain occurs between these operations, this time limitation may be waived to allow sufficient time for the rubblized pavement to dry to the satisfaction of the engineer.

Except at restricted crossover and ramp crossings, do not allow traffic on the rubblized pavement before the initial asphalt concrete base and leveling courses, if required, are in place. Immediately remove rubblized material dislodged by construction traffic from the roadway in front of the paver.

734.04 MEASUREMENT. Rubblizing portland cement concrete pavement will be measured by the square yard. The width will be the nominal width of the existing pavement, and the length will be measured along the centerline of each roadway or ramp.

734.05 PAYMENT. Payment for rubblizing portland cement concrete pavement will be made at the contract unit price per square yard, which includes furnishing all materials, labor, equipment, and incidentals necessary to complete the work.

Payment will be made under:

Item No.	Pay Item	Pay Unit
734-01	Rubblizing Portland Cement Concrete Pavement (Resonant Frequency Breaker)	Square Yard
734-02	Rubblizing Portland Cement Concrete Pavement (Multihead Breaker)	Square Yard

Section 735
Mailboxes and Mailbox Supports

735.01 DESCRIPTION. Remove and replace mailboxes, newspaper delivery tubes, and mailbox supports in accordance with these specifications, the plans, and as directed.

Mailboxes are privately owned, although placed on public right-of-way. Coordinate with the mailbox owner and the United States Postal Service (USPS) to ensure that the owner receives mail deliveries.

Using a form furnished by the Department a minimum of 10 calendar days before renewal, notify the property owners that the mailbox and supports will be removed for construction and will be replaced using approved materials in accordance with these specifications. Also notify the property owners that salvageable material will be placed on the owner's property for the owner's disposal if the owner so desires. Provide the engineer with documentation assuring that all property owners have been notified in accordance with these specifications.

735.02 MATERIALS. Fabricate mailboxes with light sheet metal or plastic complying with the requirements of the USPS. Provide the same size replacement mailbox as the existing mailbox. Newspaper tubes shall be furnished by the property owner. Names and numbers on mailboxes will be the responsibility of the property owner.

Provide galvanized metal posts for mailbox supports with a strength no greater than a 2-inch diameter standard-strength steel pipe or 2 pound per foot flanged channels. Include an anti-twist device for the mailbox supports.

735.03 CONSTRUCTION REQUIREMENTS. Install mailbox supports a maximum of 24 inches in the ground. Do not set supports in concrete.

Provide support-to-box attachments sufficient to prevent the box from separating from the support if the support is struck by an automobile or light truck. Mount newspaper tubes below the mailbox on the side of the mailbox support.

Dispose of materials in accordance with 202.02 at no direct pay.

Sampling and testing of materials will not be required.

735.04 MEASUREMENT. Mailboxes will be measured per each and will include furnishing new mailboxes. Mailbox supports will be measured per each and will include all materials, bolts, nuts, washers, and other components, equipment, and labor necessary to remove and replace mailbox supports, install mailboxes, and install newspaper delivery tubes.

735.05 PAYMENT.

Payment will be made at the contract unit price per each.

Payment will be made under:

Item No.	Pay Item	Pay Unit
735-01	Mailboxes	Each
735-02	Mailbox Supports (Single)	Each
735-03	Mailbox Supports (Double)	Each
735-04	Mailbox Supports (Multiple)	Each

Section 736
Traffic Signals

736.01 DESCRIPTION. Furnish and install necessary materials and equipment to complete new traffic signal systems or modify existing systems in accordance with plan details, Traffic Signal Standard Details, and these specifications.

Unless otherwise specified, furnish only new materials. When existing systems are to be modified, incorporate the existing material into the revised system, salvage the material, or abandon it, as specified.

Furnish and install incidental parts, which are necessary to complete the traffic signal or other electrical systems or required for modifying existing systems, even though not shown on the plans, specified herein, or in the project specifications. All systems shall be complete and in operation to the satisfaction of the engineer at the time of final acceptance.

736.02 MATERIALS. Materials shall comply with the following sections and subsections:

Usable Soil	203.06.1
Electrical Service	822.10
Portland Cement Concrete, Class S	901
Reinforcing Steel	1009.01
Ground Rods	1010.08
Manhole Frames and Covers	1013.05
Treated Timber Poles	1014
Precast Reinforced Concrete Junction Boxes and Manholes	1016.06
Rigid Metal Electrical Conduit	1018.11
Electrical Conductors	1018.11
Traffic Signal Heads	1020.01
Traffic Detectors and Associated Equipment	1020.02
Traffic Signal Hardware and Equipment	1020.03
Pedestal Anchor Bolts	1020.03.3
Support Cable	1020.03.4
Guy Components	1020.03.5
Traffic Signal Conductors	1020.03.6
Electrical Junction Boxes	1020.03.7
Poles for Traffic Signal Systems	1020.04
Steel Standards and Mast Arms	1020.04.3

Traffic Operations Approved Product List:
http://wwwsp.dotd.la.gov/Inside_LaDOTD/Divisions/Operations/Traffic_Services/Pages/Traffic_Operations_Approved_Products_List.aspx

(Materials referenced to the Traffic Operations Approved Product List under Sections 736 and 1020 will require the materials to be included on the list before use.)

Controllers shall comply with the supplemental specifications titled *Traffic Signal Control System, Traffic Control Standards.*

Traffic detectors and associated equipment shall be included in the *Traffic Signal Control System, Traffic Control Standards*, unless otherwise noted on the plans.

736.03 REGULATIONS AND CODE. Electrical equipment shall comply with the latest standards of the NEMA or the RMA, whichever applies. In addition to the requirements of these specifications, the plans, and the project specifications, material and work shall comply with the latest requirements of NFPA No. 70 National Electrical Code and ANSI C2 National Electrical Safety Code, the Standards of ASTM, ANSI, MUTCD, ITE, and IMSA. When there is a discrepancy, IMSA will override the NEC. The term code as referred to in this section shall be the NFPA No. 70, National Electrical Code, and ANSI C2, National Electrical Safety Code. Discrepancies between codes or standards and these specifications shall be resolved in accordance with 105.04.

Contractors shall have a IMSA Traffic Signal Level 1 certified technician at all times at each work location and a IMSA Traffic Signal Level 2 certified technician to work in the cabinet for all signal work.

736.04 GENERAL REQUIREMENTS. All traffic signal projects shall follow the Traffic Signal Special Details.

Verify the location of existing utilities prior to construction. Verify the practicality of the location, elevation, and orientation of foundations for poles and pedestals prior to ordering materials.

Protect traffic control equipment to be salvaged during removal and delivery to the specified location. Equipment not to be salvaged shall become the property of the contractor. Dispose of unsalvageable equipment in accordance with 202.02.

Use the existing equipment or provide traffic signal equipment during the period of construction for continuous operation of the signal system at no

direct pay. Traffic control operations and construction shall be in accordance with the plans or these specifications. Submit operational differences in writing and obtain approval in advance by the Traffic Engineer.

Provide minimum clearances for traffic signal poles and apparatus in accordance with the MUTCD. Locate poles a minimum of 24 inches outside the barrier curb or a minimum of 10 feet outside the edge of the travel lane. Any deviation must be approved by the engineer.

736.05 DRAWINGS AND EQUIPMENT SUBMITTALS. Provide drawings and equipment submittals to the State Traffic Signal Engineer at Traffic Services, 7686 Tom Drive, Baton Rouge, LA 70806, before beginning work.

736.05.1 Required Documents: Electronically submit a PDF formatted letter on company letterhead for equipment submittals and shop drawings. Show the state project number or permit number, project location, project limits, pay item description, pay item number, manufacturer's name, and model numbers of the proposed equipment on each sheet. Ensure that the proposed equipment meets all contract requirements.

Submit shop drawings for mast arm poles and assemblies, including combination mast arm.

Equipment submittal shall include material catalog cuts. If multiple items are shown on material cut sheet, highlight the items submitted with the corresponding pay item number.

Submittals for equipment and materials shall be complete. Partial or incomplete submittals will be returned without review.

Where certifications and/or warranties are specified, the information submitted for acceptance shall include certifications and warranties. Certifications involving inspections and/or tests of material shall be complete with all test data, dates, and times.

After the engineer reviews the submittals for conformance with the design concept of the project, the engineer will stamp the drawings indicating their status as 'Accepted,' 'Accepted-As-Noted,' 'Rejected,' or 'Information Only.' Since the engineer reviews for conformance with the design concept only, it is the contractor's responsibility to coordinate the various items into a working system as specified. The contractor shall not be relieved from responsibility for errors or omissions in the shop, working, layout drawings, or other documents by the Department's acceptance thereof. The contractor must still be in full compliance with contract and specification requirements.

All submitted items reviewed and marked 'Rejected' are to be resubmitted in their entirety, unless otherwise indicated within the submittal comments, with a disposition of previous comments to verify contract compliance at no cost to the Department.

736.05.2 Exceptions, Deviations, and Substitutions: In general, exceptions to and deviations from the requirements of the contract documents will not be allowed. It is the contractor's responsibility to note any deviations from contract requirements at the time of submittal and to make any requests for deviations in writing to the engineer. In general, substitutions will not be acceptable. Requests for substitutions must demonstrate that the proposed substitution is superior to the material or equipment required by the contract documents and will be at no additional cost to the Department. No exceptions, deviations, or substitutions will be permitted without the approval of the engineer.

736.06 MAINTENANCE AND RESPONSIBILITY. Adhere to 107.19. Provide to the engineer a punch list of any equipment not working before beginning work. Once work begins on any portion of the signals on the project, those signals shall be the full responsibility of the contractor until final acceptance. Final repairs or replacement of damaged equipment must meet the approval of the engineer prior to or at the time of final inspection; otherwise, the traffic signal installation will not be accepted.

Provide the engineer a 24-hour emergency contact name and telephone number.

The existing and/or temporary traffic signals shall remain in operation during all construction stages, except for the most essential down time as determined by the project engineer. Provide police supervision of traffic at any time the traffic signal system is not in operation at no cost to the Department.

Any inquiry, complaint, or request by the Department shall be investigated and repairs begun within two hours of notification. Failure to respond satisfactorily will result in the Department making the necessary repairs. The contractor shall be responsible for all costs plus 15 percent.

The damages will be deducted from the cost of the contract.

Any proposed activity in the vicinity of a highway-rail grade crossing must adhere to the guidelines set forth in the current edition of the *Manual on Uniform Traffic Control Devices (MUTCD)* and the Railway-Highway Provisions in 107.08. Work in temporary traffic control zones in the vicinity of highway-rail grade crossings which states that lane restrictions, flagging, or other operations shall not create conditions where vehicles can be queued

across the railroad tracks. If the queuing of vehicles across the tracks cannot be avoided, a uniformed law enforcement officer or flagger shall be provided at the crossing to prevent vehicles from stopping on the tracks, even if automatic warning devices are in place.

736.07 SIGNAL INSPECTION. Call DOTD Traffic Operations Section at (225) 935-0100 at least 7 days before beginning construction activities, signal turn on, and final inspection to schedule an inspector to be present.

The signal inspector will inspect projects throughout the construction period, keep a diary of interim punch lists, and provide copies to the Project Engineer and District Traffic Operations Engineer (DTOE).

It is the intent to have all electrical work completed and equipment field tested prior to signal "turn-on." If the Signal Inspector determines work is not complete and the remediation will require more than two hours to complete, the turn-on may be canceled and the contractor will be required to reschedule at another date.

Provide all of the following to the Traffic Signal Inspector at traffic signal turn-on:

1. One set of signal plans of record with field revisions marked in red ink;
2. One copy of the operation and service manuals for the signal controller and associated control equipment;
3. Five copies 11 inches x 17 inches of the cabinet wiring diagrams including field terminal connection diagrams; and,

736.07.1 Operations and Maintenance (O & M) Manual: The O&M Manual shall include, but not be limited to, the following data (where applicable):

1. Cover sheet with the project name, project number, route, parish, contractor name;
2. Table of contents;
3. Operational plan;
4. Contractor warranty letter, guarantees, and any other special warranties/guarantees as applicable;
5. Copy of executed Certificate of Substantial Completion (if applicable);
6. DOTD Final Acceptance letter;
7. Approved Shop Drawings/Submittals;
8. Fabrication Drawings;
9. Specific System and Equipment O&M Data;
10. Maintenance Requirements and Schedules;

11. Test Recordings;
12. Certifications;
13. Additional Wiring Schematics; and,
14. Certified As-Built Drawings.

Produce and submit two 90 percent draft manuals to the State Traffic Signal Engineer, 30 days before signal turn-on. The format and draft manual must be approved prior to final submission of the remaining manuals. The State Traffic Signal Engineer will return one marked-up review copy of the draft manual to the contractor for corrections. The contractor shall make the corrections and return one corrected copy to the State Traffic Signal Engineer. After receiving approval of the draft manuals from the State Traffic Signal Engineer, the contractor shall prepare the final PDF.

Submit final approved manuals upon Final Acceptance of the project. Final submission shall be a PDF formatted manual on a USB memory stick.

The cover shall include a title identifying each volume with project name, project number, and identity of subject matter enclosed. Include a table of contents and dividers for each section and bind-in drawings. Scan drawings to 11 inches x 17 inches.

736.07.2 Burn In: A 60-day "burn-in" period is required after the signal turn on prior to final acceptance. A signal acceptance document will be issued and provided to the project engineer by the State Traffic Signal Engineer at the completion of the "burn-in" period, barring any problems with signal function.

736.08 ELECTRICAL SERVICE. Verify the location of the power source and arrange for electrical service in accordance with 822.10. Use existing power service unless a new power source is indicated on the plans. Include the traffic signal control equipment in the same quadrant as the power source. If the power source is not in the same quadrant, submit a detailed drawing of proposed changes for approval.

At each power source, attach a 1-inch diameter conduit with conductors to the service pole and terminate with a threaded service entrance fitting (weather head) at a height designated by the power company. Extend the wires a minimum of 24 inches beyond the weather head.

736.09 FOUNDATIONS. Concrete shall be Class S in accordance with Section 901. Install in accordance with the Traffic Signal Standard Details. Drill holes for mast arm and strain pole foundations with an auger. Excavation for pedestal poles and controller foundations may be made with approved equipment or by hand. If a cave-in occurs during excavation,

install a casing or sleeving before continuing. Repair cave-ins before placing the foundation. When encountering subsurface obstructions, remove the obstructions or replace the excavated material and relocate the foundation as directed, at no cost to the Department. Thoroughly moisten forms and ground which will be in contact with concrete before placing concrete.

Cast foundations monolithically. Form the exposed portions to present a neat appearance. Rest the bottom and sides of concrete foundations on firm undisturbed ground. Place pole foundations with the bored hole as the form. Do not backfill around a cast-in-place foundation.

Finish tops of foundations for signal poles, except special foundations, at grade of curb top or sidewalk or as directed. Place conduit ends and anchor bolts in correct position and hold in place by a template.

Finish exposed surfaces of concrete with a Class 1, Ordinary Surface Finish in accordance with 805.08.1. Finish the sidewalk section in accordance with Section 706 except when the edge of a concrete foundation is within 18 inches of a sidewalk.

Level the tops of mast arm foundations so the pole base will be in full contact and the pole will be vertical. Shims may be allowed at the discretion of the engineer. Extend anchor bolts a minimum of 1/4 inch above the nut.

Extend conduits which terminate in anchor base type poles and pedestals approximately 3 inches above the foundation and align toward the hand-hole opening.

Install an additional 3 inch diameter spare conduit from the foundation to the nearest junction box for future use.

736.10 PEDESTAL POLES. Install the pedestal poles plumb within 1 inch at the top. Remove pedestal poles not constructed within the 1 inch tolerance and reconstruct the foundation at no cost to the Department. Shims will be allowed at the discretion of the engineer. When an existing pedestal pole cannot be shimmed within tolerance through no fault of the contractor, replace the existing foundation in accordance with 109.04.

736.11 MAST ARMS. After installation and loading, plumb the mast arm shaft within 1 inch at the top. The end of the mast arm shall be a minimum of 5 feet above the top of the shaft. The end of the mast arm shall be a minimum of 21 feet above the bottom of the transformer base. Install the mast arms with compression grommet bushing (CGB) connectors in bosses utilized for cabling.

736.12 STRAIN POLES. Furnish anchor base type strain poles for the attachment of support cables. Attach the support cable in accordance with 736.15. Poles shall be plumb within 6 inches at the top after support cable tensioning in accordance with the plans.

736.13 TIMBER POLES. Set poles in holes drilled by an auger to a minimum depth of 6 feet. Auger diameter shall be approximately 4 inches greater than the pole butt diameter. Embed the poles in the ground a minimum of 20 percent of the pole length. Ensure the poles are plumb within 6 inches at the top after support cable tensioning in accordance with the plans. Provide and compact backfill material as directed.

Fit holes for the attachment of support cables with 5/8-inch diameter thimble-eye through-bolts and $2^1/_2$-inch square curved washers.

Provide each pole with a continuous length of No. 6 AWG copper wire along the length of the pole. Coil a minimum of 6 feet of the copper wire and attach to the bottom of the pole forming a coil ground. Extend the copper wire a minimum of 6 inches above the top of the pole. Staple the wire with galvanized $1^1/_2$-inch staples at approximately 6-inch intervals beginning at the butt, then at approximately 12-inch intervals beginning at 12 feet from the butt and continuing to the top of the pole.

Install anchors on new poles in accordance with the plans.

736.14 GUY-WIRE ASSEMBLIES. Attach guy wire to the pole with a 5/8-inch diameter angle thimble-eye bolt of appropriate length through a lift plate fastened to the pole by two 3/8-inch diameter lag screws. The opposite side of the pole shall have a $2^1/_2$-inch square curved washer, a square nut, and a thimble-eye nut for termination of support cable. Use an additional square nut as a locking nut against the thimble-eye nut.

Tighten hardware against the pole. Saw excess bolt length to within 1/4 inch of the nut and repair the galvanized coating in accordance with 811.08.

Provide the guy assembly with strain insulator, thimble eye anchor rod, service sleeves, and screw-type anchors as shown on the plans. Develop holding strength and properly align the installed anchors to provide permanent stability to the installation.

Install guy assemblies and tension before erection of signals so that they will resist the major portion of the horizontal loading.

736.15 SUPPORT CABLE. Install support cable with accessories between two or more poles to provide support and attachment for traffic

control equipment. Ground all support cables. Accessories used with support cables shall include three-bolt clamps and service sleeves. Use long strain insulators as needed for safety clearance, which must be approved by the engineer when not shown on the plans. Attach the support cable with standard thimble-type hardware.

736.16 VEHICLE AND PEDESTRIAN SIGNAL HEADS. Install signals vertically unless otherwise specified. Fit cable suspended heads with a universal hanger. Use drop pipes only when necessary to provide proper roadway clearance. Provide disconnect hangers for cable suspended heads.

Install mast arm mounted signals using an approved adjustable rigid bracket.

All signal heads on mast arms shall have a backplate conforming to 1020.01.6.

Each LED traffic signal lamp module in the signal head shall be connected to an individual wire from the controller.

Orient each signal head to its lane or crosswalk and secure in-place by a serrated or other locking device incorporated in signal housing and support hardware. Use supporting brackets on the top and bottom of the section assembly to rigidly support all faces. Close openings not used for mounting purposes with approved threaded weatherproof plugs.

Provide a minimum of 8 feet between signal heads, measured between imaginary lines centered on each signal head parallel to the approach. Aim the signal head within 3 degrees of parallel to the approach lane to which it applies, or as directed.

Cover vehicular signal heads with a sturdy opaque material until placed in service.

Provide a 12-inch light emitting diode (LED) traffic signal lamp unit as part of a new traffic signal head or as a retrofitted replacement into a new or existing signal housing.

If proper orientation of the LED traffic signal lamp unit is required for optimum performance, prominently and permanently display clear directional marking(s), such as an “UP arrow,” for correct indexing and orientation on the unit.

Provide each LED traffic signal lamp unit with a complete and accurate installation wiring guide and the name, address, and telephone number for the representative, manufacturer, or distributor for warranty replacement.

736.17 VEHICLE LOOP DETECTOR INSTALLATION.

Saw slots in the pavement for installation of vehicle detector loop wire in the configuration, dimensions, and combinations shown on the plans. Cut an extension from the loop to the pavement edge to permit wire routing to an adjacent pullbox through a 1/2-inch conduit.

Clean slots of loose material. The engineer will examine and approve the depth of each loop slot for conformance with the plans before the contractor places the loop wires in the slot. Carefully place wires in the slot. The number of turns of wire installed for each loop shall be as required on the plans. Carefully push the wire into the slots with a blunt tool to avoid damaging the insulation. No splices will be permitted in the loop installation except in the pull-box, conduit fittings, or pole. Install wires from the pavement to the controller box inside a conduit as shown on the plans. Uniformly twist wire installed from the pavement edge to the splice at 2 to 5 turns per foot. Splice the loop ends to a lead-in cable. Connect the lead-in cable inside the controller cabinet. Splice the wires inside the junction box using an approved connector, then encapsulate with an approved electrical insulating waterproof epoxy as shown on the plans.

Completely fill the slots to within 1/8 inch of the pavement surface with an approved sealant in accordance with Table 1020-1.

736.18 VIDEO DETECTORS. Follow the manufacturer's installation instructions. Place the video detectors and video detection zones as shown on the plans. At the contractor's expense, the equipment manufacturer shall provide factory direct technical support to supervise and provide onsite assistance for the installation and testing of the video detectors for signal turn-ons. The contractor shall provide compatible computer equipment to set-up detection zones, if required, and shall repair any malfunction within 24 hours of notification by DOTD.

Placement of detection zones shall be by means of a graphical interface using the video image of the roadway. The monitor shall show images of the detection zones superimposed on the video image of traffic while the VDS processor is running.

Use the mouse or handheld programming device to draw detection zones on the monitor. The detection zones shall be capable of being sized, shaped and overlapped to provide optimal road coverage and detection. Save the detector configurations on disk to download detector configurations to the VDS processor unit and to retrieve the detector configuration that is currently running in the VDS processor unit.

Use the mouse or handheld programming device to edit previously defined detector configurations so as to fine-tune the detection zone

placement size and shape. Once a detection configuration has been created, the system shall provide a graphic display of the new configuration on its monitor. While this fine-tuning is being done, continue operating the detection from the current detector configuration.

When a vehicle occupies a detection zone, the detection zone on the live video shall indicate the presence of the vehicle, thereby verifying proper operation of the detection system. With the absence of a video monitor, the card shall have an LED that will indicate proper operation of the detection zones.

Provide detection zones that are sensitive to the direction of vehicle travel. The direction to be detected by each detection zone shall be user programmable. Each detection zone shall be labeled with the corresponding movement and phasing information.

Program video cameras with IP addresses assigned by the Department.

736.19 LED PEDESTRIAN SIGNAL HEAD AND PUSHBUTTON. Mount LED pedestrian signal and LED pedestrian countdown modules with the bottom of the signal housing, including brackets, no less than 7 feet or more than 10 feet above sidewalk level. Position and adjust each LED pedestrian countdown module to provide maximum visibility at the beginning of the controlled crosswalk.

Place pedestrian push buttons either on signal pedestals, or on side of mast arms, strain poles, and wood poles, or around whichever is applicable, at a minimum height of 42 inches from the top of sidewalk. The pedestrian push button shall be located adjacent to a level, all-weather surface to provide access from a wheelchair according to the requirements of the Americans with Disabilities Act (ADA).

Service push-buttons mounted on steel poles by wiring inside the poles. Install wires through a hole in the pole and through the back of housing through a rubber grommet. Plug unused conduit attachment holes. Attach the housing to the pole using stainless steel bolts or screws.

Install pedestrian pushbutton signs above the pushbutton.

736.20 ELECTRICAL. Neatly lace wires in cabinets into cables with nylon lacing or plastic straps.

Install conductors in conduit except where the run is inside poles or suspended from support cable.

After completion of field wiring, seal the conduit entering cabinets with a removable sealing material compatible with the cable jacket, insulation, and conduit material.

Mechanically and electrically secure and ground cabinet, support cable, metallic cable sheaths, transformer cases, metal poles, and pedestals. Bonding and grounding jumpers shall be No. 6 AWG solid copper wire. Ground all equipment on wood poles.

Cable from the circuit breaker at the service to the controller shall consist of a minimum of three No. 6 AWG THWN stranded copper wires.

Install 6 feet of spare signal, loop lead-in, and communication cable in each base-mounted cabinet. Connect field wiring to terminals by one piece, screw-tightened lugs.

Provide aerial signal cable with a drip loop extending at least 6 inches below the entrance. Do not allow the aerial signal cable and drip loop to chafe on the equipment.

Install signal cable between signal heads and controller cabinets. When specified, install interconnect and/or communication cable between controller cabinets of different intersections. Lash signal, interconnect, and/or communication cable to support cable or install in underground conduit as shown on the plans. Use stainless steel lashing material for interconnect and aluminum lashing material for signal cable.

736.21 CONDUIT INSTALLATION. Enclose underground wiring in flexible conduit.

Enclose all above ground wiring in rigid conduit. Cut threads clean, straight, and true, and of sufficient length to permit full-depth coupling. Excessive threads will not be permitted. Thread, ream, and cap ends of conduit installed for future connections. Tighten couplings until the conduit ends are together. Repair damaged coatings in exposed threads in accordance with 811.08.1. Terminate exposed threaded ends of conduit with an insulated-throat, ground-type bushing.

Backfill with select soils conforming to 701.08.1, place, and compact to at least the density of the surrounding ground at no cost to the Department. After installation, test conduits for clearance with a 2 inches long mandrel having a diameter 1/4-inch smaller than the inside diameter of the conduit if directed by the engineer. Conduits not allowing passage of the mandrel will be rejected.

The contractor may install a larger size conduit at no cost to the Department. No reducing couplings will be permitted in a conduit run.

Bury underground conduits a minimum of 24 inches below the surface. Install conduits for loop detectors parallel to existing or proposed curbs and a maximum of 24 inches behind the back of curb, or as directed. Jack or

bore conduit under existing pavements and within the drip line of trees in accordance with Section 728.

736.22 CONTROL EQUIPMENT. Neatly arrange field wiring in controller cabinets and bases, lash into cables, route to the appropriate terminal blocks and permanently identify near the terminal.

Label all signal, pedestrian, loop, and video detectors with a waterproof labeling tape showing approach, direction, and phase assignment.

Provide controller equipment programming. When the information supplied by the Department is insufficient for functional operation of the installed equipment, notify the engineer in writing of the problem identifying discrepancies and proposing specific remedies or corrections. After programming, test the controller equipment operations with the signals off, using the signal shutdown switch.

736.23 JUNCTION BOXES. The maximum distance for traffic junction boxes is 500 feet fand 1000 feet for communication junction boxes. Backfill trench with selected soils conforming to 701.08.1, place, and compact to the density of the surrounding ground at no cost to the Department.

Install electrical conductors clear of the top of the junction box.

736.24 LED BLANK OUT SIGN. Follow the manufacturer's installation instructions and the plans for placement location.

736.25 CABINET/CONTROLLER TESTING. When design tests are specified herein, additional tests will not be required if documentation is provided indicating that such tests have been previously completed. Equipment shall be subject to factory demonstration tests and design approval tests at a location agreed upon by the contractor and the Department. The Department reserves the right to have its representative witness all factory demonstration tests and design approval tests.

Performance tests may be required on equipment not previously tested or approved. The Department will not be responsible for time lost or delays caused by sampling and testing prior to final approval of any item.

Conduct special tests when equipment or systems are suspected of improper operation, or when additional data is necessary to determine proper operation or conformance with specifications.

Perform a test on the completely assembled equipment, cabinet, and control equipment by the manufacturer prior to shipment. Correct malfunctions or defects and retest the equipment. The complete log,

beginning with the first test and showing the results of the test, shall be delivered with the equipment. The test shall require the operation of the equipment with each signal circuit connected to an incandescent load of a minimum of 600 watts. The equipment shall operate sequentially and continuously for a minimum of 48 hours as stated above in an environment having a minimum temperature of 140°F.

736.26 TEMPORARY TRAFFIC SIGNAL INSTALLATION. Furnish, install, maintain, and remove a temporary traffic signal installation as shown on the plans, including but not limited to controllers, temporary signal heads, interconnect, vehicle detectors, and signing. Temporary signal equipment may be used equipment in good working condition.

736.26.1 Controllers: Only controllers meeting the Department's latest controller specification will be approved for use at temporary signal locations.

All control equipment for the temporary traffic signal(s) shall be furnished by the contractor unless otherwise stated on the plans.

A prefabricated cabinet foundation may be allowed with prior approval.

736.26.2 Traffic Signal Heads: All traffic signal sections shall contain 12 inches LED lamp modules. Place the temporary traffic signal heads as indicated on the temporary traffic signal plan or as directed by the engineer. Furnish enough extra cable length to relocate heads to any position on the span wire or at locations illustrated on the plans for construction staging. The temporary traffic signal shall remain in operation during all signal head relocations.

736.26.3 Interconnect: Provide temporary traffic signal interconnect if specified on the plans. The contractor may request, in writing, to substitute a wired interconnect indicated in the contract documents with a secured wireless interconnect at no cost to the Department. Provide a radio device that will operate properly at all times and during all construction staging. If approved for use by the engineer, submit marked-up traffic signal plans indicating locations of radios and antennas and installation details. If using a wireless interconnect that proves unviable in the opinion of the engineer, or if the interconnect fails during testing or operations, the contractor shall be responsible for installing all necessary poles, wired interconnect, and other infrastructure for providing temporary interconnect at no cost to the Department.

The existing system interconnects and phone lines are to be maintained as part of the Temporary Traffic Signal Installation specified for on the plans. Install interconnects into the temporary controller cabinet according to the

notes or details on the plans. All labor and equipment required to install and maintain the existing interconnect as part of the Temporary Traffic Signal Installation shall be included in the item Temporary Traffic Signal Installation. When shown in the plans, temporary traffic signal interconnect equipment shall be furnished and installed. The temporary traffic signal interconnect shall maintain interconnect communications throughout the entire signal system for the duration of the project.

736.26.4 Vehicle Detection: All temporary traffic signal installations shall have vehicular detection installed as shown on the plans or as directed by the engineer.

736.26.5 Signs: Remove all existing street name and intersection regulatory signs from existing poles and relocate to the temporary signal span wire. If new mast arm assembly, poles, and posts are specified for the permanent signals, relocate the signs to the new equipment at no cost to the Department.

736.26.6 Energy Charges: The electrical utility energy charges for the operation of the temporary traffic signal installation shall be paid by the contractor.

736.27 MEASUREMENT.

736.27.1 Trenching and Backfilling: Trenching and backfilling will be measured by the linear foot of excavated trench backfilled and accepted. The conduit will be paid under a separate pay item. Repair trenching through asphalt pavement in accordance with Section 510 and through portland cement concrete pavement as directed at no cost to the Department.

736.27.2 Jacking or Boring: A jack or bore will be measured by the linear foot. Measurement will include the jacking or boring of conduit. The conduit will be paid under a separate pay item.

736.27.3 Signal Pole (Mast Arm, Strain, and Pedestal): Signal poles will be measured per each installed and accepted. Measurement will include the pole, mast arm, base assembly, and anchor bolts.

736.27.4 Pole Foundation: Pole foundation will be measured per each and will include concrete foundation, reinforcing steel, conduits in foundation, ground rod, ground wires, ground clamp, hardware, drilled excavation, backfill, grout, electrical oxide-inhibiting compound, and disposal of excess excavated material.

736.27.5 Signal Heads: Signal heads will be measured per each head installed and/or retrofitted, and accepted. Measurement will include

disconnect hangers, backplates, visors, mounting hardware, LED traffic signal lamp units, head programming, mounting connections, and hardware.

736.27.6 Signal Service:

Signal service will be measured per each installed and accepted. Measurement will include disconnect, ground rod, wire, and conduit on service pole, conduit and conductors on utility company pole, and connections and hardware required.

736.27.7 Temporary Traffic Signal Installation: Temporary traffic signal will be measured per each intersection. The contractor shall retain ownership of this equipment after removal. This item will include modifications required for traffic staging, changes in signal phasing as required in the plans, all items for a complete temporary signalized intersection including but not limited to controller, poles, temporary signal heads, microwave vehicle sensors, video vehicle detection system, any maintenance, or adjustment to the microwave vehicle sensors/video vehicle detection system, interconnect equipment, signing, and any miscellaneous equipment for a fully functioning temporary traffic signal intersection. Installation and removal will also be included.

736.27.8 Signal Controller:

736.27.8.1 Contractor Furnish and Install:

1. Signal Controller and Cabinet: Signal controllers will be measured per each controller installed and accepted. Measurement will include all electronic control equipment specified, prewired cabinet, foundation, conduits in foundation, ground rod assembly, anchor bolts and hardware, connections, documentation, programming, and testing.

2. Signal Controller Only: Signal controllers will be measured per each controller furnished and installed by the contractor. Measurement will include all electronic control equipment specified, hardware, connections, documentation, programming, and testing.

736.27.8.2 Department Furnish and Contractor Install: Upon request from the contractor, the Project Engineer will request DOTD Traffic Operations Section to order equipment. DOTD will require approximately 90 calendar days to receive items ordered. The contractor shall be responsible for any inspection and testing of DOTD provided equipment before acceptance. The contractor shall schedule with DOTD Traffic Operations Section, 7686 Tom Drive, Baton Rouge, LA at 225-935-0111 a minimum of five working days in advance to inspect and test equipment before acceptance. Written acceptance of equipment by the contractor is considered verification that the equipment is in complete working order and the contractor has taken full responsibility for the equipment.

1. Signal Controller and Cabinet: DOTD furnished signal controllers and cabinet will be measured per each controller and cabinet installed, and accepted. Measurement will include pickup of the DOTD Signal Controller and Cabinet from the DOTD Traffic Operations Section, all testing of equipment prior to acceptance, and installation of the provided controller and prewired cabinet with anchor bolts. The contractor shall also furnish and install any required foundation, conduits in foundation, ground rod assembly, hardware, connections, documentation, programming, and testing.

2. Signal Controller: DOTD furnished signal controllers will be measured per each controller installed and accepted. Measurement will include pickup of the DOTD provided controller from the DOTD Traffic Operations Section, all testing of equipment prior to acceptance and installation of the provided controller. The contractor shall furnish and install any required hardware, connections, documentation, and programming.

736.27.9 Loop Detector: Detectors will be measured by the linear foot of sawn slot. Measurement will include sawing, installed wire wraps, wire to junction box and sealing. Measurement will be made from the edge of the pavement and once around each loop perimeter.

736.27.10 Video Detection: Video Detection Cabinet Components, will be measured per each and includes Bus Interface Unit (BIU), VDS processor(s) (housed in camera or cabinet), all required materials, tools, equipment, labor, and incidentals as described above, cables, cabinet and communication interface devices, programming, communications software, and other associated equipment such as power supply, a mouse, and a 5 inch to 9 inch video monitor with compatible hardware and cables required for proper operation of the system.

Video Detection Cameras will be measured per each and includes all required materials, tools, equipment, labor and incidentals required to install each video camera. VDS processor will be housed in camera or cabinet, and be fully functioning, per each as indicated on the plans.

Video Camera Cable will be measured per linear foot of cable installed and accepted.

736.27.11 LED Pedestrian Signal Head and Push Button: LED Pedestrian Signal Head and LED Pedestrian Countdown Signal Head will be measured per each and include the following components: single section

housing, hinged door, z-crate visor, LED module, and required mounting hardware to form a complete assembly.

Pedestrian Push Buttons will be measured per each and includes the following components: housing, plunger, switch, electrical components, and mounting assemblies.

736.27.12 Underground Junction Box: Underground junction boxes will be measured per each box installed and accepted. Measurement will include the box, cover, excavation, backfill, and any concrete patching required.

736.27.13 LED Blank-Out Sign: The LED Blank-Out Sign will be measured per each, and shall include the enclosure, LED module, visor, span wire or mast arm mounting assembly, and all materials, tools, equipment, labor, and incidentals required for completion of the work.

736.27.14 Flashing Switch Assembly for Beacons: The Flashing Switch for Beacons, including cabinet, mounting, labor, and all incidental items for a fully functioning flashing switch, will be measured per each for payment by the actual number of units installed, tested, and accepted.

736.27.15 Conduit: Conduit will be measured by the linear foot point to point of conduit installed and accepted. Measurement will include conduit (including conduit within junction boxes), clamps, fittings, above ground junction boxes, and all miscellaneous hardware required for a complete conduit installation.

736.27.16 Conductors: Conductors will be measured by the linear foot of conductor installed and accepted. Measurement will include conductor, clamps, connectors, and all miscellaneous hardware required for a complete conductor installation.

736.27.17 Support Cable (Span): Cable will be measured by the linear foot installed and accepted. Measurement will include cable, clamps, connectors, long insulators, wrapping conductors, and all miscellaneous hardware required for a complete cable installation.

736.27.18 Guy Cable: Guy Cable will be measured by the linear foot of cable installed and accepted. Measurement will include cable, clamps, connectors, anchors, insulators, and all miscellaneous hardware required for a complete cable installation.

736.28 PAYMENT. Payment for traffic signal work will be made at the contract unit prices, which includes all materials, tools, equipment, labor, and incidentals necessary to complete the work.

The concrete in foundations for signal poles, signal controllers, and other signal equipment will be identified by lots and shall be subject to pay

adjustments for Class S concrete in accordance with Table 901-4 and Note 1 therein. Size, sampling, and testing of each concrete lot shall be in accordance with the Materials Sampling Manual.

Payment will be made under:

Item No.	Pay Item	Pay Unit
736-01	Trenching and Backfilling	Linear Foot
736-02	Conduit with Conductors (Size & Type)	Linear Foot
736-03	Jacking or Boring for Conduit (Size & Type)	Linear Foot
736-04	Signal Pole (Size & Type)	Each
736-05	Signal Heads (Type)	Each
736-06	Signal Service	Each
736-07	Traffic Signal System	Lump Sum
736-08	Signal Controller	Each
736-09	Loop Detector	Linear Foot
736-10	Underground Junction Box	Each
736-11	Conduit (Size & Type)	Linear Foot
736-12	Conductor (Size & Type)	Linear Foot
736-13	Cable (Size & Type)	Linear Foot
736-14	Signal Support (Pedestal Foundation Only)	Each
736-15	Signal Support (Strain pole/Mast Arm)	Each
736-16	Temporary Traffic Signal Installation (Intersection)	Each
736-17	Video Detection Cabinet Components	Each
736-18	Video Detection Camera	Each
736-19	Video Camera Cable	Linear Foot
736-20	Video Detection Training	Lump Sum
736-21	LED Pedestrian Countdown Signal Head	Each
736-22	Pedestrian Push Button	Each
736-23	LED Blank Out Sign	Each
736-24	Flashing Switch Assembly For Beacons	Each
736-25	Support Cable (Span)	Linear Foot
736-26	Guy Cable	Linear Foot

Section 737
Painted Traffic Striping

737.01 DESCRIPTION. Furnish and apply reflective white or yellow paint for pavement striping in accordance with plan details, the MUTCD, and these specifications.

737.02 MATERIALS. Traffic paint shall be waterborne and comply with 1015.12. Glass beads for drop-on application shall comply with 1015.13.

737.03 EQUIPMENT. Selection of proper equipment to produce satisfactory results shall be the responsibility of the contractor.

737.04 CONSTRUCTION REQUIREMENTS. Pavement striping shall be 4 inches in width on all routes. Striping widths for gore markings and turning lanes shall be 8 inches unless noted otherwise on the plans. All lines shall have clean edges.

Paint for curbs and islands may be applied by machine or hand methods as accepted by the engineer. Apply all striping on pavement prior to opening to traffic, except when rain or other unavoidable occurrences prevent marking the pavement, in which case mark the pavement as soon as conditions permit. The requirements of 713.07 shall govern over the above mentioned application requirements.

737.04.1 Surface Preparation: Clean surfaces, including ramps and gore areas, to be striped of materials that may reduce adhesion of paint to pavement. Remove all flaking or peeling material to the satisfaction of the engineer by blast cleaning or other approved methods, which do not damage the surface. Blast cleaning equipment must have positive cutoff controls. Keep surfaces clean and dry at the time of paint application.

737.04.2 Weather Limitations: Do not paint striping when pavement surface is wet or damp, when air is foggy or misty, when air or surface temperature is below 50°F, or when wind or other conditions create a dust film on the clean pavement surface before striping can be applied or causes displacement of striping material.

737.04.3 Application: Use the longitudinal joint or existing centerline stripe to determine the location of the centerline of new striping. In the

absence of a longitudinal joint or existing stripe, locate the centerline of new striping with the acceptance of the engineer.

737.04.4 Application Rate: Apply paint at a thickness of 22 wet mils to produce a line of 15 dry mils. Apply temporary paint at a thickness of 15 wet mils. Glass beads shall be uniformly distributed to ensure that the full width of the line is visible at night.

737.04.5 Tolerances: Construct broken lines with a stripe-to-gap ratio of a 10-foot paint stripe to a 30-foot gap. The length of the stripe shall be 10 feet minimum and $10^1/_2$ feet maximum. The stripe-gap cycle shall be 40 feet minimum and 40 ½ feet maximum.

A tolerance of +1/2 inch and -1/8 inch from the specified painted line width will be allowed, provided the variation is gradual. Segments of broken line may vary ± 6 inches from the specified length provided it is not consistently short. Square off painted line segments at each end without mist or drip. Longitudinal painted lines shall not deviate from established alignment by more than 1 inch. The rate of deviation shall not increase or decrease more than 1/2 inch in 25 feet. Remove lines not meeting these tolerances by abrasive blasting or grinding and replace at no cost to the Department. The Project Engineer may waive the tolerance when deviations are caused by undulation in the pavement surface.

737.04.6 Protection of Markings: Do not allow traffic to cross over a wet stripe. Use flaggers or other methods to prevent traffic from crossing the wet stripe or adjust the operation. Repair stripes that have been marred or picked up by traffic before they have dried; clean the pavement outside the stripe at no cost to the Department. The contractor shall be responsible for resolving all issues related to paint on private vehicles at no cost to the Department.

737.04.7 Field Testing of Painted Traffic Striping: Field-test the pavement markings in accordance with 1015.12 and Table 737-1. Replace the portion of the material shown to be out of specifications as directed by the engineer.

Take initial readings within 30 days of application. Any late readings submitted after the 30 days will be considered initial readings. Take the initial retroreflectivity readings with a DOTD inspector present during testing. Upon completion of the testing, the DOTD inspector will immediately take possession of a copy of the retroreflectivity readings in either a hard copy, $8^1/_2$ inch x 11 inch, or electronic format on a USB drive and as noted below. Additionally, provide documentation to the Department that the instrument has been calibrated in accordance with the

manufacturer's requirements, including the required annual factory calibration.

For each material type, take a different set of readings in accordance with Table 737-1. Provide the data to the Department electronically in Microsoft Excel® (xls) format downloaded from the reflectometer data. Each spreadsheet shall have a header that states all of the following:

1. Project number;
2. Date material installed;
3. Type of material installed;
4. Interstate: Specify the route and direction and show the beginning mile-point to ending mile-point of material installed.
5. State Route: Specify the route and direction. Also specify X number mile from intersection to X number mile from intersection, of material installed. (e.g. Route US 61 South; 0.10 Mile South of Old Hammond Highway to 0.2 Mile South of I-12.)

The format for the excel spreadsheet shall be (description, date, and reading). In the description cell the format shall be Route (*i.e.*, LA, US, or I), Direction *(i.e.*, N, S, E, or W), Mile Point and Color (W or Y).

Examples:

LA 115; W; 23; Y.

I-10; S; 4; W.

Table 737-1
Field Testing of Painted Pavement Markings

Length of Roadway (Segment)	Minimum Required Readings
Less than 1 mi	10 evenly spaced readings per line [a, c]
1 to 6 mi	10 evenly spaced readings per line for each 1 mi segment [a, c]
>6 mi	5 evenly spaced readings per line for each 1 mi segment [b, c]
Stop Bars, Cross Walks, Chevrons, Hash Marks, Legends and Symbols	Visual nighttime inspection only
8 inch Lines (Parallel to Roadway)	5 readings per line [b, c, d]

[a] Report average of 10 readings per line segment.
[b] Report average of 5 readings per line segment.
[c] Additional readings shall be taken if deemed necessary by the engineer.
[d] Only initial readings are required.

General Notes:
1. Take readings on each line and color separately except as indicated below.
2. Adjacent lines applied at the same time are considered one line. Alternate readings between each line.
3. Take readings on dry, clean roadways.
4. Collect data in the direction lines were applied except for yellow centerlines on two lane roadways. For yellow centerlines on two lane roadways, collect data against the direction lines were applied.
5. On broken lines (skip striping), no more than two readings shall be taken per stripe, with readings 20 inches from ends of marking. If using a vehicle mounted mobile unit this does not apply.
6. Acceptance will be based on the average of each set of readings for each line segment.
7. Failure of the average reading for any segment to meet the specified minimum values will require replacement, corrective action or be subject to payment adjustments specified in Table 737-2.
8. Limits of replacement will be determined by the engineer.
9. Aggregate Surface Course projects will not be tested for retroreflectivity, but will be visually inspected at night for acceptance by the engineer.
10. Glass beads shall be uniformly distributed to ensure that the full width of the line is visible at night.

737.05 GUARANTEE. All work performed in accordance with this section shall be guaranteed in accordance with 104.05.

737.06 MEASUREMENT.

737.06.1 Painted Traffic Striping: Painted traffic striping will be measured by the linear foot or mile, as specified. When a bid item is not included for wider markings, the Department will measure the quantity by

converting the actual length and width of lines installed to an equivalent length of the normal width line on that section of roadway.

1. Linear Foot: Measurement will be made by the linear foot of striping, exclusive of gaps.

2. Mile: Measurement will be made by the mile of single stripe. No deduction will be made for standard broken-line gaps; however, deductions will be made for the length of other gaps or omitted sections.

737.06.2 Pavement Legends and Symbols: Legends and symbols will be measured per each legend or symbol. Each symbol includes all letters, lines, bars, or markings necessary to convey the message at each location.

737.07 PAYMENT. Payment for painted traffic striping, legends, and symbols will be made at the contract unit prices.

Table 737-2
Payment Adjustment for Initial Retroreflectivity

Contract Unit Price [1], %	Retroreflectivity Number (Painted Markings)	
	White (mcd\lux\sq m)	Yellow (mcd\lux\sq m)
100	250	175
90	230	165
80	220	155
50 or Restripe	200	150

[1] The payment requirements are based on the project total average of all test segments for initial reading in accordance with Table 737-1.

Payment will be made under:

Item No.	Pay Item	Pay Unit
737-01	Painted Traffic Striping (Solid Line)	Mile
737-02	Painted Traffic Striping (Broken Line)	Mile
737-03	Painted Traffic Striping (Solid Line)	Linear Foot
737-04	Pavement Legends and Symbols	Each

Section 738
Mulch Sodding

738.01 DESCRIPTION. Furnish, haul, spread, roll, water, and maintain live grass roots with topsoil at locations shown on the plans or as directed. Fertilize and lime (if required).

738.02 MATERIALS. Mulch sod shall consist of a combination of grass roots and topsoil. Mulch sod shall be predominately bermuda grass or other approved grass roots reasonably free of weeds and debris.

Topsoil shall comply with 715.02.

Fertilizer and agricultural lime shall comply with Section 718.

Obtain water from any source except do not use brackish, chemically contaminated, or oily water.

738.03 EQUIPMENT. Use a single or double type soil roller or culti-packer weighing not less than 500 pounds and not more than 1500 pounds.

Water wagons, tanks, or sprinkling devices will be required.

738.04 CONSTRUCTION REQUIREMENTS.

738.04.1 Preparation: Mow and rake the source of mulch sod approved by the Roadside Development Coordinator when necessary. Do not stockpile mulch sod for more than 48 hours.

738.04.2 Digging and Hauling: Mulch sod shall be free of tree roots, branches, or other debris. Remove such foreign material prior to the sod being stockpiled or delivered. Depth of removal shall be as specified or as directed but not to exceed 12 inches.

Dig and load mulch sod with suitable equipment, and haul to the areas designated and spread to the depth shown on the plans or as directed.

738.04.3 Surface Preparation: Broadcast fertilizer over the entire area to be mulch sodded before mulch sod is placed and disked. When required, furnish and place agricultural lime in accordance with Section 718 to the area to be mulch sodded prior to scarifying. Scarify and pulverize areas to receive mulch sod to a depth of approximately 3 inches and dress to grade at no direct pay.

738.04.4 Spreading: Spread the mulch sod to a depth of approximately 6 inches with a minimum amount of root exposure. Do not

use spike tooth harrows or drags to spread mulch sod. Dress the mulch sod to grade.

738.04.5 Seeding: Apply seed over mulch sodded area as directed and in accordance with Section 717.

738.04.6 Rolling: Roll the mulch sod with a culti-packer or soil roller as directed. Hand-tamp locations inaccessible to rolling equipment.

738.04.7 Watering: Water mulch sod and keep moist until satisfactory growth is established at no direct pay.

738.05 MEASUREMENT. Mulch sod will be measured by the cubic yard in approved hauling vehicles at the point of delivery in accordance with 109.01.

Fertilizer will be measured and paid for in accordance with Section 718. Agricultural lime, when specified, will be measured and paid for in accordance with Section 718.

738.06 PAYMENT. Payment for mulch sodding will be made at the contract unit price per cubic yard, which includes all labor, materials, equipment and incidentals necessary to complete the work.

Payment will be made under:

Item No.	Pay Item	Pay Unit
738-01	Mulch Sodding (Vehicle Measurement)	Cubic Yard

Section 739
Hydro-Seeding

739.01 DESCRIPTION. Prepare seed beds and sow grass seed utilizing hydro-seeding equipment and methods in order to establish a turf grass cover to areas designated on the plans or as directed.

739.02 BED PREPARATION. Prepare seed beds in accordance with 717.04.

739.03 HYDRO-SEEDING GENERAL. Hydro-seeding consists of mixing and applying seed, commercial fertilizer, lime, polyacrylamide tackifier, and mycorrhizal inoculum with paper or wood fiber and water. Uniformly spread seed and commercial fertilizer over the area at the rates specified in Table 717-1 and Table 718-1. Mix and apply paper or wood fiber with the seed in accordance with the manufacturer's recommendations and as approved by the engineer. Fertilizer and lime may be included in the seeding slurry for application during hydro-seeding operations. All of these materials may be included in a single manufacturer's hydro-seeding system. Use Approved Materials List systems.

Determine the application rate for pellet-inoculated seed by using the seed mass exclusive of inoculant materials.

Mix the materials with water according to the manufacturer's specifications. Mix the materials in a tank with a built-in continuous agitation system with sufficient operating capacity to produce a homogeneous mixture, and with a discharge system that will apply the mixture at a continuous and uniform rate. Provide a tank with a minimum capacity of 962 gallons. The engineer may authorize use of equipment of smaller capacity if it is demonstrated that the equipment is capable of performing all operations satisfactorily.

A dispersing agent may be added to the mixture provided evidence is furnished showing that the additive will not affect germination. Do not use any material considered detrimental, as determined by the engineer.

Do not apply any mixture containing polyacrylamide tackifier during rainy weather, or when soil temperatures are below 41°F, or if the wind speed is above 20 miles per hour. Do not permit pedestrian traffic or equipment to enter areas where hydro-seeding has been applied.

Prior to planting, the engineer will contact the Department's Roadside Development Coordinator to select the varieties of seed to be used.

739.04 MEASUREMENT. Quantities for hydro-seeding will be measured by the acre.

739.05 PAYMENT. Payment for hydro-seeding will be made at the contract unit price per acre and shall include the seed, mulch, tackifier, lime, fertilizer, water and bed preparation as a system and all labor and equipment necessary to complete the work.

Payment will be made under:

Item No.	Pay Item	Pay Unit
739-01	Hydro-Seeding	Acre

Section 740
Construction Layout

740.01 DESCRIPTION. This section sets forth requirements for all construction layouts. Establish lines and grades, take all cross-sections, and stake out the construction work in accordance with these specifications, plan details, and as directed. Construction layout also includes, but is not limited to, the layout of pavement striping and raised pavement markers, setting of line and grade for construction of superelevated curves or other applicable work items, and assisting in the coordination of utility relocation activities to ensure that the placement of relocated facilities will not conflict with required construction.

740.02 CONSTRUCTION REQUIREMENTS. Establish all lines and grades and stake out all project work, including sufficient vertical and horizontal control points for utility relocations for use by the Department and others.

The project survey control and horizontal alignment are based on the Louisiana State Plane Coordinate System. The construction plans and/or right-of-way map depicts the coordinates and datum of sufficient survey control points to establish or re-establish horizontal control throughout the length of the project. Employ such methods as approved by the project engineer for the location of the project alignment and other necessary survey control points in accordance with currently acceptable surveying standards and practices. When required, the Department will also provide one bench mark on or near the project for vertical control. Verify the values of any intermediate bench marks shown on the plans, by checking against the bench mark established by the Department for vertical control.

Employ qualified engineering and surveying personnel experienced in layout and construction of highways and bridges to correctly establish and keep complete and comprehensive records (field books or approved electronic files) of all lines and grades necessary from initial layout to final acceptance. Provide sufficient qualified staff, of at least one employee, on site during utility relocation periods. Provide any necessary survey work to ensure there are no utility conflicts with required construction. Provide daily documentation of utility relocation activities for incorporation into the project diaries.

The contractor shall be liable for the accuracy of the initial layout and all subsequent alignment and elevations and shall, at no additional pay, rebuild,

repair or make good any portion of the work found to be incorrectly positioned either horizontally or vertically at any time before final acceptance. Notify the engineer immediately of any apparent errors in the plans. Compute and provide template grades to the engineer. In order to obtain pipe order lengths, provide the appropriate grades to the engineer two weeks in advance of the work.

Numbered notebooks for recording of all lines and grades will be provided by the Department and shall be properly indexed and cross referenced by the contractor before return to the engineer for submittal with the final estimate. Computer generated printouts will be allowed when approved.

Set stationing for overlay projects using an approved measuring device that is accurate to 0.1 percent. Place stakes every 100 linear feet and maintain throughout construction.

For pavement preservation type projects, the contractor will be responsible for recording the location of all existing pavement markings and laying out the required final markings subject to the approval of the Project Engineer.

Perform the layout of striping, raised pavement markers, and signs by methods approved by the engineer prior to placement.

740.03 MEASUREMENT.

Measurements for determination of pay quantities will be made by the Department. Construction layout and utility oversight and coordination will be measured per lump sum, which will include all labor, materials, tools, equipment, and incidentals required to complete the work.

No changes in the lump sum contract price will be made for minor additions or deletions to the scope of work.

740.04 PAYMENT.

Payment for construction layout, and utility oversight and coordination will be made at the contract lump sum price in accordance with Table 740-1 and Table 740-2, respectively.

Table 740-1
Construction Layout Payment Schedule

Percent of Total Contract Amount Earned	Allowable Percent of Lump Sum Price for Construction Layout
Staffed	25
25	50
50	80
75	95
100	100

Table 740-2
Utility Oversight and Coordination Payment Schedule

Percent of Utility Relocation Complete	Allowable Percent of Lump Sum Price for Construction Layout
Staffed	25
25	50
50	65
75	80
100	85
Project Completion	100

Payment will be made under:

Item No.	Pay Item	Pay Unit
740-01	Construction Layout	Lump Sum
740-02	Utility Oversight and Coordination	Lump Sum

Section 741
Water Distribution Systems

(Supplemental Specification)
(Under Separate Cover)

Section 742
Sanitary Sewer Systems

(Supplemental Specification)
(Under Separate Cover)

Section 743
Airport Pavement Markings

(Supplemental Specification)
(Under Separate Cover)

Section 744
Traffic Control Devices

(Supplemental Specification)
(Under Separate Cover)

PART VIII — STRUCTURES

Section No. **Page No.**

801 General Requirements for Structures 532
802 Structural Excavation, Backfill, and Earth Retaining Systems 538
803 Drilled Shafts..... 558
804 Piles 591
805 Structural Concrete 617
806 Deformed Reinforcing Steel 641
807 Structural Metals 647
808 Steel Grid Flooring 679
809 Welding 682
810 Bridge Railings, Hand Railings, Permanent Roadway Barriers, and Pier Protection Systems 684
811 Painting and Protective Coatings 687
812 Treated Timber 723
813 Concrete Approach Slabs 728
814 Bearings..... 731
815 Joints 737
816 Bridge Drainage Systems 743
817 Temporary Works 746
818 Marine Pier Protection 755
819 Reserved 765
820 Movable Bridges 766
821 Mechanical Systems 794
822 Electrical Systems 867
823 Facilities 879
824 Reserved 896
825 Reserved 897
826 Reserved 898
827 Reserved 899
828 Reserved 900
829 Instrumentation and Evaluation 901
830 Repair and Rehabilitation..... 904

Section 801
General Requirements for Structures

801.01 DESCRIPTION. This section sets forth general content for plans and requirements for submittals and project documentation.

801.02 ACRONYMS AND ABBREVIATIONS. See 101.02 for additional acronyms and abbreviations.

CADD	Computer Aided Design and Drafting
EOR	Engineer of Record
PDF	Portable Document Format

801.03 DEFINITIONS. See 101.03 for additional definitions.

Assembly Drawings. Drawings produced by the contractor that show how items will be assembled and installed on the project.

Bridge Engineer. Either the Bridge Design Engineer Administrator or the Bridge Maintenance Engineer Administrator, depending on design responsibility.

Cut Sheet. Information provided by the manufacturer related to a particular manufactured item.

Shop. A facility where items are fabricated, assembled, and/or tested.

Shop Drawings. Drawings produced by the contractor that show how the shop intends to fabricate items.

801.04 PLANS. Plans will be in accordance with 105.02.1, and include all original contract drawing sheets and other information sheets produced by the Department prior to bid, and change order sheets produced by the Department or the contractor after the bid.

Plans may include special details, standard plans, traffic data, construction phasing, geotechnical data, hydraulic data, hydrographic data, as-built plans for existing structures, environmental commitments, permit and coordination requirements, contact information for other agencies, and other details determined by the designer to be beneficial to bidding and construction.

Refer to 105.04 for order of precedence for contract documents.

801.04.1 Geotechnical Data: Geotechnical data may be provided by the Department in accordance with 102.06. Geotechnical data may include soil borings, soil analyses, and other soil investigations.

If actual subsurface conditions differ materially from those indicated on the plans, promptly notify the Bridge Engineer in writing of the specific differing conditions before further disturbing the site and before performing additional work.

801.04.2 Equal or Better Item Substitutions: Manufactured items identified on the plans by indicating a manufacturer and part number shall be considered to be followed by the phrase "or item of equal or better quality and function."

Items submitted as equal or better substitutions shall provide quality and function equal to or better than that specified in the contract. Redesign, modifications, and/or replacement of other items to accommodate the installation and operation of a submitted item is the responsibility of the contractor, and shall be provided at no additional cost or contract time to the Department. Coordination with interfacing disciplines affected by the submitted item is the responsibility of the contractor.

801.04.3 Change Order Plan Sheets: Change order plan sheets will become part of the contract in accordance with 801.06 and shall conform to the Department's CADD Standards.

801.04.4 Notations for Specific Plan Sheets

801.04.4.1 Mechanical Plans: Contract plan sheets noted with an "M" indicate mechanical plans.

801.04.4.2 Electrical Plans: Contract plan sheets noted with an "E" indicate electrical plans.

801.04.4.3 Architectural Plans: Contract plan sheets noted with an "A" indicate Architectural plans.

801.05 SUBMITTALS. Submittals shall be in accordance with the following unless otherwise specified. Furnish submittals for review or record to the Project Engineer and the Bridge Engineer in accordance with 105.02.2.

A working drawing submittal for review will require each sheet to go through the review process. The submittal review process is not complete until each sheet is stamped accepted.

The Department reserves the right to request the submittal of additional information even if the requested information was not specified in the contract.

801.05.1 Processes: Conform to 105.02.2 for submittals and the following.

801.05.2 Formats: Produce working drawing submittals using CADD software. Contract plan sheets shall not be used for working drawings. CADD

files shall be formatted to print on a full scale sheet. Working drawings shall follow established industry standards, symbols, and detailing techniques, and shall be legible when reduced to half scale. Sheets that are cluttered and difficult to read may be rejected. Each sheet shall have a title block indicating the state project number, project name, parish name, contractor's name, sub-contractor's name, and a revision block to record the number and date of each revision. Previously submitted sheets shall have changes noted by either revision symbols or drawing a cloud surrounding the change with changes noted in the revision block.

Non-drawing submittal documents (cut sheets, calculations, test reports, etc.) shall be formatted to print on letter size sheets. Each submittal sheet shall display the state project number, project name, parish name, contractor's name, sub-contractor's name, manufacturer's name, and the sheet and item number from the contract plans.

801.05.2.1 Electronic: Unless otherwise approved by the Bridge Engineer, transmittal of submittals shall be done electronically.

Transmit submittals to the Department electronically in Portable Document Format (PDF) format. Prepare PDF files using 300 dpi minimum resolution, ISO 32000 (or newer) PDF electronic file, or as specified. Use higher resolution if required for clarity. CADD drawings shall be electronically converted directly to PDF. Other submittals that are converted to PDF from a paper copy shall be scanned at a minimum resolution of 300 dpi.

Group related submittal sheets into an individual PDF file.

Grayscale PDF files are preferred. Use color PDF files if required for conveyance of information.

Transmit electronic files through an approved file transfer system or other approved method.

When e-mails are used to transmit submittals or other project information, list the state project number, project name, and a brief description of the content in the subject line, e.g., "H.001498 Company Canal Bridge – Span Lock Shop Drawings."

801.05.2.2 Paper Reproductions: Print paper reproductions directly from the PDF file returned by the Department showing the "Accepted in accordance with LSSRB 105.02" stamp, reviewer initials, and date reviewed. No modifications are allowed without resubmittal.

Ink and toner for all paper reproductions shall be black or color as required, and shall be permanent as defined by industry standards. Normal handling and stacking shall not cause the print to smear or rub off.

801.05.2.2.1 Full Scale Sheets: Full scale sheets shall have an outside edge measuring 22 inch x 34 inch, a 0.50 inch margin on the top, bottom, and right hand side of the sheet, and a 2.0 inch margin on the left hand side of the sheet.

Provide high quality, opaque, white bond paper with a minimum 24 pound weight and a minimum 95 percent brightness.

801.05.2.2.2 Half Scale Sheets: Half scale sheets shall have an outside edge measuring 11 inch x 17 inch. Drawings shall be an exact 50 percent reduction of the full scale drawing. Provide a 0.25-inch margin on the top, bottom, and right hand side of the sheet, and a 1.0 inch margin on the left hand side of the sheet.

Provide high quality, opaque, white bond paper with a minimum 24 pound weight and a minimum 95 percent brightness.

801.05.2.2.3 Letter Size Sheets: Letter size sheets shall have an outside edge measuring 8.5 inch x 11 inch.

Provide high quality, opaque, white bond paper with a minimum 20 pound weight and a minimum 95 percent brightness.

801.05.3 Requirements for Specific Submittals: Conform to 801.05 and as amended in respective sections of the *Standard Specifications*.

801.05.3.1 Shop Drawings: Submit shop drawings electronically to the Bridge Engineer for review for all fabricated items. When specified, submit shop drawings directly to the Engineer of Record and copy the Bridge Engineer on all correspondence and transmittals.

Prepare shop drawings under the direct supervision of the shop that will perform the work. Do not use contract plan sheets as shop drawings.

For bidding purposes, allow a review period of 14 calendar days per 50 sheets, but a minimum of 14 calendar days per each submittal and per each resubmittal. Review periods for separate submittals are not concurrent.

Provide a shop drawing submittal schedule to the Bridge Engineer prior to the preconstruction conference.

For drawings returned for correction, indicate changes made by placing a reference symbol near the change and note in the revision block. Resubmit to the Bridge Engineer for review. Drawings with unmarked or unnoted changes will be returned without review.

Provide five full scale paper reproductions of the electronically distributed accepted shop drawings to the Bridge Engineer for Department internal distribution and archiving. If the contractor's quality control procedures require modifying the accepted file to indicate release for

fabrication, submit the modified file for review, stamping and electronic distribution. Print paper reproductions directly from the accepted final electronic submittal without modifications.

801.05.3.1.1 Structural Metals: Provide, as a minimum, the following information.

Show material types, sizes, and dimensions; camber and layout information; locations, types, and sizes of welds; locations, types, and dimensions of connections; locations and sizes of bolts and holes; identification and requirements for fracture critical members; coating requirements; shop assembly; and information required by the contract.

801.05.3.1.2 Precast Concrete: Provide, as a minimum, the following information.

Show material, details, and dimensions of members; details of casting bed layouts; and all holes, appurtenances, attachments, devices, etc.

For prestressed and post-tensioned members, show stressing data, location and method of holding draped strands, debonding details, and method and sequence of strand detensioning.

801.05.3.1.3 Sign Structures and Devices: Provide, as a minimum, the following information.

Show material types and sizes; equipment type and sizes; sign structure part details and mounting brackets; location type and size of welds; and location type and dimensions of connections.

Show required dampers for aluminum overhead sign trusses.

801.05.3.1.4 Illumination Systems and High Mast Towers: Provide, as a minimum, the following information.

Show connections, bases, welds, anchor bolts, handhole reinforcement, and erection procedures. Conform to 801.05.3.1 for structural metals.

Electrical system components shall be in accordance with Section 822.

801.05.3.2 Transportation and Erection Plan: Provide to the Bridge Engineer for review, as a minimum, the following information.

Show means and method of transportation; drawings with dimensions and erection marks to properly coordinate with shop drawings; location of each girder in each span; erection sequence, procedures and equipment; falsework location and sequence of field splices; and calculations supporting the proposed method of transportation and erection. Use member designations from the plans. For precast members, show date of casting on one end of member.

Transportation and erection plans shall be designed, sealed, and dated by a professional engineer registered in Louisiana.

801.05.3.3 Shipping Statements and Shop Bills: Submit to the Project Engineer at least one paper copy of shipping statements or notices as each shipment of structural metal is delivered to the project. Show weights of individual members on shipping statements.

801.05.3.4 Color and Material Samples: Submit to the Bridge Engineer for review color and material samples as indicated on the plans.

801.05.3.5 Sign Face: Submit electronically for review to the Traffic Engineer Division Administrator sign face details. Acceptance and distribution of the paper reproduction of the accepted submittal is required prior to submittal of drawings for fabrication and erection of the corresponding sign support structures.

Section 802
Structural Excavation, Backfill and Earth Retaining Systems

802.01 DESCRIPTION. Excavate materials necessary to facilitate construction. Furnish, place, and compact backfill. Dispose of excess excavated material and obstructions in accordance with Section 202, as directed by the Project Engineer, so that such activities will neither adversely affect hydraulics nor be unsightly.

Furnish and install sheeting of the type, size, dimensions, and locations specified meeting the required penetration and resistance with an undamaged cross-section. Design, furnish, and construct Mechanically Stabilized Earth Walls (MSEW) in conformance with the lines, grades, design, geotechnical requirements, and dimensions shown on the plans and the MSEW specifications.

802.02 MATERIALS. Comply with the following unless otherwise specified:

Concrete	901
Coal Tar Epoxy-Polyamide Paint	1008.04
Reinforcing Steel	1009
Hardware	1013
Metal Sheet Piles	1013.10
Timber and Preservatives	1014

802.03 STRUCTURAL EXCAVATION.

802.03.1 General Requirements: Excavations shall be shored, sheeted, or braced in accordance with 701.03 or as required.

With the approval of the Project Engineer, formwork for footings may be omitted when the control of water is sufficient to allow construction in the dry. In such cases, provide excavation to plan dimensions.

When required, provide water control in accordance with Section 817.

802.03.2 Preservation of Channel: Unless approved by the Project Engineer, do not excavate outside of sheeting, cofferdams, cribs, or caissons or disturb the natural stream bed adjacent to the structure. If excavating or dredging at the site of the foundation, then, under agreement with permitting agencies and the Project Engineer, backfill such excavation to the original

ground surface or river bed with satisfactory material after the foundation is in place. Remove excess material deposited within the area of the stream and return channel to its natural state.

802.03.3 Preparation of Footing Foundations: Do not make final removal of foundation material to grade until just before concrete is placed.

For soft foundation material, add compactable material to provide a firm foundation for footing. Clean hard foundation material of loose material and cut to a firm level, stepped, or roughened surface, as directed.

802.03.4 Water Control: Excavations below the groundwater table or water level will require water control to permit construction in the dry and maintain stability of the excavation base and sides. Control water infiltrating the excavation with sheeting, sumps, pumps, seals, cofferdams, well point systems or other accepted methods.

Submit the proposed method of water control to the Project Engineer for record. Conform to Section 817 for temporary works.

802.04 BACKFILL. For MSEW backfill, comply with 802.05.2.

Provide backfill material of acceptable quality, free from large or frozen lumps, wood or other foreign material.

Backfill all excavated spaces to natural ground maintaining uniform lateral loading.

Backfill reinforced concrete box culverts and attached headwalls in accordance with 701.08. Provide adequate cover over reinforced concrete box culverts before heavy construction equipment may cross the installation to prevent damage to the box culvert.

Place backfill material in a dry excavation for footings in horizontal lifts and compact to the satisfaction of the Project Engineer.

Place backfill material in a dry excavation for other structures in horizontal layers not exceeding 9-inch loose thickness and uniformly compact by approved methods to the satisfaction of the Project Engineer. Jetting of backfill behind abutments and wingwalls will not be permitted.

Do not place backfill against a concrete abutment, wing wall, or reinforced concrete box culvert until concrete has been in place a minimum of 14 calendar days, or until test cylinders made in accordance with DOTD TR 226 and tested in accordance with DOTD TR 230 have obtained a minimum compressive strength of 3000 psi.

802.05 EARTH RETAINING SYSTEMS.

802.05.1 Sheet Piles: Concrete sheet piles shall be precast-prestressed piles fabricated in accordance with 805.09.

Steel sheet piles shall be fabricated in accordance with Section 807.

Timber sheet piles shall have tongues and grooves of suitable proportions, either cut from the solid material or made by building up the piles with three planks fastened together. Piles shall be drift-sharpened at their lower ends to wedge adjacent piles tightly together during driving. Treated timber shall be either Southern Pine or Douglas Fir, complying with Section 812. Use galvanized hardware.

802.05.1.1 Permanent Sheeting: Provide new sheeting as shown in the contract plans. Clean and apply corrosion protection in accordance with 802.05.1.4**.**

802.05.1.2 Temporary Sheeting: Where contract plans require temporary sheeting, the plans will specify the required design for sheeting. Sheeting may be new or used and will not require corrosion protection. Typically, remove sheeting when no longer required. However, when impractical to remove or when required on the plans, sheeting may remain in the completed work.

802.05.1.3 Contractor Sheeting: Sheeting used at the contractor's option shall be in accordance with Section 817, "Temporary Works." The contractor shall be responsible for the design and details of the sheeting. Sheeting may be new or used, not require corrosion protection, and shall be removed when no longer needed unless otherwise approved.

802.05.1.4 Corrosion Protection: Before driving sheeting which requires corrosion protection, clean and paint, or galvanize surfaces of steel sheet piling from the top of the sheet pile to a point 10 feet below the ground or mudline. Clean in accordance with Section 811 using Commercial Blast Method. Paint using a two coat coal-tar epoxy-polyamide paint system or galvanize in accordance with Section 811.

802.05.1.5 Driving: Drive sheet piles with hammers adequate to drive the piles to required depth in satisfactory condition, in accordance with Section 804. To maintain satisfactory alignment, drive sheet piles in increments of penetration necessary to prevent distortion, twisting out of position, or pulling apart at interlocks. Extract sheet piles damaged during driving, or driven out of proper position or driven below cut-off elevation, and replace with new piles at no additional cost or time to the Department. The contractor assumes full responsibility for any damage, settlement, or

movement of adjacent structures or embankment settlement caused by the pile driving operation.

Use of jets, pre-boring, or vibratory hammer will require written approval of the Project Engineer. If the sheeting is used to support the structure, vibratory hammers will not be allowed for driving.

802.05.1.6 Cut-offs for Sheeting to Remain in Place: Cut off tops of sheet piles or drive to a straight line at the elevation indicated on the plans or as directed. If heads of sheeting are appreciably distorted or otherwise damaged below cut-off level, remove and replace damaged portions.

Treat tops of timber sheet piles after cut-off in accordance with 812.06 or use bent down galvanized metal coverings. Bend down coverings at least 3 inches on each side and nail to the vertical surface of sheet piles with large-headed galvanized roofing nails.

802.05.2 Mechanically Stabilized Earth Wall (MSEW): Two categories of MSEW systems are permitted: Modular Concrete Block and Panel walls. Adhere to the design details for the MSEW structures such as specified geogrid, strip, or mesh; facing element dimensions; loading conditions; leveling pad dimensions; temporary surcharge retaining walls; and details for appurtenances. Value engineering proposals for other MSEW systems will not be considered. Only approved MSEW systems will be considered. The list of approved MSEW systems, MSEW system approval policy, and the MSEW design guide are available at the Department's Pavement and Geotechnical Services web site.

802.05.2.1 MSEW Submittals: Comply with 801.05.

1. MSEW Design Package

Submit to the Project Engineer the MSEW Design Package for review. Allow 45 calendar days for each review cycle. Affix a legible seal, date, and signature of the responsible Professional Engineer registered in the State of Louisiana. Do not begin any fabrication or construction prior to written acceptance of the MSEW Design Package.

Include computer generated design and working drawings.

Include a copy of the computer program with a complete and legible hand calculation check for the most critical geometry and loading condition that will govern the design of the MSEW for verification of the accuracy of the computer generated solution. Document all loading conditions, design calculations, and assumptions. For all calculations, include all load cases that exist at completion and during construction for any required surcharges, hydraulic conditions, live loads, and loading combinations. Include a

summary of the design computations indicating design section, geometry, loadings, and analysis results.

Include working drawings showing horizontal and vertical alignment of the walls and the existing and proposed ground lines shown in the contract plans. Clearly show the vertical bearing pressures exerted by the MSEW structure corresponding to wall heights and reinforced backfill lengths. Show all information needed to fabricate and erect the walls including:

1. Existing ground elevations that have been verified by the contractor for each location
2. MSEW profile elevation showing at least the following: top of the leveling pad elevations, maximum bearing loads, and top of wall elevations.
3. Details of all joints, including slip joints, indicating type, size, and manufacturer
4. Details of wall batter
5. Shape, dimensions and details of facing elements
6. The number, size, type, and details of the soil reinforcing elements
7. Details of facing/reinforcement connections
8. Details showing location and installation of geotextile fabric
9. Details of the leveling pad showing dimensions
10. Finishing details at the top of wall (i.e., cap block, coping)
11. Details at miscellaneous obstructions (i.e., utility conduits) located below the ground surface
12. Details at bridge foundation obstructions including pilings
13. Wall termination and interface details, including compaction requirements
14. Dimensions of structural backfill required
15. Any additional details pertaining to coping, railing, temporary facing, and internal drainage, as required by the contract plans.

2. <u>MSEW Certification Package</u>

Submit to the Project Engineer the MSEW Certification Package for review. Allow 21 calendar days for each review cycle. Do not deliver soil reinforcement or facing elements to the site without written acceptance of the MSEW Certification Package.

Submit a Certification Package prepared by the MSEW supplier or MSEW component manufacturer. Document certified values as indicated in the Department's MSEW Design Guide. Include a Certificate of Compliance

that certifies the following meet or exceed MSEW design requirements (as applicable to the MSEW system):

1. Ultimate tensile strength of soil reinforcement (T_{ULT})
2. Allowable tensile load of soil reinforcement (T_a)
3. Allowable connection load between the facing element and the soil reinforcement (T_{ac})
4. Soil reinforcement pullout coefficients meet or exceed the MSEW's required design (F*, α)

The Department will perform testing in case of a dispute over the validity of values. For tests not performed by the Department, supply test data from an approved laboratory to the Project Engineer to support the certified values. Perform additional tests at no added cost or time to the Department. If the required documentation is not provided for individual reduction factors (RF) or pullout coefficients (F*, α), use default values for these design parameters in accordance with the Department's MSEW Design Guide. Indicate the use of default values in the Certificate of Compliance.

3. <u>MSEW Facing Element Concrete Mix Design</u>

Submit to the Project Engineer the concrete mix design for review. Allow 21 calendar days for each review cycle.

802.05.2.2 MSEW Design: The plans will specify a minimum reinforced backfill length that satisfies the external stability of the MSEW system.

Design MSEW structures as gravity walls for internal stability of the reinforced backfill. Design internal stability for the required reinforced backfill length and strength, facing/soil reinforcement connection strength, and facing stability. Specify the minimum required wall face batter to limit the amount of horizontal movement resulting from the outward rotation of the wall.

Design any temporary MSEW facings required during phased construction, temporary surcharge retaining walls located above the permanent MSEW structure, or other temporary construction systems that are required to build the permanent MSEW.

Design permanent MSEW and temporary construction systems in accordance with the Department's MSEW Design Guide and current edition of the *AASHTO LRFD Bridge Design Specifications*. The Department will not accept designs based on methodology other than required by these specifications.

Provide top of wall elevations in accordance with the plans, except an increase of up to 8 inches may be allowed, and will be at no additional cost or

time to the Department. Design top of wall elevations to allow for proper interfacing with barriers, copings, surface ditches, bridge abutments, etc. as shown in the plans.

Provide top of leveling pad elevations in accordance with the plans, except an increase in the embedment depth of the pad of up to 20 inches may be allowed, and will be at no additional cost or time to the Department. Set leveling pad elevations to allow for transverse and longitudinal drainage structures shown on the plans.

Do not terminate wall over pile supported foundations.

802.05.2.3 MSEW Materials: Provide all applicable materials and components such as the facing elements, reinforced backfill materials, backfill reinforcement, geotextile fabric, facing aggregate, internal drainage system (if required), and all other necessary components.

1. Facing Elements

Provide a Certificate of Delivery for each shipment of facing elements listing particular lots shipped.

Provide portland cement concrete with a minimum 28-day compressive strength of 4,000 psi and a maximum water absorption limit of 6 percent. Furnish admixtures conforming to 1011.02.

a. Casting

Notify the Fabrication Inspection unit of the Construction Division at least 7 days prior to the production of facing elements.

For modular concrete block walls, cast blocks in rigid molds in a manner that will assure the production of uniform elements. Place concrete in each block without interruption and consolidate by the use of an approved method. Clearly mark each lot with the date of manufacture, lot number, and type of block in accordance with the accepted MSEW system drawings. Steam cure the blocks for a minimum of 24 hours. Do not ship blocks before reaching a minimum compressive strength of 4,000 psi.

For panel walls, cast panels on a flat surface with the front face of the panels at the bottom and the back face facing upward. Set tie strips or welded mesh connectors into the rear face. Place concrete in each unit without interruption and consolidate by the use of an approved vibrator, supplemented by such hand tamping as necessary to force the concrete into the corners of the forms. Clearly scribe the date of manufacture and panel identification number on the rear face of each panel. Cure panels with wet burlap for a minimum of 72 hours. Leave forms in place until they can be removed without damage to the panel. Panels will be considered acceptable based on the compression

tests and by visual inspection. Use Grade 60 reinforcing steel in accordance with Sections 806 and 1009.

b. Finish and Tolerances

Furnish tan (sandstone) modular concrete blocks unless another color is shown on the plans. Manufacture modular blocks within the following tolerances:

1. Length: ± 1/8 inch of the specified dimension
2. Width: ± 1/8 inch of the specified dimension
3. Height: ± 1/16 inch of the specified dimension

When a broken or fractured face is required, furnish blocks having a front face dimension within 1.5 inches of the dimension shown on the plans.

In accordance with 805, furnish wall panels with a front face consisting of Class 2, and Class 3 surface finishes and a rear face consisting of a uniform surface finish. Roughly screed the rear face of the panel to eliminate open pockets of aggregate and surface distortions in excess of 1/4 inch. Manufacture panels within the following tolerances:

1. All dimensions: ± 3/16 inch
2. Angular distortion (height): ≤ 0.2 inch in 5 feet
3. Defects on formed surfaces: ≤ 0.1 inch in 5 feet

c. Compressive Strength

Modular concrete block compressive strength will be determined on a per lot basis with random sampling in accordance with ASTM C140. Furnish blocks in lots of no greater than 10,000 blocks and maintain clear lot identification until acceptance of testing results. Furnish compressive strength test results from the manufacturer. Upon request submit test specimens prepared by the manufacturer to the Department for testing. Furnish compressive strength test specimens conforming to the saw-cut coupon provisions of Section 5.2.4 of ASTM C140. The Department will accept block lots when the average compressive strength of three test coupons is 4,000 psi with no individual test having a compressive strength less than 3,500 psi. The Department will reject block lots not meeting the above requirements.

Concrete panel compressive strength will be determined on a per lot basis with random sampling. Identify concrete lots no greater than 50 cubic yards for compressive strength testing. For each lot, create a compressive strength sample consisting of six cylinders made in accordance with DOTD TR 226. Submit test specimens to the Department for testing or test cylinders in pairs in accordance with DOTD TR 230 and furnish compressive strength results to

the Project Engineer. The Department will accept panel lots when the average compressive strength of a pair of tested cylinders achieves 4,000 psi within 28 days. The Department will reject panel lots not meeting the above requirements.

d. Handling, Storage, and Shipping

Handle, store, and ship facing elements in such a manner as to prevent chipping, cracks, fractures, discoloration, and excessive bending stresses. Support stored panels on firm blocking located immediately adjacent to tie strips to avoid bending the tie strips.

The Department will reject facing elements that fail to meet any of the requirements specified above or that exhibit any of the following defects:

1. Defects that indicate imperfect molding.
2. Defects indicating honeycomb or open texture concrete.
3. Cracked or chipped blocks.
4. Color variation on front face of block due to excess form oil or other reasons.

e. Block Fill

When modular concrete blocks require block fill, furnish and construct block fill in accordance with the manufacturer's recommendations. Show the block fill on the shop drawings.

f. Cap Blocks

Unless shown otherwise in the plans, furnish and construct cap blocks consisting of a precast concrete cap placed over the uppermost level of blocks. Secure cap blocks with an epoxy adhesive from an approved source listed in AML. Utilize an epoxy adhesive providing a minimum of 50 percent surface coverage. Do not allow epoxy to drip down the front face of the wall.

g. Coping

If required in the plans, construct a cast-in-place or precast concrete coping or half connector placed over the uppermost level of facing elements or as shown on the accepted working drawings. Utilize a Class A1 concrete conforming to Section 901. Apply a Class 3 special finish to the cast-in-place concrete coping conforming to 805.08 and 1011.03. Utilize Gray for the special finish color unless shown otherwise in the plans.

2. Inextensible Soil Reinforcement

Furnish galvanized steel reinforcing conforming to the required shape and dimensions and free of defects that may impair their strength and durability. The Department will sample and test reinforcing before fabrication or erection of the MSEW structure. Galvanize and repair damaged galvanized coatings in accordance with 811.08 prior to the soil reinforcement installation.

When reinforcing steel strips are specified, provide galvanized steel strips hot rolled from bars to the required shape and dimensions with physical and mechanical properties conforming to ASTM A572 Grade 65.

When reinforcing welded wire mesh is specified, provide galvanized shop-fabricated cold drawn steel wire reinforcing mesh and narrow ladders conforming to AASHTO M 55 and the minimum requirements of ASTM A-82 and welded into the finished mesh fabric in accordance with ASTM A-185. Utilize the same size longitudinal and transverse wires. Apply galvanization after the mesh is fabricated.

3. Extensible Soil Reinforcement

Provide reinforcing conforming to the required shape and dimensions and free of defects that may impair their strength and durability. The Department may sample and test reinforcing before fabrication or erection of the MSEW structure.

a. Geosynthetic Soil Reinforcement

Utilize woven geotextile reinforcement consisting only of long chain polymeric filaments or yarns formed into a stable network. Utilize geogrid reinforcements consisting of a regular network of integrally connected polymer tensile elements with aperture geometry sufficient to permit significant mechanical interlock with the surrounding soil. Use geosynthetic reinforcement having a dimensionally stable structure and able to retain its geometry under construction stresses. Furnish geosynthetic reinforcement with high resistance to damage during construction, to ultraviolet degradation, and to all forms of chemical and biological degradation encountered in the soil being reinforced.

Check the geosynthetic soil reinforcement upon delivery to ensure that the proper material has been received. Label geosynthetic rolls in accordance with ASTM D4873, Guide for Identification, Storage, and Handling of Geosynthetic Rolls. Protect the geosynthetic materials from temperatures greater than 140°F, mud, dirt, dust, and debris during all periods of shipment and storage. Follow the manufacturer's recommendations regarding protection from direct sunlight. The Department will reject any geosynthetic not meeting material specifications or exhibiting defects, tears, punctures, flaws, deterioration, or damage. Replace any deficient or damaged geotextile fabric or geosynthetic reinforcement at no additional cost to the Department.

The Department may submit the test samples collected to an approved independent laboratory for verification testing. Do not construct the MSEW structure until the results of the verification testing indicate that soil

reinforcement delivered to the site is in conformance with these specifications and the approved manufacturer's Certification Package.

If requested by the Department, when the type of geosynthetic soil reinforcement selected requires special equipment and/or testing procedures other than those normally used by the Department, provide special equipment and/or testing procedures to the Department at no additional cost.

4. Reinforced Backfill and Block Backfill Materials

Utilize a select granular reinforced backfill material unless a stone backfill is specified. Use granular and stone backfills from an approved source listed in AML with the following additional engineering properties and material requirements.

When using granular reinforced backfill and modular concrete block fill comply with the following properties:

1. pH values shall range between 5.0 and 9.0 (DOTD TR 430).
2. Organic content shall not exceed 0.5 percent (DOTD TR 413).
3. Internal friction angle shall not be less than the values specified below as determined by the standard direct shear test, AASHTO T236 or the unconsolidated-undrained triaxial test, AASHTO T296. Mold and test samples within 2 percent of the optimum moisture content for the material as determined by DOTD TR 418.

When using granular reinforced backfill and modular concrete block fill or stone with steel soil reinforcement comply with the following electrochemical properties:

1. Resistivity > 3,000 ohm cm (DOTD TR429).
2. Chloride content < 100 ppm (AASHTO T 291).
3. Sulfate content < 200 ppm (AASHTO T 290).

Test backfill material during initial source approval or if a change in the source is requested to ensure all property requirements are met. Sample backfill material once every 1,000 cubic yards and test the gradation and pH. Sample backfill material once every 5,000 cubic yards and test the internal friction angle, organic content, resistivity, chloride content, and sulfate content. When granular backfill is specified, provide a minimum internal friction angle (φ) of 34 degrees and comply with the gradation requirements shown in Table 802-1.

Table 802-1
Granular Backfill Gradation

U.S. Sieve Size	Percent Passing
3/4 inch	100
No. 4	20 - 100
No. 10	15 - 85
No. 40	10 - 35
No. 100	0 - 10
No. 200	0 - 5

When stone backfill is specified, provide a minimum internal friction angle (φ) of 34 degrees, and comply with the gradation requirements shown in Table 802-2.

Table 802-2
Stone Backfill Gradation

U.S. Sieve Size	Percent Passing
1 inch	100
3/4 inch	90 - 100
3/8 inch	20 - 55
No. 4	0 - 10
No. 8	0 - 5

5. Reinforcement Attachment Devices

Furnish galvanized attachment devices conforming to the required shape and dimensions free of defects that may impair their strength and durability. The Department will sample and test the reinforcing and attachment devices prior to fabrication or erection of the MSEW.

Shop fabricate tie strips from hot rolled steel conforming to ASTM A1011, Grade 50. Galvanize and repair damaged galvanized coatings in accordance with 811.08 prior to the soil reinforcement installation.

Furnish galvanized fasteners consisting of hexagonal cap screw bolts and nuts conforming to Sections 807 and 811.

Furnish connector pins and mat bars fabricated from ASTM A36 steel and weld to the soil reinforcement mats. Furnish connector bars fabricated of cold

drawn steel wire conforming to AASHTO M32. Galvanize connector pins and connector bars in accordance with 811.08.

6. Leveling Pad

Construct an unreinforced concrete leveling pad of Class M Concrete conforming to Section 901.

7. Geotextile Fabric

Furnish fabric resistant to chemical, biological, and insect attack conforming to Section 1019, Classes B, C, or D.

8. Free Draining Aggregate

Provide free draining aggregate consisting of crushed stone or crushed gravel and with the specified gradation for stone backfill in accordance with Table 802-2.

9. Geomembrane

If indicated in the plans, furnish a single-layer continuous polymeric sheet manufactured from a virgin polymeric resin conforming to the requirements of Table 802-3.

Table 802-3
Geomembrane

Property	Test Method	Minimum Requirements
Thickness, mils	ASTM D5199	40
Tensile Strength, lb/in.	ASTM D882 1-in. strip	70
Tear Strength, lb.	ASTM D1004 Die C	20
Puncture Strength, lb.	ASTM D4833 modified	40
Impact, ft.-lb.	ASTM D1424 modified	25

802.05.2.4 MSEW Construction Requirements:

1. Wall Excavation and Foundation Preparation

Construct a graded level foundation for the MSEW structure for a width equal to or exceeding the length of the soil reinforcements plus 1 foot or as shown in the plans. Prior to the MSEW construction, compact the foundation with a smooth vibratory wheel roller weighing a minimum of 8 tons for at least five passes or as directed by the project engineer. Remove any

foundation soils found to be unstable by the engineer and replace with backfill material compacted to 95 percent of the maximum dry density in accordance with DOTD TR 415 or TR 418.

2. Leveling Pad Construction

At each MSEW foundation level, provide a precast reinforced or cast-in-place unreinforced concrete leveling pad of the type shown on the plans. Allow the leveling pad a minimum of 12 hours curing time before placement of wall blocks. If permanent MSEW facing is installed in front of a temporary MSEW facing, install the leveling pad just prior to construction of the permanent MSEW facing.

3. MSEW System Supplier's Representative

Provide a qualified and experienced representative from the MSEW system supplier until the project engineer is satisfied that the Department and contractor personnel are proficient with the MSEW construction procedures. Submit representative qualifications to the Department for approval prior to the start of wall construction. Make the representative available as needed by the project engineer during construction of the MSEW structures.

4. Internal Drainage System

Install an internal drainage system behind the wall as indicated in the plans or as shown on the approved working drawings. Place outlet pipes at sags in the flow line, low end of the collector pipe, and other locations as shown or specified. Submit the location and elevation of the internal drainage system to the Project Engineer for approval.

5. Geotextile Fabric

For MSEW systems with modular concrete block facings and granular reinforced backfill, place geotextile fabric between the block fill and the reinforced backfill. If a stone reinforced backfill is used, geotextile fabric is not required.

Place geotextile fabric between natural ground and reinforced backfill. Remove all loose or extraneous material and sharp objects from subgrade that may damage the geotextile fabric during installation. Stretch, align, and place geotextile fabric in a wrinkle-free manner in contact with the soil. Overlap adjacent geotextile fabric edges a minimum of 18 inches.

Repair or replace torn or punctured sections of the geotextile fabric as directed by the project engineer. When repairing geotextile fabric, place a section of fabric that is large enough to cover the damaged area with an overlap of at least 18 inches on all sides.

6. Wall Erection

Place facing elements so that their final position is vertical or battered as shown on the plans. Erect facing elements with a staggered horizontal joint pattern. Place facing elements in successive horizontal lifts in the sequence as directed by the Project Engineer as backfill placement proceeds. Construct MSEW structure using a predetermined backward batter corresponding to the anticipated outward wall deflection as determined by the MSEW system supplier. Adjust batter in the field as directed by the Project Engineer during construction.

If the wall is to interface with another wall that will be constructed after this contract, submit wall interface and embankment compaction details at these locations to the Project Engineer.

As necessary during backfill placement, maintain panels in a vertical position with temporary wooden wedges placed in the joint at the junction of the two adjacent panels on the external side of the wall. Utilize external bracing for the initial lift as required.

Conform to the following tolerances for panel walls:

1. Horizontal and vertical alignment of wall face ± 3/4 inch along any 10-foot distance.
2. Overall Vertical tolerance (plumb) of wall is not to exceed 1/2 inch per 10 feet of wall height from the final wall batter. Negative (outward batter) batter is not acceptable.
3. Maximum allowable out of plan offset at any panel joint ≤ 1/4 inch.

Conform to the following tolerances for modular block walls:

1. Horizontal and vertical alignment of wall face ± 3/4 inch along any 10-foot distance.
2. Overall Vertical tolerance (plumb) of wall is not to exceed 1 inch per 10 feet of wall height from the final wall batter. Negative (outward batter) batter is not acceptable.
3. Maximum horizontal gap between erected blocks < 1/4 inch.
4. Shim or grind to control the elevations of any two adjacent blocks within 1/16 inch.

7. Reinforced Backfill Placement

Place backfill immediately after the erection of each lift of facing elements. Level backfill material to an elevation approximately 1 inch above facing connection before placing each level of soil reinforcement. Avoid damage or disturbance of wall materials when placing backfill. Remove and replace damaged wall materials at no expense to the Department. Assure no voids

exist directly beneath the reinforcing elements during backfill placement near the facing. Compact backfill to 95 percent of its maximum dry density in accordance with Section 203 and DOTD TR 401. Determine optimum moisture content and maximum dry density in accordance with DOTD TR 415 or TR 418. Perform compaction control testing at minimum frequency of one test per every 2 feet of wall height for every 100 lineal feet of wall. Assure a uniform moisture distribution prior to and during compaction of each layer. Place backfill materials at a moisture content less than or equal to the optimum moisture content. Remove and rework backfill material having a moisture content in excess of the optimum until the moisture content is uniformly acceptable throughout the entire lift. Place backfill in 8-inch loose lifts closely following the MSEW facing erection. Decrease lift thickness as necessary to obtain the specified density. Compact backfill without disturbing or distorting the reinforcement. Maintain a minimum of 6 inches of compacted backfill between construction equipment and soil reinforcement or geotextile fabric. Use light mechanical tampers adjacent to the backside of the wall facing, within a 3-foot wide area, to achieved compaction. Do not use Sheep's foot or grid-type rollers for compacting backfill within the reinforced soil zone. Shape the last level of backfill to permit runoff of rainwater away from the wall face at the end of each day's operations. Do not allow surface runoff from adjacent areas to enter the reinforced soil zone until it is protected from infiltration. Repair any damage or movement caused by erosion, sloughing, or saturation of the reinforced backfill or retained backfill repaired at no expense to the Department.

8. Soil Reinforcement Placement

Install soil reinforcement in accordance with the manufacturer's recommendations and these specifications. Place reinforcement within the layers of the compacted backfill material at locations shown on the plans. To prevent damage, place only the amount of soil reinforcement required for immediately pending work. Place reinforcement with the strongest direction perpendicular to the wall face, unless shown otherwise in the plans. Connect reinforcement to MSEW facing in accordance with the MSEW system supplier's recommendations. Place reinforcement flat and apply uniform tension to remove any slack in the connection or reinforcement material.

9. Surcharge

When the plans indicate that an earth surcharge be placed over the reinforced zone, retain the surcharge with a temporary wall. Construct temporary wall with MSEW or other approved method, as accepted by the Project Engineer, at no direct cost to the Department. Place temporary wall

within one foot of permanent wall face. Slope the top surface of the surcharge to allow surface water to drain away from wall. Place a plastic membrane over reinforced zone prior to placing surcharge material. Include materials, placement, removal of the temporary wall, and surcharged materials in the cost of the permanent wall unless indicated otherwise on the plans.

10. Abutment Piling

Adhere to the following requirements and sequence if abutments supported on piling are to be placed in the reinforced zone.

1. Drive all piles within the reinforced zone prior to MSEW installation.
2. Encase each pile in a Smooth Wall Corrugated Galvanized Steel (SWCGS) pipe of sufficient thickness in accordance with AASHTO M 36 to prevent buckling or distortion during placement and compaction of wall backfill. Include this expense in the cost of the wall.
3. Place spacers between the pile and SWCGS pipe to prevent the pipe from coming in contact with the pile during backfilling of the wall.
4. Extend SWCGS pipe from bottom of backfill to bottom of bridge abutment cap.
5. After positioning, seal the top of the SWCGS pipe to prevent debris accumulation during placement of backfill, and keep pipe sealed until filled with granular material.
6. Fill SWCGS pipe loosely with granular material after completion of wall construction as directed and accepted by the Project Engineer.

11. MSEW Structural Excavation and Backfill

Excavate and backfill below the original ground line to facilitate the placement of the reinforced backfill for the MSEW. Furnish and subsequently remove any temporary retaining systems and dewatering systems necessary for execution of the work, and dispose of all excavated materials below the original ground elevation to the final grading line in accordance with plan details and these specifications.

802.06 MEASUREMENT.

802.06.1 Structural Excavation: When a pay item is not provided, excavation will not be measured for payment.

Structural excavation will be measured per cubic yard, based on plan dimensions plus excavation allowance. The excavation allowance is 18 inches outside the neat line of the vertical planes of the footing.

Backfill and disposal of excess excavated material will not be measured for payment.

802.06.1.1 Reinforced Concrete Box Culverts: Excavation and backfill required for box culvert construction will not be measured for payment, except as specified in 203.14.1.

802.06.1.2 Cofferdams: When the Contract does not contain an item for "Cofferdams," the cofferdams and cribs will not be measured for payment.

When an item for "Cofferdams" is included in the Contract, the cofferdams will be measured on a lump sum basis and conform to Section 817, "Temporary Works."

802.06.2 Water Control System: When the Contract does not contain an item for "Water Control System," use an accepted method to control seepage and runoff. The "Water Control System" will not be measured for payment.

When an item for "Water Control System" is included in the Contract, the water control system will be measured on a lump sum basis and shall conform to Section 817, "Temporary Works."

802.06.3 Sheeting: Permanent sheeting will be measured based on the design quantities shown on the plans per square foot.

Temporary sheeting will be measured for payment based on the design shown on the plans per square foot.

Contractor sheeting will not be measured for payment.

Jetting or pre-boring of sheeting will not be measured for payment.

802.06.4 Mechanically Stabilized Earth Wall: Mechanically Stabilized Earth Walls, designed, furnished, installed and accepted, will be measured by plan quantity per square foot of facing, as adjusted for field conditions.

Embankment or reinforced backfill material will be measured per cubic yard as embankment under Section 203.

802.06.5 MSEW Structural Excavation and Backfill: MSEW Structural Excavation and Backfill will be measured on a lump sum basis.

802.07 PAYMENT. Payment for structural excavation, backfill, disposal of excess excavated material, installation and/or removal of sheeting, and earth retaining structures will be made at the contract unit prices which includes all materials, labor, and equipment necessary to complete this item in accordance with the Contract.

802.07.1 Structural Excavation: Payment for structural excavation will be made at the contract unit price per cubic yard which includes required

excavation and backfill, installation and removal of contractor sheeting, and disposal of excess excavated material.

When the required excavation depth is in excess of that specified, payment for the additional excavation required will be made in accordance with Table 802-4.

Table 802-4
Payment for Additional Excavation

Depth of Foundation Excavation Below Specified Elevation (Feet)	Percent of Contract Unit Price for the Excavation Item
0 to 2.0	100
2.1 to 4.0	125
4.1 to 6.0	150
6.1 to 8.0	175
8.1 to 10.0	200
Over 10.0	Extra Work

802.07.2 Sheeting: Payment for permanent and temporary sheeting will be made at the contract unit prices.

802.07.3 Mechanically Stabilized Earth Wall (MSEW): Permanent and temporary MSEW will be paid for at the contract unit price per square foot which includes furnishing design, materials, labor, equipment, and other incidentals required to complete this item. Payment will include, but will not be limited to: modular concrete facing blocks, precast concrete panels, galvanized steel reinforcing and tie strips or galvanized steel mesh and mesh connectors or geosynthetic reinforcement, geotextile fabric, level up concrete, coping, leveling pad, internal and external drainage and dewatering systems, temporary retaining systems, temporary surcharge wall, special backfill material requirements, and removal of temporary items.

Embankment or reinforced backfill material will be paid for as embankment under Section 203. Additional cost associated with its special material requirements will be included in the MSEW item.

802.07.4 MSEW Structural Excavation and Backfill: Excavation below the original ground line and subsequent backfill to the original ground line required for the construction of the MSEW structure will be paid for at the contract lump sum price, which includes all materials, labor, equipment, and other incidentals required for completion of this work. Payment will include, but not be limited to, furnishing and subsequently removing any temporary retaining systems and dewatering systems necessary for execution of the work, and disposal of all excavated materials below the original ground elevation to the final grading line. If no pay item for MSEW structural excavation and backfill is included in the contract, payment will be incidental to the MSEW.

Payment will be made under:

Item No.	Pay Item	Pay Unit
802-01	Structural Excavation (Type)	Cubic Yard
802-02	Permanent Sheeting (Type)	Square Foot
802-03	Temporary Sheeting (Type)	Square Foot
802-04	Mechanically Stabilized Earth Wall	Square Foot
802-05	MSEW Structural Excavation and Backfill	Lump Sum

Section 803
Drilled Shafts

803.01 DESCRIPTION. Furnish and install drilled shafts of the specified type, dimensions, locations, elevations, integrity, and resistance.

803.02 MATERIALS. Comply with the following sections and subsections:

Slurry	803.02
Portland Cement Concrete	901
Granular Material	1003.09
Cold Tar Epoxy Polyamide Paint	1008.04
Reinforcing Steel	1009.01
Concrete Admixtures	1011.02
Permanent Steel Casing	1013.11

803.02.1 Concrete

Use Class S concrete conforming to Section 901 and with the following slump requirements:

Dry placement methods:	5 – 7 inches
Casing removal methods:	8 – 10 inches
Tremie placement methods:	8 – 10 inches

Slump loss of more than 4 inches shall not be permitted during the period equal to the anticipated placement period plus two hours. Slump life may be extended through use of retarders and mid-range water reducers.

803.02.2 Steel Casing: Casing shall be of ample strength to resist damage and deformation from transportation and handling, installation and extraction stresses, and all pressures and forces acting on the casing. Casing shall be watertight and clean prior to placement in the excavation.

803.02.2.1 Permanent Casing: Use steel conforming to ASTM A36 or ASTM A252 Grade 2 unless specified otherwise on the plans. Corrugated casing is not allowed. All splicing of permanent structural casing shall be in accordance with Section 6 of the *LRFD Bridge Design Specifications,* latest edition.The inside diameter of permanent casing shall be as shown on the plans unless a larger diameter is approved by the engineer, at no additional cost to the Department.

803.02.2.2 Temporary Casing: Use smooth wall structural steel casing. The casing shall be capable of being removed without deformation and damaging the completed shaft, and without disturbing the surrounding soil. The inside diameter of temporary casing shall not be less than the specified diameter of the shaft.

803.02.3 Mineral Slurry: Use mineral slurry in conformance with the Drilled Shaft Installation Plan. Conform to Table 803-1.

Table 803-1
Mineral Slurry Requirements

Property	Test	Requirement
Density (pcf)	Mud Weight (Density) API 13B-1, Section 1[1]	64.3[2] to 72.0[2]
Viscosity (seconds/quart)	Marsh Funnel and Cup API 13b-1, Section 2.2[1]	28.0 to 50.0
pH	Glass Electrode, pH Meter, or pH Paper	8.0 to 11.0
Sand Content (percent) immediately prior to placing concrete	API 13B-1, Section 5	4.0 max

[1] American Petroleum Institute (API)

[2] When approved by the engineer, slurry may be used in salt water, and allowable densities may be increased by up to 2 pcf. Slurry temperature shall not be less than 40°F when tested.

803.02.4 Polymer Slurry: Use polymer slurry, either natural or synthetic, in conformance with manufacturer recommendations and the Drilled Shaft Installation Plan. Slurry temperature shall not be less than 40°F when tested. Conform to Table 803-2.

Table 803-2
Polymer Slurry Requirements

Property	Test	Requirement
Density (pcf)	Mud Weight (Density) API 13B-1, Section 1 [1]	64.0 pcf; max [2]
Viscosity (seconds/quart)	Marsh Funnel and Cup API 13b-1, Section 2.2	32.0 to 135.0
pH	Glass Electrode, pH Meter, or pH Paper	8.0 to 11.5
Sand Content (percent) immediately prior to placing concrete	API 13B-1, Section 5	1.0 max

[1] American Petroleum Institute (API).
[2] When approved by the engineer, polymer slurry may be used in salt water, and the allowable densities may be increased by up to 2 pcf. Slurry temperature shall not be less than 40°F when tested.

803.02.5 Water Slurry: Water may be used as slurry when using casing for the entire length of the drilled hole, provided that the method of drilled shaft installation maintains stability at the bottom of the shaft excavation. Conform to Table 803-3**.**

Table 803-3
Water Slurry Requirements

Property	Test	Requirement
Density (pcf)	Mud Weight (Density) API 13B-1, Section 1[1]	64.0 pcf max
Sand Content (percent) immediately prior to placing concrete	API 13B-1, Section 5	1.0 max

[1] American Petroleum Institute (API)

803.02.6 Access Tubes for Crosshole Sonic Testing: Access tubes for Crosshole Sonic Log (CSL) testing shall be steel pipe of 0.145-inch minimum wall thickness and 1.5-inches minimum inside diameter. The access tubes shall have a round, regular inside diameter free of defects and obstructions, including all pipe joints, in order to permit the free, unobstructed passage of 1.3-inch maximum diameter source and receiver probes used for the crosshole sonic log tests. The access tubes shall be watertight, free from

corrosion, with clean internal and external faces to ensure passage of the probes and good bond between the concrete and the access tubes. The access tubes shall be fitted with watertight threaded or welded end caps on the bottom and threaded end caps on the top.

Access tubes that may be used for remediation purposes shall be adequately sized to accommodate grout pressures required for base grouting methods.

803.02.7 Grout: Grout for filling CSL access tubes and voids created after loading the bi-directional load cells shall be a non-shrink neat cement grout with a minimum water/cement ratio of 0.45 and strength no less than that of the shaft concrete and be in accordance with Section 1018.04.

803.03 SUBMITTALS. Conform to Section 801. Provide submittals as required by the Contract.

Do not begin work until the Project Reference, Drilled Shaft Installation Plan, and the Experience and Personnel submittal acceptance.

803.03.1 Project Reference: At least four weeks prior to the start of drilled shaft construction, submit four copies of a project reference list to the engineer for acceptance, verifying the successful completion by the drilled shaft contractor of at least three separate foundation projects within the last five years with drilled shafts of similar size (diameter and depth) and difficulty to those shown on the plans, and with similar subsurface geotechnical conditions. Include a brief description of each project, the owner's contact person's name, and current phone number for each project listed.

803.03.2 Drilled Shaft Installation Plan: At least four weeks prior to the start of drilled shaft construction, submit to the engineer four copies of the Drilled Shaft Installation Plan. Reference the available subsurface geotechnical data provided in the contract boring logs and any geotechnical reports prepared for this project. Provide at a minimum the following information:

1. Description of overall construction operation sequence and the sequence of drilled shaft construction when in groups or lines.

2. A list, description, and capacities of proposed equipment, including but not limited to cranes, drills, augers, bailing buckets, final cleaning equipment and drilling unit. As appropriate, describe why the equipment was selected, and describe equipment suitability to the anticipated site and subsurface conditions. Include a project history of the drilling equipment

demonstrating its successful use on shafts of equal or greater size in similar subsurface geotechnical conditions.

3. Details of drilled shaft excavation methods, including proposed drilling methods, methods for cleanout of the bottom of the excavation hole, and a disposal plan for excavated material and drilling slurry (if applicable). If appropriate, include a review of method suitability to the anticipated site and subsurface geotechnical conditions including obstruction removal techniques, if such are indicated in the contract subsurface geotechnical information or contract documents.

4. Details of the method to be used to ensure drilled shaft excavation stability (i.e., prevention of caving, bottom heave, etc. using permanent casing, temporary casing, rotating or oscillating method, slurry, or other means) during excavation and concrete placement. Include a review of method suitability to the anticipated site and subsurface geotechnical conditions.

5. Detailed procedures for mixing, using, maintaining, and disposing of the slurry. Provide a detailed mix design, including all additives and their specific purpose in the slurry mix, and a discussion of its suitability to the anticipated subsurface geotechnical conditions.

6. Detailed plan for quality control of selected slurry, including tests to be performed, test methods to be used, and minimum and/or maximum property requirements, which must be met to ensure that the slurry functions as intended, considering the subsurface conditions and shaft construction methods, in accordance with the slurry manufacturer's recommendations. As a minimum, include the tests shown in Table 803-4.

Table 803-4
Minimum Slurry Test Requirements

Property	Test Method
Density	Mud Weight (Density) API 13B-1, Section 1
Viscosity (sec/qt)(sec/L)	Marsh Funnel and Cup API 13B-1, Section 2.2
pH	Glass Electrode, pH Meter, or pH Paper
Sand Content	API 13B-1, Section 5

7. When using polymer slurry, slurry technical assistance information consisting of the name and current phone number of the slurry manufacturer's technical representative assigned to the project, the names of personnel assigned to the project and trained by the slurry manufacturer's technical representative in the proper use of the slurry, and a signed training

certification letter from the slurry manufacturer for each individual, including the date of the training.

8. Reinforcing steel assembly and placement drawings, including type and location of all splices, reinforcement cage support/centralization methods, type and location of all spacers, CSL access tubes and other instrumentation, and procedures for lifting and setting the reinforcement cage.

9. When proposing or requiring casings, casing dimensions, detailed procedures for permanent casing installation, temporary casing installation and removal, and methods of advancing the casing along with the means to be utilized for excavating the drilled shaft hole.

10. When using temporary casing, details of the method to extract the temporary casing, maintaining shaft reinforcement in proper alignment and location, and maintaining the concrete slump to keep concrete workable during casing extraction.

11. Details of concrete placement, including proposed equipment and procedures for delivering concrete to drilled shaft, placement of concrete into shaft including initial placement and raising of tremie or pump line during placement, size of tremie and pump lines, and operational procedures for pumping.

12. The method to be used to form a horizontal construction joint during concrete placement.

13. When applicable, a description of the material to be used to temporarily backfill a drilled shaft excavation hole during a stoppage of the excavation operation, as well as the method used to place and remove the material.

14. Details of procedures to prevent loss of slurry or concrete into waterways, sewers, and other areas to be protected.

15. Details of proposed excavation and concrete placement contingency plans, including a list of equipment or materials required.

16. Describe the method and materials that will be used to fill or eliminate all voids below the top of shaft between the plan shaft diameter and excavated shaft diameter, or between the shaft casing and surrounding soil, if permanent casing is specified.

17. Details of any required load tests including equipment, instrumentation, procedures, calibration data for test equipment, calculations, drawings, and identifying engineering consultants necessary to perform the work.

18. Details and procedures for protecting existing structures, utilities, roadways, and other facilities during drilled shaft installation.

19. Other information required by the plans or specified herein.

The engineer will accept or reject the Drilled Shaft Installation Plan submittal within 10 working days after receipt.

Propose any significant updates or modifications to the Drilled Shaft Installation Plan to the engineer and if accepted, modify the plan. The engineer will accept or reject the modified Drilled Shaft Installation Plan submittal within 10 working days after receipt.

803.03.3 Experience and Personnel: The engineer will accept or reject the Experience and Personnel submittal within 10 working days after receipt. Work shall not be started on any drilled shaft until the contractor's experience and field personnel are accepted by the engineer. The engineer may suspend drilled shaft construction if the contractor substitutes field personnel without prior acceptance by the engineer. The contractor shall be fully liable for the additional costs resulting from the suspension of work, and no adjustments in contract time resulting from such suspension of work will be allowed.

803.03.3.1 Supervisors and Drilling Operators: At least two weeks prior to the start of drilled shaft construction, submit to the engineer for acceptance four copies of a list identifying the on-site supervisors and drill rig operators assigned to the project. The list shall contain a detailed summary of each individual's experience in drilled shaft excavation operations, as well as placement of assembled reinforcing cages and concrete in drilled shafts.

On-site supervisors shall have a minimum of two years of experience in supervising construction of drilled shafts for foundations of similar size (diameter and depth) and difficulty as those shown on the plans, and similar geotechnical conditions to those described in the geotechnical borings. The work experience shall consist of direct supervisory responsibility for the on-site drilled shaft construction operations. Project management level positions indirectly supervising on-site drilled shaft construction operations are not acceptable for this experience requirement.

Drill rig operators shall have a minimum of one year experience in construction of drilled shafts.

803.03.3.2 Testing Consultant: Use an experienced independent test organization that has been accepted by the engineer prior to testing. Perform all CSL testing and analyses under the supervision of a registered professional engineer in Louisiana. A minimum of three years of experience in field testing and analyses of CSL test results is required for the consultant.

803.03.4 Shaft Construction Logs: Prepare the following logs documenting each shaft construction activity as follows: Subsurface

Investigation, Casing, Shaft Excavation, Slurry, and Concrete Placement. The logs shall fully document the work performed with reference to the date, time, and casing/excavation elevation. Each log shall be signed by an authorized representative of the contractor and the Department's inspector, and submitted to the engineer within 24 hours of completion of the corresponding activity.

Use standard log forms provided by the Department unless otherwise allowed by the engineer.

803.03.4.1 Subsurface Investigation Log: Include the associated boring log(s) and cone penetrometer test(s) (CPT) nearest the shaft. These logs may be taken from the plans or performed by the contractor.

803.03.4.2 Casing Log: Include at least the following information for temporary or permanent casing:

- Shaft identification number and location;
- Diameter and wall thickness of the casing;
- Dimensions of casing reinforcement;
- Top and bottom elevations of the casing;
- Method and equipment used for casing installation; and
- Any problems encountered during casing installation.

803.03.4.3 Shaft Excavation Log: Include at least the following information:

- Shaft identification number;
- Location and surface elevation of the shaft;
- Description and approximate top and bottom elevation of each soil or rock material encountered;
- Seepage or groundwater conditions;
- Type and dimensions of tools and equipment used, and any changes to the tools and equipment;
- Any problems encountered;
- Elevation of any changes in the shaft diameter;
- Method used for bottom cleaning and shaft bottom inspection; and
- Final bottom elevation of the shaft.

803.03.4.4 Slurry Log: Include at least the following information:

- Shaft identification number;
- Location;
- Type of slurry used;
- Slurry test results; and
- Any problems encountered.

803.03.4.5 Concrete Placement Log: Include at least the following information:

- Concrete mix used;
- Time of start and end of concrete placement;
- Volume and start/end time for each truck load placed;
- Concrete test results;
- Concrete surface elevation and corresponding tremie tip elevation periodically during concrete placement; and
- Concrete yield plot (volume versus concrete elevation, actual and theoretical).

803.03.5 Testing Reports:

803.03.5.1 Integrity Test Report: Provide as one document both the CSL and the Non-destructive Testing (NDT) results, along with all Shaft Construction Logs for the tested shaft. Testing results shall be in accordance with 803.05.11.

803.03.5.2 Load Test Report: Provide as one document the Load Test results, Integrity Test Report(s), and Shaft Construction Logs for the tested shaft. Testing results shall be in accordance with 803.05.12.

803.04 DRILLED SHAFT PRECONSTRUCTION CONFERENCE. At least seven calendar days prior to beginning shaft construction, hold a drilled shaft preconstruction conference to discuss the accepted Drilled Shaft Installation Plan. If using polymer slurry, the frequency of scheduled site visits by the slurry manufacturer's representative will be discussed.

Those attending shall include personnel identified in the Experience and Personnel submittal and the slurry manufacturer's technical representative.

If key personnel change, or if significant revision of the accepted Drilled Shaft Installation Plan is proposed, an additional conference may be required before remaining shaft construction operations are performed.

803.05 CONSTRUCTION REQUIREMENTS.

803.05.1 Drilled Shaft Excavation: Drilling equipment shall have adequate capacity, including power, torque, and down thrust, to excavate the maximum plan diameter to a depth of 20-foot or 20 percent beyond the maximum plan shaft depth, whichever is greater. Excavate to the required depth shown on the plans or as directed by the engineer. Conduct excavation in a continuous operation until completing shaft excavation, except for pauses and stops as noted, using accepted equipment capable of excavating through

the type of material expected. Provide temporary casing at the site in sufficient quantities to meet the needs of the anticipated construction method.

Interruptions for casing splicing and removal of obstructions will be considered as pauses and will be allowed. Other interruptions will be considered stops. In all instances, protect the excavation against sidewall instability.

If using slurry to protect shaft excavation, maintain the minimum level of slurry throughout interruptions in shaft excavation operations. Recondition the slurry to the required properties prior to recommencing shaft excavation operations.

Sidewall over-reaming is required when the time for shaft excavation exceeds 36 hours. Shaft excavation time is measured from the beginning of excavation, or excavation below the casing when casing is used, to the start of concrete placement.

Sidewall over-reaming is required when the engineer determines the excavation has softened due to the excavation methods, swelled due to delays in the start of concrete placement, or degraded because of slurry cake buildup.

Sidewall over-reaming and extending the excavation is required if slurry is in contact with the bottom 5 feet of the excavation for more than 12 hours. Extend the excavation until undisturbed material is reached.

Over-reaming diameter shall be a minimum of 1 inch and a maximum of 6 inches greater than plan diameter. Over-reaming may be accomplished with a grooving tool, over-reaming bucket, or other equipment accepted by the engineer.

The contractor shall bear all costs associated with sidewall over- reaming, over-drilling, and related additional drilled shaft concrete. Construct drilled shafts after placement of embankment fill unless otherwise shown on the plans. Drilled shafts installed prior to completion of embankment fill shall not be capped until the fill has been placed to the bottom of cap elevation.

803.05.2 Drilled Shaft Excavation Protection Methods: Protect excavation from wall caving and bottom heave. Prevent soil adjacent to the drilled shaft from being disturbed throughout the full length of the shaft. Disturbed soil is defined as soil which its geotechnical properties have been changed from those of the original in-situ soil.

Demonstrate to the satisfaction of the engineer that stable conditions are being maintained. If the engineer determines that stable conditions are not being maintained, immediately take action to stabilize the shaft. Submit a revised Drilled Shaft Installation Plan which addresses the problem and prevents future instability. Do not continue with drilled shaft construction

until the damage which has already occurred has been repaired and the engineer's acceptance of the revised Drilled Shaft Installation Plan has been received.

Protect excavation with one or more of the following methods.

803.05.2.1 Temporary Casing: If casing is adequately sealed into competent soils such that water cannot enter the excavation, excavation may proceed in soils below the water table provided the water level within the casing does not rise or exhibit flow. As the temporary casing is withdrawn, a sufficient head of fluid concrete must be maintained to ensure that water or slurry outside the temporary casing will not breach the column of freshly placed concrete.

Casing extraction shall be at a slow, uniform rate with the pull in line with the shaft axis. Movement of casing shall not deform reinforcing steel cage. The reinforcing steel cage shall meet the tolerances as specified in 803.05.10.

Remove all temporary casing from the excavation as completing concrete placement, unless permission has been received from the engineer to leave specified temporary casing in place.

Drilled shaft casing installed by rotating or oscillating methods shall be equipped with cutting teeth or a cutting shoe. Use of rotating or oscillating casing methods shall be in accordance with the equipment and procedures shown in the accepted Drilled Shaft Installation Plan.

803.05.2.2 Permanent Casing: Drive casing to the specified tip elevation and excavate. Vibratory hammer is not allowed. If tip elevation cannot be reached, excavate and advance casing until reaching the specified tip elevation. After the casing has been filled with concrete, fill all void space between the casing and drilled shaft excavation with a granular material meeting the requirements of 1003.09.

Remove upper portion of permanent casing to the top elevation of the drilled shaft or as specified. For drilled shafts constructed within a permanent body of water, remove upper portion of permanent casing to the low water elevation, unless otherwise specified.

803.05.2.3 Slurry: Maintain stability during drilled shaft excavation and concrete placement operations. Maintain equalized water pressure on the sides and base of the drilled shaft excavation when encountering or anticipating groundwater based on the available subsurface data. If water exists in amounts greater than 3-inches in depth or enters at a rate of more than 12-inches per hour then the drilled shaft excavation must be filled with slurry to at least the level specified in 803.05.2.3.2 and concrete placed by tremie.

803.05.2.3.1 Slurry Technical Assistance: The manufacturer's representative shall provide technical assistance and be present at the site prior to polymer slurry use. The manufacturer's representative shall remain at the site during the construction and completion of a minimum of one drilled shaft to adjust the slurry mix to the specific site conditions.

After the manufacturer's representative is no longer present at the site, the contractor's employee trained in the use of the slurry shall be present at the site throughout the remainder of shaft slurry operations for this project to perform the duties specified above.

803.05.2.3.2 Minimum Level of Slurry in the Excavation: Maintain slurry level in the excavation to obtain hydrostatic equilibrium at a height required to provide and maintain a stable hole, but no less than 5 feet above the water table or surface of surrounding water body.

Maintain slurry level sufficiently above all unstable zones to prevent bottom heave, caving or sloughing of those zones. Provide casing or other means as necessary to meet these requirements.

803.05.2.3.3 Cleaning Slurry: Clean, re-circulate, de-sand, or replace the slurry, as needed, in order to maintain the required slurry properties. Sand content will only be required to be within specified limits immediately prior to concrete placement. Slurry properties outside the specified ranges may result in risks such as unstable holes or lost tools.

803.05.2.3.4 Slurry Sampling, Testing, and Logging: Mineral slurry and polymer slurry shall be mixed and thoroughly hydrated in slurry tanks, lined ponds, or storage areas. Draw sample sets from the slurry storage facility and test the samples for conformance with the appropriate specified material properties before beginning slurry placement in the drilled hole. A sample set shall be composed of samples taken at mid-height and within two feet of the bottom of the storage area.

Sample and test all slurry in the presence of the engineer. The date, time, names of the persons sampling and testing the slurry, and the results of the tests shall be recorded. Submit a copy of the slurry log to the engineer at the completion of each drilled shaft or when requested during the drilling operation.

Take sample sets of all slurry, composed of samples taken at mid-height and within two feet of the bottom of the drilled shaft, and test during drilling as necessary to verify control of slurry properties. As a minimum, take sample sets of slurry and test at least once every four hours after beginning use during each shaft construction.

Take and test sample sets of all slurry immediately prior to placing concrete.

803.05.3 Obstructions: When obstructions are encountered, notify the engineer promptly. An obstruction is defined as a specific object encountered during the drilled shaft excavation operation which prevents or hinders the advance of the drilled shaft excavation. Obstructions include, but are not limited to: logs, man-made objects, and rocks. When efforts to excavate the obstruction result in a significant reduction in the rate of advance, remove or break up the obstruction. If blasting is required, submit a Blasting Plan to the Chief Construction Engineer for review and acceptance. Equipment lost in the excavation will not be considered an obstruction as defined above and shall be promptly removed. Equipment removal and repair of excavation will be at no additional cost or time to the Department.

803.05.4 Protection of Existing Structures: Control operations to prevent damage to existing structures, utilities, roadways, and other facilities. Preventive measures may include selecting construction methods and procedures that will prevent excessive caving of the drilled shaft excavation, monitoring and controlling vibrations from driving of casing, sheeting, or drilling of the shaft.

803.05.5 Drilled Shaft Excavation Inspection: Use appropriate means, such as a cleanout bucket, air lift, or hydraulic pump to clean the bottom of the excavation of all drilled shafts. Limit sediment at excavation base to a maximum of 1.5 inches, with a minimum of 50 percent of the shaft base less than 0.5 inch of sediment just prior to concrete placement.

The drilled shaft excavation will be inspected for acceptance by the engineer prior to proceeding with construction. The bottom of the excavated drilled shaft shall be sounded with an airlift pipe, a tape with a heavy weight attached to the end of the tape, a borehole camera with visual sediment depth measurement gauge, or other means acceptable to the engineer to determine that the drilled shaft bottom meets contract requirements.

803.05.6 Assembly and Placement of Reinforcing Steel: Prior to and during fabrication of the steel reinforcing cage, support reinforcing bars off the ground surface and protect from contamination of mud and other deleterious materials. Rigidly brace reinforcing cage to retain its configuration during handling and construction. Individual or loose bars will not be permitted. All intersections of vertical and horizontal bars must be tied. Show bracing and any extra reinforcing steel required for fabrication of the cage on details submitted with the Drilled Shaft Installation Plan.

Carefully position reinforcement; securely fasten to provide minimum clearances and ensure that no displacement of the reinforcing steel cage occurs during placement of the concrete. The reinforcing steel cage shall meet the tolerances as specified in 803.05.10.

Splicing of the reinforcement cage during placement in the shaft excavation will not be permitted unless shown on the plans or allowed by the engineer. If the reinforcing cage is spliced during placement into the drilled shaft excavation, the splice details and location of the splices shall be in accordance with the plans and the Drilled Shaft Installation Plan.

Securely hold steel reinforcing cage in position throughout the concrete placement operation. Tie and support the reinforcing steel in the drilled shaft so that the location of the reinforcing steel will remain within allowable tolerance. Use concrete spacers or other acceptable non-corrosive spacing devices at sufficient intervals [near the bottom, the top, and at intervals not exceeding 10 feet vertically] to ensure concentric spacing for the entire cage length. The number of spacers required at each level will be one spacer for each foot of excavation diameter, with a minimum of four spacers at each level. The spacers shall be of adequate dimension to ensure an annular space between the outside of the reinforcing cage and the side of the excavation along the entire length of the drilled shaft as shown on the plans. The width of the spacer shall be a minimum of 1.75 inches. Acceptable feet (bottom supports) made of plastic or concrete shall be provided to ensure that the bottom of the cage is maintained at the proper distance above the base of the excavation unless the cage is suspended from a fixed base during concrete placement.

Bracing steel which constricts the interior of the reinforcing cage must be removed after lifting the cage if free fall concrete or tremie methods of concrete placement are to be used.

803.05.7 Assembly and Placement of Access Tubes: Install access tubes meeting the requirements of 803.02.6 for the full depth of all shafts to permit access of CSL testing equipment, except as otherwise noted

herein. If, in the opinion of the engineer, the condition of the drilled shaft excavation permits drilled shaft construction in the dry, the engineer may specify that CSL testing be omitted.

Clear access tubes of all debris before installing. Repair or replace damaged access tubes prior to concrete placement.

The minimum number of access tubes installed shall be as specified in Table 803-5.

Table 803-5
Drilled Shaft Access Tubes for CSL Testing

Shaft Diameter, D (Feet)	Minimum Number of Access Tubes
D ≤ 3.5	3
3.5 < D ≤ 4.5	4
4.5 < D ≤ 5.5	5
5.5 < D ≤ 6.5	6
6.5 < D ≤ 7.5	7
7.5 < D ≤ 8.5	8
8.5 < D ≤ 9.0	9
9.0 < D ≤ 10.0	10
10.0 < D ≤ 11.0	11
11.0 < D ≤ 12.0	12

Fit the tubes with a watertight threaded or welded end cap on the bottom and a removable threaded cap on the top. Use watertight threaded or welded splices. Place the access tubes around the drilled shaft, inside the spiral or hoop reinforcement, and 3-inches clear of the vertical reinforcement, at a uniform spacing measured along the circle passing through the centers of the access tubes. If these minimums cannot be met due to close spacing of the vertical reinforcement, then bundle the access tubes with the vertical reinforcement.

The engineer may allow the tubes to be installed on the outside of the cage if the access tubes have a minimum concrete cover of 3 inches and bumpers are installed on the outside of the cage to prevent tubes from being crushed. Install the tubes in a symmetric pattern with tubes equally spaced around the perimeter of the cage and parallel to the plan axis of the shaft. Fasten the tubes to the reinforcement cage at a maximum of 5-foot intervals or as directed by the engineer. Threaded U-bolts may be used to attach tubes to the rebar cage. Extend the tubes to the shaft bottom and at least 3-foot above the shaft top. If the shaft top is subsurface, extend the tubes at least 3-foot above the ground and water surfaces. Do not damage the tubes during reinforcement

installation operations. Avoid pulling or displacing the cage after concrete has begun to set. Within two hours of concrete placement, fill the access tubes with clean water and cap or seal the tube tops to keep out debris. Water shall remain in the access tubes at all times until all CSL testing for that shaft is complete. Remove caps or plugs from tubes after concrete placement so as not to apply excess torque, hammering, or other stresses which could break the bond between the access tubes and the concrete. The contractor shall be responsible for all delays arising from data quality issues due to improper installation or treatment of the CSL access tubes.

803.05.8 Concrete Placement, Curing, and Protection: Commence concrete placement as soon as possible after completion of drilled shaft excavation and inspection by the engineer. Immediately prior to commencing concrete placement, the drilled shaft excavation and the properties of the slurry (if used) shall conform to 803.02. Continue concrete placement in one operation to the top of the drilled shaft.

Unless approved otherwise by the engineer, the elapsed time from beginning to completion of concrete placement in the drilled shaft shall not exceed two hours for drilled shafts 5-foot in diameter or less. The minimum concrete placement rate for drilled shafts larger than 5-foot in diameter shall be 30 cubic yards per hour.

The engineer may allow an extension of the concrete placement time if the contractor adequately demonstrates by trial mix and slump loss tests that the slump of the concrete will be 4 inches or greater during the entire time of concrete placement during the longer placement time.

If water is not present (a dry shaft), the concrete shall be deposited through the center of the reinforcement cage by a method which prevents segregation of aggregates. If concrete is placed by free fall method, minimum clear opening shall be 24 inches in diameter and use a centering device such that the free-fall is vertical down the center of the drilled shaft without hitting the sides, the steel reinforcing bars, or the steel reinforcing bar cage bracing. Reduce the rate of concrete placement or reduce the height of free fall as directed by the engineer if the concrete strikes the reinforcing cage or sidewall.

The elapsed time for concrete placement shall not exceed the time limit defined in the accepted Drilled Shaft Installation Plan and demonstrated by a successful technique shaft or test shaft. The concrete placement time shall commence at the mixing of the concrete and extend through the completion of placement of the concrete in the drilled shaft excavation, including removal of any temporary casing. For wet placement methods, the placement time shall

start at the batching of the initial load of concrete to be placed in the shaft. Prior to concrete placement, provide test results of both a trial mix and a slump loss test conducted by an accepted testing laboratory using accepted methods to demonstrate that the concrete meets this defined placement time limit. The concrete mix shall exhibit slump values and limitations conforming to 803.02.1. The trial mix and slump loss tests shall be conducted at ambient temperatures appropriate for site conditions. Ambient temperature at the time of concrete placement will not be greater than the ambient temperature at the time of the concrete trial mix and slump loss test.

Admixtures such as midrange water reducers, plasticizers, and retarders may be used and shall conform to 1011.02 and be included in the concrete mix design and detailed in the Drilled Shaft Installation Plan. After accepting for use, adjust all admixtures for the conditions encountered on the job so the concrete remains in a workable plastic state throughout the defined placement time limit.

Throughout concrete placement operations, the discharge end of the tremie shall remain submerged in the concrete at least 5 foot and the tremie shall always contain enough concrete to prevent water from entering. The concrete placement shall be continuous until work completion, resulting in a seamless, uniform shaft. If the concrete placement operation is interrupted, the engineer may require core drilling or other tests to verify that the drilled shaft contains no voids or horizontal joints. If testing reveals voids or joints, repair them or replace the drilled shaft at no expense to the Department.

Before placing fresh concrete against concrete deposited in water or slurry (construction joint), remove all scum, laitance, loose gravel, and sediment on the surface of the previously placed concrete.

Complete a concrete yield plot for each wet shaft poured by tremie methods. Submit this yield plot to the engineer in accordance with 803.03.4. Casing installations or drilled shaft excavations are not to be performed within a clear distance of three diameters of a newly poured shaft within 24 hours of concrete placement and only after the concrete has reached a minimum compressive strength of 1800 psi.

803.05.9 Tremies: A gravity tremie shall have a hopper at the top that empties into a watertight tube at least 10 inches in diameter. If using a concrete pump in lieu of the tremie, use a watertight rigid pump line with a minimum diameter of 5 inches and all requirements specified herein apply.

Mark tremie clearly at one foot increments. The discharge end of the tremie tube shall include a device to seal out water while the tube is first filled with concrete. In lieu of a seal at the discharge end of the pipe, a “plug” or

"pig" may be placed in the hopper prior to concrete placement which moves through the tremie when pushed by the concrete, forcing water or slurry from the tremie pipe. A plug or pig is a flexible device which fills the entire cross section of the tremie tube and creates an impermeable separation between the concrete in the tremie and the slurry. When placing a plug or pig at the top of the tremie it shall be inserted after the tremie is placed in the wet excavation and before charging the tremie with concrete. The bottom of the tremie shall be placed slightly off the bottom of the excavation to allow the plug or pig to pass out of the tremie.

The hopper and tubes shall not contain aluminum parts that will have contact with the concrete. The inside and outside surfaces of the tubes shall be clean and smooth to allow both flow of concrete and the unimpeded withdrawal of the tube during concrete placement.

803.05.10 Drilled Shaft Construction Tolerances: Construct shaft excavations so that the top center of the poured shaft with respect to the plan location is within the horizontal tolerances shown in Table 803-6.

Table 803-6
Horizontal Tolerances

Shaft Diameter, D (Feet)	Tolerance (Inches)
Multi Shaft Foundations	—
D ≤ 2	3
2 < D < 5	4
D ≥ 5	6
Single Shaft Column	—
All shaft diameters	3

Drilled shafts in soil shall be within 1.5 percent of plumb. Plumbness will be measured from the top of poured shaft elevation or mudline, whichever is lower.

During excavation of the shaft, make frequent checks on the plumbness, alignment, and dimensions of the shaft. Correct any deviation exceeding the allowable tolerances with a procedure accepted by the engineer.

Check elevation of the top of the steel cage before and after placing concrete. If the upward displacement of the reinforcing cage exceeds 2 inches, or if the downward displacement exceeds 6 inches, the drilled shaft will be considered defective. Make corrections to the satisfaction of the engineer. No additional drilled shafts shall be constructed until the contractor

has modified the reinforcing cage support in a manner satisfactory to the engineer.

When the shaft reinforcing cage for a single column is to be tied directly to the column steel, the reinforcing cage shall be concentric with the drilled shaft excavation within a horizontal tolerance of 0.5 inch. On all other shafts, the reinforcing cage shall be concentric with the drilled shaft excavation within a horizontal tolerance of 1.5 inches.

The top elevation of the completed drilled shaft shall have a tolerance of plus or minus 2 inches.

Tolerances for casings shall be in accordance with American Pipe Institute tolerances applicable to regular steel pipe.

Drilled shaft excavations and completed shafts not constructed within the required tolerances will be considered defective. Correct all defective shafts to the satisfaction of the engineer. Materials and work necessary, including engineering analysis and redesign, to complete corrections for out-of-tolerance shafts shall be furnished without either cost or time to the Department. Redesign drawings and computations shall be sealed and signed by a registered Professional Engineer licensed in Louisiana.

803.05.11 Integrity Testing:

803.05.11.1 Crosshole Sonic Log Testing: Use Crosshole Sonic Log (CSL) testing to aid in identifying anomalies in shaft concrete by measuring ultrasonic pulse travel time from a signal source in one access tube to a receiver in another access tube. CSL testing will be used to determine integrity acceptance of the shaft.

803.05.11.1.1 Testing Schedule: Perform testing after shaft concrete has cured at least 48 hours. Additional curing time prior to testing may be required if the shaft concrete contains admixtures, such as set retarding admixture or water reducing admixture. The additional curing time prior to testing required under these circumstances shall not be grounds for additional compensation or extension of contract time. No subsequent construction shall be performed on the completed shaft until shaft acceptance by the engineer.

Complete CSL tests for technique shafts and test shafts within five calendar days of concrete placement.

Complete CSL tests for production shafts within 20 calendar days of concrete placement.

During the development of the CSL testing schedule, consider the CSL testing time constraints and the shaft production schedule.

803.05.11.1.2 Testing Equipment: The CSL test equipment shall be capable of performing the following functions and conform to ASTM D6760:

- Displaying individual CSL records, recording CSL data, and analyzing receiver responses.
- Printing of CSL logs.
- Testing in 1.5 inch minimum I.D. access tubes.
- Generating an ultrasonic voltage pulse to excite the source with a synchronized triggering system to start the recording system.
- Measuring and recording the depths of CSL probes at the time signals are recorded.
- Filtering/amplifying signals.

803.05.11.1.3 Testing Procedures: Use the submitted and accepted testing consultant to perform CSL testing. Provide testing consultant with the shaft construction logs. Use CSL testing on all production shafts, technique shafts, and test shafts when any of the following conditions occur: placing shaft concrete through slurry; using full-length casing; or, as required by the engineer.

Prior to performing CSL testing operations, remove concrete at the top of the drilled shaft down to sound concrete.

Inspect access tubes after placing shaft concrete and before beginning the CSL testing. Each access tube that the test probe cannot pass through shall be replaced at no additional cost to the Department with a 2-inch diameter hole cored through the concrete for the entire length of the shaft. Unless directed otherwise by the engineer, cored holes shall be located approximately 6-inches inside the drilled shaft reinforcement and shall not damage the reinforcement. Descriptions of inclusions and voids in cored holes shall be logged and a copy of the log shall be submitted to the engineer. Findings from cored holes shall be preserved, identified as to location, and made available for inspection by the engineer.

As a minimum, test all perimeter tube pairs and major diagonal tube pairs. If a possible defect is found, conduct CSL testing between additional pairs of tubes as determined by the testing consultant. No welding shall take place in the general vicinity during CSL testing operations.

Perform CSL tests with the source and receiver probes in the same horizontal plane unless test results indicate potential defects in which case the questionable zone may be further evaluated with angled tests consisting of the source and receiver vertically offset in the access tubes. Make CSL

measurements at 2-inch depth intervals. Starting from the bottom of the tubes, pull the probes simultaneously over a depth measuring device.

803.05.11.2 Non-destructive Testing: Non-destructive testing, other than CSL, shall be performed in accordance with the plans and specifications.

803.05.11.3 Reporting Results: Submit Integrity Test results to the engineer for preliminary review and comment within seven calendar days after the Integrity Test.

The final Integrity Test results shall be sealed, signed, and dated by a Professional Engineer licensed in Louisiana prior to inclusion in the Integrity Test Report. Submit the final Integrity Test Report in accordance with 803.03.5 to the engineer within 21 calendar days after completion of Integrity Test.

803.05.11.3.1 CSL Test Results: Test results shall contain at least the following:

- Project name and number;
- Shaft identification number and location;
- Date of testing;
- Description of shaft installation and/or construction methods;
- Description of the shaft details, dimensions, elevations, areas, materials, shaft age at time of CSL testing (days from concrete placement to CSL testing), etc;
- CSL logs for each tube pair tested with analyses of the initial pulse arrival time versus depth and pulse energy/amplitude versus depth;
- Waterfall diagrams;
- All measurements used to compute the sensor elevations in the tubes relative to the shaft;
- CSL tube numbers tested, test length, average compression velocity, and a description of anomalies detected. Include with each CSL anomaly description the CSL tube number, depth below top of concrete, percent concrete wave speed reduction, and recommended concrete condition rating;
- CSL logs for each tube pair tested with any defect zones indicated on the logs and discuss in the test report as appropriate;
- Discussion of test results and recommendations. Include shaft construction log information, as it affects test results and recommendations;
- Results and output of any analyses inherent to the test method;
- Electronic data files if applicable; and,

- All additional pertinent information.

803.05.11.3.2 Non-Destructive Test Results: Test results shall contain at least the following:

- Project name and number;
- Shaft identification number and location;
- Date of testing;
- Description of shaft installation and/or construction methods;
- Description of the shaft details, dimensions, elevations, areas, materials, etc;
- Instrumentation, test procedures, and data collection;
- Discussion of test results and recommendations. Include shaft construction log information as it affects test results and recommendations;
- Results and output of any analyses inherent to the test method;
- Electronic data files if applicable; and,
- All additional pertinent information.

803.05.12 Load Test: Install test shafts to the same dimensions, details, and elevations shown on the plans; install using the same equipment and installation procedures proposed for installation of the production drilled shafts.

If the equipment or procedures change following the completion of load testing, install additional test shafts and conduct additional load tests as directed by the engineer at no additional cost to the Department.

All load testing shall be completed and the results evaluated by the engineer before installing any production drilled shafts.

803.05.12.1 Test Shaft: Test shafts are shafts constructed in advance of permanent shafts for purposes of determining shaft length by load testing. Test shafts shall be long enough to be drilled, if necessary, to 15 foot below the plan tip elevation of the nearest permanent shaft. Test shaft length shall be long enough to allow for all testing to be performed.

803.05.12.2 Static Load Test: Static load tests shall be performed in accordance with the procedures specified in ASTM D1143, Procedure A: Quick Test, with the following exceptions:

Apply the load in 20 equal increments or as directed. Hold each load increment for a period of five minutes. Load test shaft to failure or until reaching the specified maximum test load shown on the plans. The test shaft will be considered to have failed when continuous jacking is required and continuous shaft movement is measured. Unless otherwise directed, maintain load until the gross settlement has reached 5 percent of the maximum shaft

diameter. After the plunging load and failure deformation have been achieved, allow the loading system to equalize until shaft movement and variations in jack pressure have ceased.

Remove load in decrements of approximately 20 percent of the maximum load placed on the test shaft. Record gross settlement and load readings five minutes after reaching each unloading load decrement. Record the final recovery of the unloaded test shaft until movement is essentially complete for a period up to 30 minutes.

803.05.12.2.1 Hydraulic Jack: Calibrate the entire hydraulic system for all stages of loading and unloading through an accepted independent calibration service. Furnish a certified laboratory report of the calibration tests to the engineer. Perform calibration no more than 30 days prior to load test commencement. After the system is calibrated, no replacement parts will be permitted (except the pump) without recalibration of the system.

803.05.12.2.2 Displacement Instrumentation: Furnish instrumentation to monitor the gross displacement readings at the shaft head during load testing. The instrumentation shall consist of three independent dial or electronic readout gauges capable of measuring displacement to a precision of ±0.001 inch, with a minimum travel range of 4 inches or 15 percent of maximum shaft diameter, whichever is greater. Provide smooth bearing surfaces perpendicular to the direction of the gauge stem travel for each gauge.

803.05.12.3 High-Strain Dynamic and Force Pulse (Rapid) Load Tests: High-Strain Dynamic tests shall be performed in accordance with the procedures specified in ASTM D4945. The High-Strain Dynamic load test is imposed by the impact of a falling mass which typically has a weight of 1 to 2 percent of the maximum test load.

Force Pulse (Rapid) tests shall be performed in accordance with the procedures specified in ASTM D7383. Two alternative procedures are provided: Procedure A uses a combustion gas pressure apparatus to produce the required axial compressive force pulse. Procedure B uses a cushioned drop mass apparatus to produce the required axial compressive force pulse. Either procedure will be acceptable.

803.05.12.3.1 Preparation: Notify the engineering consultant of the requirement for a load test at least 30 days in advance of each test. Perform site and shaft preparation without damaging the instrumentation or cables. Cut and/or clean the surface of the shaft down to design or test elevation. The top of the shaft shall be smooth and level.

803.05.12.3.2 Procedure: Perform load testing on cast-in-place shafts no sooner than seven days after completion, or once the shaft has achieved the design concrete compressive strength as determined by cylinder compression tests. Complete load test by applying one or more loading cycles to mobilize shaft ultimate resistance or until a load equal to or in excess of the required nominal resistance is reached.

803.05.12.4 Bi-Directional Load Cell Test: Install load cells and load test instrumentation in accordance with the bi-directional load cell supplier recommendations, instructions, and procedure manuals, as accepted by the engineer.

The bi-directional load cells shall be capable of expanding to not less than 6 inches while maintaining the applied test load.

Coordinate with the load cell supplier to determine and/or verify all required equipment, materials, quantities, procedures, and all other applicable items necessary to complete the load testing shown on the plans.

Furnish an acceptable pressurized gas source, a hydraulic pump, hydraulic lines, calibrated hydraulic gauge, and all other equipment and material necessary for performing the load tests. Furnish fresh potable water from an accepted source to form the hydraulic fluid used to pressurize the bi-directional load cells.

Furnish, install, and monitor vibrating wire strain gauges as shown on the plans. Place the strain gauges in pairs on opposite sides of the reinforcing cage at the elevations shown on the plans.

Attach two Linear Variable Differential Transformer (LVDT) vibrating wire displacement gauges to each load cell to monitor the expansion and contraction of the load cell. In addition, mount two LVDT gauges on an independent reference beam and set on opposite sides of the top of the test shaft to monitor axial shaft displacement.

Set two telltale rods on the top of each load cell to monitor the displacement of the top of the load cell. The telltale shall consist of a 0.375-inch diameter stainless steel rod, greased for reducing friction and corrosion, and placed inside a constant 0.75-inch inside diameter pipe. Individual sections of telltales shall be joint coupled flush so that each rod is of uniform diameter throughout its length.

Furnish a portable computer and electronic logging equipment to simultaneously monitor all instrumentation at time intervals designated by the engineer.

Assemble the load cells, piping, and other attachments and make ready for installation in accordance with the requirements of the bi- directional load cell supplier and the following:

Weld steel top and bottom bearing plates to the load cells. Provide holes through the bearing plates, as appropriate, to facilitate placement of tremie concrete;

Coat the upper surface of the bottom steel bearing plate with grease prior to installation into the shaft, to prevent concrete bonding with the bottom plate;

Attach the load cells and plate assembly to the reinforcement cage. Securely fasten all hydraulic hoses, telltale casing, slip joints, etc. to the reinforcing cage. Prior to installation into the drilled shaft excavation, protect the top of piping to keep dirt, concrete or other deleterious materials from entering the piping; and,

Limit deflection of the cage to a maximum of 2 feet between pick points while lifting the cage from the horizontal position to vertical. Provide additional support, bracing, strong backs, etc. to maintain deflection within the specified limit.

For each load test, place the load in increments of 5 percent of the estimated maximum test load shown on the plans, or until the nominal resistance load, as indicated by the instruments, is approached, or to the maximum capacity of the load cell, whichever occurs first. Unless the maximum capacity of the load cell has been reached, apply increments of 2.5 percent of the estimated maximum test load until the limiting load is attained, or the drilled shaft top displacement reaches 2 inches, or to the maximum extension of the load cell;

When the load cell will be used for a subsequent loading stage, the engineer may interrupt the loading sequence at a load cell opening of approximately 3 inches, or less. Maintain each load increment for a minimum period of five minutes, with complete sets of readings obtained and recorded from all gauges and instruments at one, two, and five minutes after application of the load increment. Apply each increment of load within the minimum length of time practical and take instrument system readings immediately. It is intended that the addition of a load increment and the completion of the instrument system readings shall be completed within 5 to 15 minutes. The engineer may elect to hold the maximum applied load for up to one hour. The load shall be removed in decrements of about 10 percent of the maximum test load. Remove each decrement of load within the minimum length of time practical and take instrument system readings immediately. It is intended that the removal of a load decrement and the completion of the instrument system

readings shall be completed within 5 to 15 minutes. The engineer may also require a reloading cycle of ten loading increments and five unloading decrements. Record final recovery of the drilled shaft for a period up to one hour after the last unload interval.

After completion of the load test to the satisfaction of the engineer, and when authorized in writing by the engineer, flush all hydraulic fluid from the bi-directional load cells and hydraulic lines, and replace with a non-shrink neat grout in accordance with the accepted Drilled Shaft Installation Plan and 803.02.7. Grout all voids remaining outside the load cells after completion of the load test, in accordance with 803.02.7.

803.05.12.5 Reporting Results: Submit load test results to the Engineer for preliminary review and comment within four working days after the load test.

The final load test results shall be sealed, signed, and dated by a Professional Engineer licensed in Louisiana prior to inclusion in the Load Test Report. Submit to the engineer the final Load Test Report within 21 calendar days after completion of load test, in accordance with 803.03.5.

803.05.12.5.1 Static Load Test: Load test results shall contain at least the following:

- Project name and number;
- Test shaft identification number and location;
- Date of testing;
- Description of installation and/or construction methods;
- Description of the test shaft details, dimensions, elevations, areas, weights, etc;
- Instrumentation, test procedures, and data collection;
- Discussion of test results and recommendations;
- Results and output of any analyses inherent to the test method;
- Top of shaft load vs. deflection curve for each test;
- Nominal resistance of shaft;
- Electronic data files, if applicable; and,
- All additional pertinent information.

803.05.12.5.2 High-Strain Dynamic and Force Pulse (Rapid) Load Tests: Load test results shall contain at least the following:

- Project name and number;
- Test shaft identification number and location;
- Date of testing;
- Description of installation and/or construction methods;

- Description of the test shaft details, dimensions, elevations, areas, weights, etc;
- Instrumentation, test procedures, and data collection;
- Discussion of test results and recommendations;
- Results and output of any analyses inherent to the test method;
- Top of shaft load vs. deflection curve for each test;
- Nominal resistance of shaft;
- Electronic data files (PDA.W01 format; others if applicable); and,
- All additional pertinent information.

803.05.12.5.3 Bi-Directional Load Cell Test: Load test results shall contain at least the following:

- Project name and number;
- Test shaft identification number and location;
- Date of testing;
- Description of installation and/or construction methods;
- Description of the test shaft details, dimensions, elevations, areas, weights, etc;
- Instrumentation, test procedures, and data collection;
- Discussion of test results and recommendations;
- Tables presenting all instrumentation data;
- Plots of load versus displacement (up and down) for each load cell level and for each stage of the test;
- Plots of load along the length of the drilled shaft determined from the strain gauge data for at least 20 applied load increments;
- Summary of unit side resistance along the length of the drilled shaft and end bearing resistance;
- Plots of creep displacement for each load increment;
- Plot of equivalent top-of-shaft displacement for the test shaft, developed from the load test data; and,
- All additional pertinent information.

803.05.13 Loading Permanent Shaft: When loading a permanent shaft, conduct the loading in accordance with the procedure given in 803.05.12, except the test load shall be as directed by the engineer.

803.05.14 Technique Shaft: Demonstrate the adequacy of methods, techniques, and equipment by successfully constructing a technique shaft in accordance with the requirements. Position the technique shaft at location shown on the plans, but no less than a clear distance of three drilled shaft diameters from the closest production shaft. Construct the technique shaft to the maximum diameter and maximum depth of any production drilled shaft

shown on the plans. Reinforce the technique shaft with the same reinforcement as the corresponding size production shaft. Complete the technique shaft and obtain acceptance by the engineer prior to initiating installation of the load test shafts and production drilled shafts. Failure to demonstrate to the engineer the adequacy of methods and equipment shall be reason for the engineer to require alterations in equipment and/or method to eliminate unsatisfactory results. Any additional technique shaft requiring demonstration of the adequacy of altered methods or construction equipment will be at no additional cost to the Department. Once acceptance has been given by the engineer to construct production drilled shafts, no changes will be permitted in the methods or equipment used to construct the satisfactory technique shaft without the written acceptance of the engineer, which may require additional technique shafts or load tests.

The technique shaft will be used by the engineer to determine if the contractor can: control dimensions and alignment of excavations within tolerance; install casing and remove temporary casing; seal the casing into impervious materials; control the size of the excavation under caving conditions by the use of a mineral, polymer slurry, or by other means; properly clean the completed drilled shaft excavation; construct drilled shafts in open water areas; handle and install reinforcing cages; satisfactorily place concrete meeting the specifications within the prescribed time limit; and sSatisfactorily execute any other necessary construction operation.

Cut off technique shaft as directed by the engineer, but no less than 2 foot below finished grade and leave in place after receiving written authorization from the engineer. For navigable waterways comply with 107.09. For other waterways, remove shaft to 2 foot below mudline or as directed.

803.05.15 Evaluation and Shaft Acceptance: Drilled shaft construction may continue prior to acceptance of the previous shaft if, in the opinion of the engineer, the contractor is constructing the shafts in accordance with the Drilled Shaft Installation Plan and the construction methods are satisfactory.

The engineer will evaluate the Integrity Test Reports and determine whether the drilled shaft construction method produces acceptable shafts. Allow five working days for the evaluation to be conducted after receipt of an acceptable Integrity Test report. Integrity testing should indicate the presence of irregularities such as poor quality concrete, voids, honeycombs, and soil intrusions. Report all defects indicated by the testing to the engineer and conduct further tests as required to evaluate the extent of such defects. Conduct additional CSL measurements between all tube pair combinations in

any drilled shafts that have velocity reductions greater than 20 percent. Provide CSL data and 3-D tomography analysis of all CSL data in the event velocity reductions greater than 20 percent are detected. Additional nondestructive testing to determine extent of defects or to determine if tube debonding has occurred shall be at no cost to the Department. If the engineer determines that the drilled shaft is acceptable based on favorable testing results, the shaft is acceptable.

After completing integrity testing and the engineer has issues, written acceptance of the shaft, dewater and grout the access tubes. Foundation construction involving the shaft may continue.

803.05.16 Defective Shaft and Remediation: If the engineer determines that the shaft lacks integrity due to unacceptable anomalies in the concrete or failure to carry load, the shaft will be rejected. Suspend production shaft construction until identifying and resolving the problem. Modify the Drilled Shaft Installation Plan as required to document changes.

Rejected shafts will require further investigation, evaluation, remediation, or replacement. Submit the proposed plan of action to the Department for review and acceptance. Re-evaluation of the shaft may consist of, but is not limited to, additional nondestructive testing and/or coring. Corrective actions may consist of, but are not limited to: coring, removing anomalies, and replacing concrete; removing the shaft concrete and extending the shaft deeper; providing straddle shafts or a replacement shaft; and post grouting. When coring is used, the method and equipment shall provide for complete core recovery and shall minimize abrasion and erosion of the core.

All costs and delays associated with re-evaluation and corrective action are the responsibility of the contractor. Submit a plan for further investigation or remedial action for rejected shafts to the engineer for review and acceptance. Support all modifications to dimensions of shafts required by the investigation and remedial action plan by calculations and working drawings. All investigation and remedial action procedures, equipment, and designs shall be prepared by a registered Professional Engineer licensed in Louisiana, and submitted to the engineer for acceptance. Do not begin repair operations until receiving the engineer's written acceptance of the investigation and remedial action plan.

Dewater and fill with grout all access tubes and cored holes after completing tests and accepting the drilled shaft. Fill access tubes and cored holes using grout tubes that extend to the bottom of the tube or hole or into the grout already placed.

803.06 MEASUREMENT.

803.06.1 Drilled Shaft: Measure the drilled shaft from the accepted tip elevation by the linear foot.

803.06.2 Technique Shaft: Measure the technique shaft by the linear foot installed and accepted.

803.06.3 Permanent Casing: Measure the permanent casing by the linear foot installed of each diameter.

803.06.4 Test Shaft: Measure the test shaft by the linear foot installed and accepted.

803.06.5 Static Load Test: Measure the static load test per each test performed and accepted.

803.06.6 High-Strain Dynamic Test: Measure the High-Strain Dynamic test per each test performed and accepted.

803.06.7 Force Pulse (Rapid) Test: Measure the Force Pulse (Rapid) test per each test performed and accepted.

803.06.8 Bi-Directional Load Cell Test: Measure the Bi-Directional Load Cell test per each test performed and accepted.

803.06.9 Crosshole Sonic Log Test: Measure the Crosshole Sonic Log test per each drilled shaft tested and accepted.

803.06.10 Non-Destructive Test: Measure the Non-Destructive test per each drilled shaft tested and accepted.

803.07 PAYMENT.

803.07.1 Drilled Shaft: Payment for drilled shafts will be made at the contract unit price per linear foot and shall include, but not be limited to, the following when necessary:

- All materials and equipment required for excavating, pumping, furnishing and placing casings;
- Furnishing and placing concrete and reinforcement;
- Removing casings;
- Casings left in place;
- Slurry, slurry testing, equipment for performing testing, and disposing of slurry; and,
- Disposing of excess excavated material.
- No payment will be made for concrete required to fill oversize casings or excavation.

Acceptance and payment for drilled shaft concrete will be on a lot basis at the contract unit price per linear foot, adjusted in accordance with the following provisions. A lot will be considered as a continuous identifiable

placement that is completed in one day. Multiple shafts placed on the same day but in a non-continuous placement operation will require separate lots for each identifiable placement. Six cylinders per lot will be tested for compressive strength; in the event of sudden cessation of operation, a minimum of three cylinders will constitute a lot. Acceptance and payment for each lot will be made in accordance with Section 901.

Authorized overruns shall be paid as follows:

Payment for shaft lengths in excess of plan length, up to and including 16 feet, will be made at the contract unit price per linear foot. When reinforcing splices are required due to increases in shaft length up to and including 16 feet, the additional deformed reinforcing steel required for splices will be paid for at the contract unit price. No other compensation will be made for increases in shaft lengths up to 16 feet; and,

Payment for that portion of shaft length increased greater than 16 feet will be made in accordance with 109.04.

No compensation will be made for abandoned casings, concrete, etc. that remain in place. When the drilled shaft is found defective, core sampling, additional CSL testing, and non-destructive testing will be at no additional cost to the Department. If the shaft is accepted, only core sampling and grouting will be paid for by the Department and the payment will be made in accordance with 109.04.

803.07.2 Technique Shaft: Payment will be made at the contract unit price per linear foot for shafts installed and accepted, including any removal. Payment for shafts required by the engineer but not specified by the plans, except when required for acceptance of polymer slurries, will be made in accordance with 109.04.

803.07.3 Permanent Casing: Payment for permanent casing will be made at the contract unit price per linear foot.

803.07.4 Test Shaft

Payment will be made at the contract unit price per linear foot for shafts installed and accepted including any removal. Payment for shafts required by the engineer but not specified by the plans, except when required for acceptance of polymer slurries, will be made in accordance with 109.04.

803.07.5 Static Load Test: Payment for static load tests will be made at the contract unit price per each test performed and accepted and shall include all labor, materials, equipment, and incidentals necessary to perform the required testing.

803.07.6 High-Strain Dynamic Test: Payment for the High-Strain Dynamic test will be made at the contract unit price per each load test

performed and accepted. Payment includes all costs related to performing the load test, testing services, and reports by engineering consultant.

803.07.7 Force Pulse (Rapid) Test: Payment for the Force Pulse (Rapid) test will be made at the contract unit price per each load test performed and accepted. Payment includes all costs related to performing the load test, testing services, and reports by engineering consultant.

803.07.8 Bi-Directional Load Cell Test: Payment for Bi-Directional Load Cell test will be made at the contract unit price per each load test performed and accepted. Payment includes all costs related to the following:

- Load cells, load testing instrumentation, and installation;
- Performing the load test and testing services;
- Any delays due to the non-destructive testing schedule; and,
- Reports furnished by the engineering consultant.

803.07.9 Crosshole Sonic Log Test: Payment for Crosshole Sonic Log test will be made at the contract unit price per each drilled shaft tested and shall include the following:

- Furnishing and installing access tubes for CSL testing and non-destructive testing;
- Dewatering and grouting access tubes;
- Any delays due to CSL testing and non-destructive testing schedule;
- All labor, materials, equipment, and incidentals necessary to perform the required testing; and,
- Furnishing the Integrity Test report.

803.07.10 Non-Destructive Test: Payment for the Non-Destructive test will be made at the contract unit price per each drilled shaft tested and shall include all labor, materials, equipment, and incidentals necessary to perform the required installation of instrumentation and testing.

Payment will be made under:

Item No.	Pay Item	Pay Unit
803-01	Drilled Shaft (Diameter)	Linear Foot
803-02	Test Shaft (Diameter)	Linear Foot
803-03	Technique Shaft (Diameter)	Linear Foot
803-04	Static Load Test (Diameter)	Each
803-05	High-Strain Dynamic Test (Diameter)	Each
803-06	Force Pulse (Rapid) Test (Diameter)	Each
803-07	Bi-Directional Load Cell Test (Diameter)	Each
803-08	Crosshole Sonic Log Test (Diameter)	Each
803-09	Non-Destructive Test (Diameter)	Each
803-10	Permanent Casing (Diameter)	Linear Foot

Section 804
Piles

804.01 DESCRIPTION. Furnish and install piles of the specified type, dimensions, locations, elevations, and resistance with an undamaged cross section.

804.02 MATERIALS. Materials shall comply with the following sections and subsections.

Precast Concrete Piles	805
Concrete	901
Granular Material	1003.09
Coal Tar Epoxy Polyamide Paint	1008.04
Reinforcing Steel	1009.01
Steel H-Piles	1013.09
Steel Pipe Piles	1013.11
Timber Piles	1014

804.03 SUBMITTALS. Conform to Section 801. Provide submittals as required by the contract.

804.03.1 Pile Installation Plan: Submit a Pile Installation Plan describing the proposed pile driving system for review. Do not transport the pile driving equipment to the project site until acceptance is achieved. Submit the Pile Installation Plan no later than 30 calendar days prior to commencing pile operations. The engineer will evaluate the Pile Installation Plan for conformance with the plans and specifications. Within 21 calendar days after receipt of the Pile Installation Plan, the engineer will give notification of acceptance or if any additional information is required and/or changes that may be necessary to meet the plans and specification requirements. Resubmit any parts of the submittal that are rejected with changes as agreed upon for reevaluation. The engineer will give notification within seven calendar days after receipt of proposed changes, of their acceptance or rejection.

No changes in the driving system or installation method shall be made after final acceptance without the concurrence of the engineer. Provide at least the following information in the Pile Installation Plan:

1. Pile and Driving Equipment Data Form. The Department will supply this standard form. Complete the form with the proposed pile driving equipment for each unique pile driving system that will be used on the project.

Separate forms shall be used for each different pile driving system according to pile type and size. When a hammer cushion or pile cushion is composed of differing materials with varying properties, provide a detailed description of the composite cushion. Describe the material type, layout, and thickness of each cushion component.

2. Procedures for documenting pile construction logs and names and contact information for assigned personnel.

3. A list of equipment to be used to install the piles.

Perform and supply a drivability analysis to demonstrate the adequacy of the hammer as indicated in 804.03.1.2 using the wave equation method. Calculations shall be sealed, signed, and dated by a Louisiana registered professional engineer.

4. Proposed pile driving methods that may be required to facilitate pile driving installation such as preboring or jetting.

5. Detailed drawings of any proposed followers.

6. Detailed drawings of templates.

7. Identify use and location of pile splices, shoring, sheet piling, cofferdams, etc.

8. Pile driving sequence for each unique pile layout configuration.

9. Details of proposed load test system, equipment, and procedures in accordance with 804.10. Calculations shall be sealed, signed, and dated by a Louisiana registered professional engineer.

10. Proposed schedule for test pile and/or indicator pile program and production pile driving.

11. Details of the access system for attaching instrumentation for dynamic monitoring.

12. Other information shown on the plans or required by the engineer.

804.03.1.2 Pile Driving System Drivability Analysis: Provide a drivability analysis using the wave equation program (WEAP) to the engineer for each pile type and size required on the plans. Consider all critical conditions (i.e., scour, excavation, etc.) to determine the estimated driving resistance (blows per foot), and maximum tensile and compressive stresses during driving and end-of-drive conditions. Analyze splices, casing used, prebored holes, jetting, and other driving methods, if proposed. Verify driving conditions at various locations if the soil conditions change within the project area. Acceptance of the pile driving system will be based on the wave equation analysis computer program and as required elsewhere in this subsection. Provide sealed, signed, and dated calculations by a Louisiana registered professional engineer. Acceptance of the pile driving system does

not relinquish responsibility for driving the piles to the required pile tip elevation without exceeding the allowable pile stress limitation or causing damage.

The acceptance criteria used to evaluate the pile driving system from the wave equation will be the pile driving resistance and pile driving stresses. The target number of hammer blows at the required end of driving pile resistance for bearing piles shall be a maximum of 120 blows per foot. The pile driving resistance at any depth above the required pile tip elevation shall be less than 240 blows per foot. Do not exceed the maximum allowable pile driving stresses in 804.07.6.

The drivability analysis is based on the maximum driving resistance needed to obtain minimum penetration requirements specified on the plans, and overcome resistance of soil that cannot be counted upon to provide axial or lateral resistance throughout the design life of the structure; e.g., material subject to scour or down drag, and obtain the required bearing resistance.

When the wave equation analysis shows the proposed equipment or methods will result in either the inability to drive the pile with a reasonable driving resistance to the desired pile capacity or will exceed the maximum allowable pile driving stresses, modify or replace the proposed methods or equipment at no expense to the Department until subsequent wave equation analyses indicate that the proposed pile driving system and driving methods meet the required criteria for acceptability stated herein. As mentioned above, ultimate acceptance of the pile driving system is contingent upon trial and continued satisfactory performance in the field. The engineer may require further modification of the driving system if field observations indicate that the driving system is inadequate for any of the proposed driving operations for the project.

Make any required changes, including supplying additional hammers, which may result from unsatisfactory field performance.

804.03.1.3 Construction Site Survey Plan: When an item is included in the Contract for construction site survey, submit a Construction Site Survey Plan to the Project Engineer for review at least 30 calendar days prior to mobilization to the project site.

Describe how the construction site survey will be performed, equipment to be used, schedule and how data and information will be reported. Comply with the plans for the survey limits and features to be surveyed. Plan limits may be extended and features added by the Project Engineer. Show survey limits and features to be surveyed including owner names and addresses.

Provide the names and addresses of the Professional Engineer and the Professional Land Surveyor performing the work. Provide language to be used in the access request letters.

Do not mobilize to the site until acceptance of the Construction Site Survey Plan.

804.03.1.4 Vibration Monitoring Plan: When an item is included in the Contract for vibration monitoring, submit a Vibration Monitoring Plan to the Project Engineer for review at least 30 calendar days prior to commencing pile driving activities or construction activities that may produce vibrations.

Describe how vibration monitoring will be performed, any equipment to be used, the schedule, and how the data and information will be reported. Comply with the plans for the limits and features to be monitored. Plan limits may be extended and features added by the Project Engineer. Show survey limits and features to be monitored.

Do not begin pile driving operations until acceptance of the Vibration Monitoring Plan.

Upon completion of pile driving operations, submit to the Project Engineer for record a comprehensive report for each feature monitored during the pile driving operations.

804.03.2 Pre-construction Site Survey: Submit to the Project Engineer for review the Pre-construction Site Survey. Do not begin pile driving activities or construction activities that may produce vibrations until acceptance of the survey.

804.03.3 Pile Construction Log: Prepare a pile construction log document on each pile driven. Use the standard form supplied by the Department. Fully document the work performed relevant to pile driving activities. Each log shall be signed by the contractor's assigned supervisor of the work as identified in the Pile Installation Plan, and the Department's inspector. Submit the log to the Project Engineer within 24 hours of completion of the corresponding activity. Include at least the following information on the log:

- Pile identification number.
- Pile type and dimensions.
- Pertinent reference elevations including plan and as-built pile tip elevations
- Pile driving template.
- Depth and diameter of predrill or jetting.
- Hammer type.

- Pile cushion type, thickness and condition before and after driving.
- Instrumentation performed on the pile.
- Blow count and stroke height for every foot of drive.
- Observations such as work stoppages, equipment problems, pile cracking, pile damage, etc. with associated depth of penetration.
- Weather conditions during pile driving.
- Recorded ground vibrations if being measured.

804.03.3.1 Vibration Monitoring Report: Submit to the Project Engineer for review the Vibration Monitoring Report in accordance with 804.12.7 upon completion of pile driving activities or construction activities that may cause vibrations. Acceptance of the work will be contingent on acceptance of the Vibration Monitoring Report.

804.03.3.2 Post-construction Site Survey: Submit to the project engineer for review the post-construction site survey upon completion of pile driving activities or construction activities which may create vibrations. Acceptance of the work will be contingent on acceptance of the post-construction site survey.

804.03.3.3 Cast-in-Place Concrete Piles: Cast-in-place concrete piles shall be steel encased. Steel shells shall be of the specified diameter and type. Shells for cast-in-place concrete piles shall be of sufficient thickness and strength so that the shell will hold its original form and show no harmful distortion after it has been driven. Determine the shell wall thickness, if required. Fill the shell with Class A1 concrete and place in accordance with Section 805. When reinforcing steel is required, comply with Section 806.

804.04 PILE LENGTHS. Furnish piles in accordance with an itemized order list, which will be provided by the engineer, showing the number, size, length, and location of all permanent piles. Do not fabricate permanent piles prior to receipt of this order list. The lengths given in the order list will be the lengths that are assumed to remain in the completed structure after cutoff. At no expense to the department, increase the pile lengths to provide for fresh heading and for such additional length as may be necessary to suit the method of operation. When test piles or indicator piles are required, the pile lengths shown on the plans are for estimation purposes only. The approved order list will not be furnished until the test piles or until indicator piles have been driven, tested, and analyzed.

804.05 PILE DRIVING EQUIPMENT.

804.05.1 Hammers: Do not use non-impact hammers such as vibratory hammers unless specified on the plans or permitted in writing by the engineer. Hammers shall be rated based on the theoretical potential energy. Calibration of hammers and associated equipment shall be as required by the hammer manufacturer.

Provide methods and components for measuring hammer energy. For open-end diesel hammers, provide the Project Engineer a chart from the hammer manufacturer equating stroke in feet and blows per minute, and an approved device to determine and display ram stroke in feet.

804.05.2 Drive System Components and Accessories:

804.05.2.1 Hammer Cushion:

Equip all impact pile driving equipment designed to be used with a hammer cushion with a suitable thickness of hammer cushion material to prevent damage to the hammer and pile and to ensure uniform driving behavior. Hammer cushions shall be made of durable, manufactured materials, provided in accordance with the hammer manufacturer's guidelines. Wood, wire rope, and asbestos hammer cushions will not be allowed. Place a striker plate, as recommended by the hammer manufacturer, on the hammer cushion to ensure uniform compression of the cushion material. Inspect the hammer cushion in the presence of the engineer when beginning pile driving at each structure and after every 100 hours of use during pile driving operations. Replace the cushion when the hammer cushion begins to deteriorate or when the reduction in thickness exceeds 25 percent of the original thickness.

804.05.2.2 Helmet: Provide a properly sized helmet or drive head to piles driven with impact hammers to distribute the hammer blow to the pile head. Axially align the helmet with the hammer and the pile. The helmet shall be guided by the leads, not free-swinging. Fit the helmet around the pile head to prevent transfer of torsion forces during driving, while maintaining proper alignment of hammer and pile.

For special types of piles, provide appropriate helmets, mandrels, or other devices in accordance with the manufacturer's recommendations.

804.05.2.3 Pile Cushion: Protect the heads of precast concrete piles with a pile cushion made of plywood, hardwood, or a composite plywood and hardwood material. Store the pile cushion to prevent wetting. Wet or cracked cushions shall not be used. The minimum pile cushion thickness shall be established with the drivability analysis and modified based on field observation and/or dynamic monitoring results. Match pile cushion

dimensions with the dimensions of pile. Provide a new pile cushion for each pile driven, unless otherwise permitted by the engineer. Replace the pile cushion during pile driving when the cushion begins to deteriorate or burn. Do not determine pile resistance using a new pile cushion until after the pile has been driven a minimum of 5 feet or 100 blows.

804.05.2.4 Leads: Use pile driving leads that align vertical and battered piles, along with the hammer, in proper position throughout the driving operation. Construct leads in a manner that affords freedom of hammer movement while maintaining alignment of the hammer and the pile to ensure concentric impact for each blow.

Leads may be fixed, semi-fixed, or swinging type. Fit with a pipe gate at the bottom of the leads when using swinging leads. Embed leads adequately in the ground or the pile constrained in a structural frame, such as a template to maintain alignment.

Design leads to permit proper alignment of battered piles when applicable.

804.05.2.5 Templates: Provide a rigid and securely anchored template when swinging leads are used. When driving battered piles with swinging leads, use a two-tiered template or a template equipped with a device to hold the pile at the required batter. Support the bottom of the leads on the template. Construct the template to allow the pile to pass freely through the template without binding.

804.06 PREPARATION FOR INSTALLATION OF DRIVEN PILES.

804.06.1 Site Preparation:

804.06.1.1 Excavation: Do not drive piles until after completing the excavation. Remove all material forced up between the piles to the correct elevation before placing concrete for the foundation.

804.06.1.2 Abutment (End Bent) Fill: Construct the embankment at bridge ends to full height in accordance with 813.03 before driving affected piles. Drive piles through compacted embankment using prebored holes limited in depth to the height of the embankment.

804.06.1.3 Cofferdams: Prior to driving any piles, monitor the external stability of the ground outside of the cofferdam, wall inclination, and depth of excavation within the cofferdam to ensure the stability of the cofferdam. Complete all excavation within the cofferdam prior to driving piles. Inspect the depth of the excavation within the cofferdam for proper depth with a weighted line or other accepted method.

804.06.1.4 Cone Penetrometer Test (CPT) Assistance: When required by the plans, make arrangements with the Department to have the

CPT soundings taken at least 30 calendar days prior to driving test piles or indicator piles. Provide equipment to assist in moving the CPT truck around the site. The site for the soundings shall be level. Assist the Department in surveying the location and elevation of the CPT soundings.

804.06.2 Piling Preparation:

804.06.2.1 Transportation, Handling, and Storage of Piling: Provide adequate support for piles to prevent damage.

804.06.2.2 Collars: Provide collars, bands, or other accepted devices when required by the plans to protect timber piles against splitting or brooming.

804.06.2.3 Painting of Piling: Clean and paint the exterior surface of steel piles from the top of the pile to the elevation shown on the plans. Use a 2 coat coal tar epoxy polyamide paint system in accordance with Section 811.

804.06.2.4 Splicing Piles: Precast Concrete Piles: Furnish unspliced precast concrete piles and drive in full lengths, unless otherwise specified on the plans.

Steel Piles: Limit splices to two field splices per pile. Splice steel piles by welding with full penetration welds in accordance with Section 809.

Timber Piles: Furnish timber piles and drive full length.

804.07 CONSTRUCTION REQUIREMENTS.

804.07.1 Preboring: The size and depth of the prebored hole shall be included in the Pile Installation Plan. The depth of prebored holes shall not be below the scour elevation, unless accepted by the Engineer of Record.

Develop the preboring depth limits based on the soil information obtained from soil boring logs or CPTs. Upon installation of the pile, fill voids around the pile with granular material, meeting the requirements of 1003.09, and saturate with water.

804.07.2 Jetting: The use of jetting shall be included in the Pile Installation Plan. The depth of jetting shall not be below the scour elevation, unless accepted by the Engineer of Record.

Do not jet in footings, header banks, or in areas where stability of embankments or other structures would be endangered. Develop the jet pipe penetration limit to minimize the pile skin friction disturbance and to permit pile installation to the required pile tip elevation. Develop the jet pipe penetration limits based on soil information obtained from soil boring logs or CPTs and include in the Pile Installation Plan.

Use only one jet pipe when pre-jetting a hole prior to placing and driving the pile or when driving is interrupted and the jet is placed inside a steel pipe pile or a voided concrete pile. Use a minimum of two jets when jetting piles and driving concurrently using external jets. When using concurrent jetting and driving, keep the jets above the advancing pile tip. Cease jetting operations after reaching the jet penetration limit, and then drive the pile to the final tip elevation. Determine the pile resistances from the results of driving only after the jets have been withdrawn. Control and dispose of all jet water in accordance with Section 107.

804.07.3 Followers and Underwater Hammers: Include any use of followers and underwater hammers in the Pile Installation Plan. Provide the follower with a socket or hood, carefully fitted to the pile head to minimize energy losses and prevent pile damage.

804.07.4 Location and Alignment Tolerance: In pile bents, the horizontal location of the final top center of the pile shall be within 3 inches of the plan location measured perpendicular to the centerline of the cap and within 6 inches of plan location measured along the centerline of the cap. For footing piles, the horizontal location of the final top center of the pile shall be within 6 inches of plan location. The vertical location of the final top center of the pile shall be plus or minus 2 inches of plan cut-off elevation.

The axial alignment shall be within 2 percent of the specified alignment shown on the plans. The axial alignment will be checked on a minimum 5 feet of exposed pile. The engineer may suspend driving in order to check the pile alignment. Do not pull laterally on piles to correct misalignment. Do not splice a properly aligned section onto a misaligned section or build up a properly aligned section onto a misaligned section.

If the location or alignment tolerances are exceeded, provide the engineer with a sketch showing the actual versus plan positions of all piles in the bridge element along with proposed corrective measures. Corrective measures submitted with design documentation may be considered and reviewed by the Department. In pile bents, a pile with top center horizontal deviation from plan location measured perpendicular to the cap centerline by an amount greater than the specified tolerance plus 20 percent of the pile least dimension is not acceptable, and will require removal. The Department will not be responsible for any cost or time necessary for correction of out-of-tolerance piles. All design work shall be sealed, signed, and dated by an engineer licensed in Louisiana and documented on plan sheets meeting the format requirements of 801.05.2, and included in the contract plans. Compensation to the Department

for review and evaluation of resulting design work shall be according to 105.03.

804.07.5 Installation Sequence: The installation sequence for individual piles in a footing shall be one of the following options:

- From the center of the pile group outward;
- By rows from the center of the pile group to the side; or,
- By rows from one side of the pile group to the other side.

804.07.6 Pile Driving Stresses: Drive the piles without exceeding the maximum allowable driving stresses. For steel piles, do not exceed a compressive driving stress of 90 percent of the yield stress of the pile material. For timber piles, do not exceed a compressive driving stress of 3600 psi. For precast prestressed concrete piles, do not exceed the tensile and compressive driving stresses in Table 804-1.

Table 804-1
Maximum Allowable Driving Stresses [1]

Tensile Driving Stress (Normal Environments): U.S. Units $3\sqrt{f'_c} + f_{pe}$
Tensile Driving Stress (Corrosive Environments): U.S. Units f_{pe}
Compressive Driving Stress (All Environments): U.S. Units $0.85\, f'_c - f_{pe}$
f'_c = Concrete Compressive Strength, psi f_{pe} = Effective Prestress, psi

[1] Reference FHWA-HI-91-013 *"Design and Construction of Driven Pile Foundations."*

If indicated on the plans, use the allowable driving stresses for a corrosive environment.

804.07.7 Extent of Driving: Drive piles to the plan tip elevation or the order list tip elevation in accordance with the plans and specifications. If the penetration requirements and bearing capacity are achieved within 5 feet above the plan tip elevation or order list tip elevation, the engineer may consider penetration and capacity requirements to be satisfied. If penetration and bearing capacity requirements are not achieved within 5 feet above the plan tip elevation or order list tip elevation, acceptance from the engineer of record shall be required to terminate pile driving. Pile embedment shall not be less than 20 feet below the bridge scour elevation, unless indicated on the

plans. Use the following requirements to evaluate satisfactory penetration and resistance.

804.07.7.1 Pile Penetration Requirements: Practical refusal blow count depends on the site soil profile, the pile type, and hammer manufacturer limitations to prevent hammer damage. Practical refusal is broadly defined as a rate of 20 blows per inch at maximum stroke, for 3 consecutive inches. However, depending on site conditions, this criterion may not always be applicable. If practical refusal is encountered above the required plan tip elevation or order list tip elevation, a larger hammer capable of achieving the required penetration or pile installation techniques, such as preboring or jetting, may be required. Assure that the hammer is in proper working order. If hammer performance needs to be evaluated, the engineer may require dynamic monitoring. If the hammer performance indicates that pile driving system efficiency is not satisfactory, adjust the pile driving system until satisfactory performance is observed. Obtain written acceptance from the engineer before implementing changes to the accepted Pile Installation Plan, including early termination of driving. The cost of dynamic monitoring due to unsatisfactory hammer performance and any resulting delays shall be at no expense to the Department.

804.07.7.2 Pile Resistance Requirements: Determine pile resistance throughout driving in accordance with 804.09 and the plan information.

If pile resistance is less than expected, leave the pile approximately 1 foot above cut-off elevation to allow for evaluation. One or more of the following actions may be taken as coordinated with the Chief Construction Engineer: perform a restrike to check for increased resistance due to soil set-up, load pile to determine its ultimate resistance, or continue to drive until obtaining satisfactory resistance. If resistance results are affected by excess pore water pressure, or if this condition was observed during field testing of test, indicator, or monitor piles, perform restrikes as directly by the engineer to determine resistance after sufficient dissipation of excess pore water pressure has occurred.

804.07.8 Production Pile Restrikes: Perform all pile restrikes with a warm hammer that has applied a minimum of 20 blows to another pile or dummy block immediately before being used to restrike the selected pile. For precast concrete piles, use the original pile cushion used during initial driving. If the original pile cushion used to drive precast concrete piles is no longer in acceptable condition, use another similarly used cushion that is in acceptable condition. During restrike, achieve a maximum penetration of 3 inches or a

maximum of 20 blows, whichever occurs first. Report restrike blow counts as the number of hammer blows per increment of 1 inch.

804.07.9 Heaved Piles: If pile heave is observed, take level readings referenced to a fixed datum on all piles within a 15-feet radius after installation and periodically thereafter as adjacent piles are driven to determine the pile heave range. Continue measurements until the engineer determines that such checking is no longer required. Redrive all end bearing piles that have heaved more than ½ inch to the required resistance or penetration at no expense to the Department. Do not place concrete in pile casings until all piles in a footing have been driven.

804.07.10 Pile Extensions:

804.07.10.1 Cast-in-Place Extension of Precast Concrete Piles: A cast-in-place extension, excluding cutback, of 5 feet maximum is allowed when constructed in accordance with the plans. Driving the pile extension is not allowed. The final cut of the concrete shall be perpendicular to the axis of the pile. Thoroughly clean and wet the top of the pile prior to placing concrete.

804.07.10.2 Steel Piles: When permitted or shown on the plans, extend a steel pile by welding splice in accordance with Section 809.

804.07.11 Pile Cut-Offs

804.07.11.1 Precast Concrete Piles: Cut off perpendicular to the axis of the pile at the cut-off elevation shown on the plans. Exercise care to minimize spalling of concrete below the cut-off elevation.

804.07.11.2 Steel Piles: Cut off perpendicular to the axis of the pile at the cut-off elevation shown on the plans. Cuts shall be made in clean straight lines. Correct all irregularities due to cutting or burning by grinding or depositing weld material prior to placing caps.

804.07.11.3 Timber Piles: Saw off horizontally or as shown on the plans at the specified cut-off elevation. When piles support timber caps, saw to a horizontal plane or to the slope specified to fit the cap. Do not shim on tops of piles. Treatment of pile heads shall conform to 812.06.

804.07.11.4 Cast-In-Place Concrete Piles: Cut off perpendicular to the axis of the pile at the cut-off elevation shown on the plans after pile shells are fully driven, inspected, and accepted.

804.08 UNSATISFACTORY PILES. All damaged piles with diagonal or longitudinal cracking, transverse cracking, or other unsatisfactory conditions will be inspected by the engineer for further evaluation.

Correct all piles that do not meet location and alignment tolerances, do not achieve required resistance, or sustain damage. Do not manipulate piles to force them into proper position. All replaced or repaired piles shall be corrected at no expense to the Department.

804.08.1 Concrete Pile Repair: Cracked concrete piles will be rejected unless repaired as follows:

1. Piles with diagonal or longitudinal cracks will be rejected unless the pile meets the required penetration and resistance and can be cut off below the crack and extended with an approved structural repair.

2. Repair transverse cracks that show evidence of spalling with a patch and epoxy injection or a structural buildup.

3. Use epoxy injection to repair transverse cracks that show dusting during driving. Stop driving at the first sign of dusting and inject an epoxy into the crack to cure in accordance with the epoxy manufacturer's recommendations before driving is resumed. Use an approved epoxy product listed in the AML in accordance with Section 1017.

4. Repair minor hairline surface cracks in corrosive environments. In non-corrosive environments, minor hairline surface cracks will not be cause for rejection or repair, provided no change in the crack condition occurs during driving.

804.08.2 Steel Pile Repair: Damaged steel piles will be rejected unless repaired by removing damaged sections and replacement by a new steel section with full penetration welding in accordance with Section 809; replace protective coating in accordance with Section 811, when applicable.

804.08.3 Timber Pile Repair: If a timber pile breaks or splits longitudinally before reaching 5 feet of final tip elevation, it shall be rejected, removed, and replaced. If a timber pile has reached final tip elevation, but mushrooms at the top, it may be accepted if approved by the engineer.

804.09 DETERMINATION OF PILE RESISTANCE. Pile resistance is obtained during the end-of-driving or pile restrike. Determine the pile resistance by use of the test pile loading results, wave equation, dynamic load testing, or FHWA Modified Gates dynamic formula when specified on the plans.

804.10 FIELD TESTING PILES. Install test piles, indicator piles, or monitor piles of the length, number, size, and type specified at the location and penetration shown on the plans. Use the accepted Pile Installation Plan when installing piles. Consideration shall be given to the location of instrumentation with respect to mudline, template location, or water surface to avoid damage to the instrumentation. Add a minimum length of 2.5 times the pile size to test and indicator piles for attaching the dynamic testing instrumentation. Permanent piles may require field testing if indicated on the plans or as determined by the engineer**.**

804.10.1 Ultimate Pile Resistance: Ultimate pile resistance is the resistance that has been determined from either a static or dynamic load test of a test pile, indicator pile, or permanent pile.

804.10.2 Test Piles: Test piles are piles driven in advance of the permanent piles for purposes of determining pile length by static load testing. Test piles shall be long enough to be re-driven, if necessary, to the plan tip elevation of the nearest permanent pile. Test pile length shall be long enough to permit static load testing and dynamic monitoring for the driven length. Test piles shall be a new fabrication of the same design and cross section as the permanent piles it represents. Variations shall be accepted by the Chief Construction Engineer. The Fabrication Engineer shall be notified one week prior to casting. All test piles and/or indicator piles will be inspected by DOTD Fabrication Inspectors prior to delivery to the project.

804.10.3 Indicator Piles: Indicator piles follow the same specifications as test piles, except that a static load test is not anticipated. Indicator piles will require dynamic monitoring.

804.10.4 Monitor Piles: Monitor piles are permanent piles monitored during driving and restrikes using dynamic monitoring. The monitor pile is paid for as a permanent pile.

804.10.5 Pile Restrikes: Perform pile restrikes for test piles, indicator piles, or monitor piles in accordance with the time intervals specified below unless shown otherwise on the plans or as directed by the engineer. Restrike test piles within 24 hours after initial installation and make another restrike within 24 hours after load test. Perform a 24-hour and a 14-day restrike on indicator piles and a 24-hour restrike on monitor piles.

804.10.6 Test Site Preparation: Test pile and/or indicator pile shall model the subsurface conditions of the permanent piles at the most critical location. At the test pile location, excavate all overburden to the elevation shown on the plans and keep this excavation open during driving and loading. In lieu of the above, drive the test pile within an approved metal casing.

Provide a rigid and securely anchored template when swinging leads are used as specified in 804.05.2.5. Alignment tolerances of 804.07.4 shall apply. Provide any bracing or strengthening of the test pile required during loading or driving operations.

Fill cast-in-place concrete piles with concrete in accordance with 804.03; allow the concrete to set for at least 48 hours and attain a minimum compressive strength of 4000 psi before load testing.

804.10.7 Static Load Test: Load piles in accordance with ASTM D1143, Procedure A: Quick Test, except as noted below. Load piles at least 14 calendar days after initial driving unless otherwise directed by the engineer. All pile loading results will be evaluated by the engineer to determine pile length.

804.10.7.1 Loading Procedure: Apply the load in at least 20 equal increments or as directed. Hold each load increment for a period of five minutes. Load the pile to failure or until reaching the specified maximum test load shown on the plans. The pile will be considered to have failed when continuous jacking is required and continuous pile movement is measured. Unless otherwise directed, maintain load until the gross settlement has reached 10 percent of the pile width or diameter.

After the plunging load and failure deformation have been achieved, allow the loading system to equalize until pile movement and variations in jack pressure have ceased.

Remove load in decrements of 20 percent of the maximum load placed on the pile. Record gross settlement and load readings five minutes after reaching each unloading load decrement. Record the final recovery of the unloaded pile until movement is essentially complete for a period up to 30 minutes.

804.10.7.2 Hydraulic Jack: Calibrate the entire hydraulic system for all stages of loading and unloading through an accepted independent calibration service. Provide a certified laboratory report of the calibration tests to the engineer. This calibration shall be performed no more than 30 days prior to load test commencement. After the system is calibrated, no replacement parts will be permitted (except the pump) without recalibration of the system.

804.10.7.3 Displacement Instrumentation: Furnish instrumentation to monitor the gross displacement readings at the pile head during load testing. The instrumentation shall consist of three independent dial or electronic readout gauges capable of measuring displacement to a precision of ± 0.001 inches, with a minimum travel range of 4 inches or

15 percent of maximum pile width or diameter for circular piles, whichever is greater. Provide smooth bearing surfaces perpendicular to the direction of the gauge stem travel for each gauge.

804.10.8 Dynamic Load Test: Assist the Department in obtaining dynamic measurements with the Department's dynamic monitoring of test piles, indicator piles, monitor piles, and permanent piles during initial pile driving and during pile restrikes. Supply a temporary tent or shelter of sufficient size to cover the instruments and the operator/engineer from direct sunlight and rain during the dynamic test.

The cost of equipment, mobilization, or any delays due to dynamic monitoring shall be included in the item for Dynamic Monitoring Assistance.

804.10.9 Dynamic Monitoring Scheduling: Notify the project engineer at least 14 calendar days before the scheduled date of driving piles to be monitored. In addition, a minimum 24-hour-notice shall be given for projects staffed with full-time dynamic testing personnel. Allow a possible three calendar day delay for any scheduling conflicts of the Department's pile monitoring personnel. Confirm the driving date three working days prior to the scheduled driving date. The pile to be monitored and the pile driving equipment shall be on site and at the location to be driven at least 24 hours prior to monitoring. Test the pile driving equipment the day prior to dynamic monitoring to ensure that it is in proper working order. The project engineer will notify the engineer to confirm that the pile and all associated pile driving equipment are on site, have been inspected and assembled, and are ready for driving operations at least 24 hours prior to dynamic monitoring. Allow for a possible seven day delay when rescheduling is required due to contractor delay. Once the three day notification is provided and monitoring personnel are mobilized, the contractor will be back charged for all costs arising from contractor delays in pile testing.

804.10.10 Dynamic Monitoring Assistance: Prepare attachment points for attaching dynamic monitoring instrumentation as shown on the plans. Furnish and install anchors for concrete piles and drill and tap holes for steel piles. Provide an AC power source at the location where the dynamic monitoring computer will be placed during the monitoring. No welding shall take place in the general vicinity during dynamic monitoring operations.

When directed by the engineer, make piles available prior to driving for drilling or tapping holes. Provide safe, stable, and OSHA approved access to the pile head with a working area of not less than 16 square feet and equip so that the platform may be raised to the top of the pile while the pile is located in the leads and that sufficient distance down from the top of the pile can be

achieved as specified in 804.10. Include details of the access system for attaching instrumentation for dynamic monitoring in the Pile Installation Plan. Include one hour in the Pile Installation Plan for the attachment of instruments to the pile for each monitoring event. Occasionally, the pile driving may have to be temporarily interrupted for the transducers to be adjusted or replaced, or the monitoring results assessed. Use reasonable care when working with the instruments and accessories. At no expense to the Department, replace any dynamic monitoring equipment damaged by the contractor.

804.10.11 Dynamic Monitoring Instrumentation: Furnish dynamic pile monitoring instrumentation and accessories, as specified on the plans, to be used during all pile driving operations. Purchase new dynamic pile monitoring instrumentation compatible with the Department's dynamic pile monitoring device. Submit a list of equipment for review and acceptance before any items are purchased. Order equipment within 10 days of receipt of the Notice to Proceed. Allow eight weeks delivery time for the new dynamic pile monitoring instrumentation items. Deliver equipment to the Department's Pavement and Geotechnical Services Section, 1201 Capitol Access Road, Baton Rouge, Louisiana, 70804. Instrumentation will become the property of the Department upon completion of all pile driving monitoring. Provide warranty information, manuals, documentation, and invoice copies to the Department's Pavement and Geotechnical Services Section upon delivery of equipment. Register all warranties in the name of the Department.

804.10.12 Redriving Test or Indicator Piles: When steel piles fail to reach the required ultimate pile resistance, requiring redriving, extend steel piles by splicing if necessary and redrive as directed.

Do not extend or redrive precast concrete, cast-in-place concrete test piles or indicator piles. Drive a new test pile to the designated depth at an accepted location.

804.10.13 Test Pile and Indicator Pile Removal: If test piles or indicator piles are not to be used as permanent piles, remove to a minimum of 3 feet below natural ground or stream bed or as shown on the plans; dispose of as directed.

When the resistance of a permanent pile is less than the required resistance, the engineer may direct loading of a permanent pile. When loading a permanent pile, conduct the loading in accordance with the procedure given in 804.10.7.1, except the test load will be as directed by the engineer.

804.11 CONSTRUCTION SITE SURVEY: A construction site survey consists of a Pre-construction Site Survey and Post-construction Site Survey. Conduct the surveys in accordance with the limits and features shown in the Construction Site Survey Plan.

Perform Pre-construction Site Survey prior to pile driving activities or construction activities which may create vibrations.

Perform Post-construction Site Survey upon completion of pile driving activities, construction activities which may create vibrations, or at the time specified by the Project Engineer.

804.11.1 Pre-construction Site Survey: Provide locations and elevations, including surveying/engineering notes, photographs, and video records of structures and features shown in the Construction Site Survey Plan. Provide written statements of the condition of each structure and feature.

Perform work under the direct supervision of a Louisiana Registered Professional Engineer who is familiar with the area.

Make every attempt to gain permission from property owners for access to property to perform the site survey, including sending a certified return receipt access request letter informing the property owner of the survey and requesting permission to survey the existing conditions. If the property owner refuses access, notify the Project Engineer and log all contacts with the property owner. Furnish the Project Engineer a list of property owners contacted prior to any pile driving operations, and include all pertinent information.

804.11.1.1 Locations and Elevations: Collect line (location) and grade (elevation) data at structure slab corners and driveway pavement within the site in accordance with the accepted Construction Site Survey Plan. Use a Louisiana Registered Surveyor. Reference project survey controls. Data on abutting drives and walks shall be taken at approximately 20-ft. intervals and at the point of juncture with any structure to which they are attached.

Deliver three copies of all field notes with sketches clearly showing reduced elevations to the Project Engineer.

804.11.1.2 Photographs: Collect a series of photographs showing the existing conditions of structures and features in accordance with the Construction Site Survey Plan. Take photographs along the site as follows:

1. General: Take photographs along the project centerline at 50 foot intervals showing the following views:
   a. Upstation view

b. Property line side view at each station (every 100 feet) perpendicular to the project centerline, and every driveway and all structures fronting the project centerline.

2. Bridge structures: Take photographs at both ends of existing bridge approaches facing the bridge structure. Take photographs at the roadway centerline in the direction of the roadway alignment. Document any movable spans in the open and closed positions.

3. Specific structures or features: Take photographs at locations determined by the Project Engineer.

804.11.1.3 Videos: Collect video showing the existing conditions of structures and features in accordance with the Construction Site Survey Plan. Take video along the site as follows:

1. General: as described in 804.11.1.2.
2. Bridge structures: as described in 804.11.1.2.
3. Streets
4. Residences: interior and exterior of each residence within the survey area, including fronts, interior walls, ceilings, and existing damage.
5. Sidewalks
6. Grass areas
7. Specific structures or features: Take video at locations determined by the Project Engineer.

Show existing damage of structures and features. Travel speed of camera shall not be greater than 50 ft. per minute.

Capture master field videos on 1080p High Definition Video or higher, with accompanying audio. Edit captured field videos with audio and video quality maintained on the edited copy. Identify videos on screen with date made. Title edited videos prior to each new video sequence and after every 30 minutes of normal video run time. Include in titles the project name and number, tape name and number, location, and date made. Deliver four copies of video, along with a duplicate of the master field video (unedited), to the Project Engineer.

804.11.2 Post-construction Site Survey: Upon completion of pile driving activities or construction activities which may create vibrations, perform a Post-construction Site Survey in accordance with 804.11.1.

804.12 VIBRATION MONITORING. Perform vibration monitoring in and around sensitive features as indicated in the Vibration Monitoring Plan, the Contract or as directed by the Project Engineer. Sensitive features may

include archaeological sites, historic features, utilities, instruments, structures, etc.

Use the services of a testing lab and a vibration specialist engineer, acceptable to the Project Engineer to develop the vibration monitoring plan and conduct seismic monitoring of vibrations during pile driving and other heavy equipment operations in areas that are not normally subjected to such operations. Render complete reports and interpretations of the data obtained including the possible effects of the measured vibrations on adjacent and surrounding structures. Acquire baseline vibration data for a period of at least 24 hours prior to beginning construction activities.

Perform vibration monitoring during Test Pile and Production Pile driving operations to verify that vibrations from construction activities are below required threshold values. Modify construction methods as necessary to stay below threshold values.

Peak particle velocity (PPV) is the maximum rate of change of position of a soil particle with respect to time, measured on the ground. The velocity magnitude is given in units of inches per second.

Frequency of vibration is the number of oscillations that occur in 1 second. The frequency units given are in hertz (cycles per second).

Provide seismic monitoring of vibrations during pile driving and other heavy equipment operations in areas subjected to such operations as specified on the plans. Use an independent third party Louisiana registered professional engineer to provide complete reports and interpretations of the data obtained including the possible effects of the measured vibrations on adjacent and surrounding structures.

804.12.1 Equipment and Instrumentation: Provide seismograph(s) with self-triggering units(s), accepted by the Project Engineer, and capable of recording three mutually perpendicular components (longitude, transverse, and vertical) of ground motion time histories, in terms of particle velocity. Provide units capable of reporting the frequency as well as the peak values for all vibration time histories.

The seismographs shall be Type I waveform recorders. It provides a particle velocity wave form or time history of the recorded event, sometimes in conjunction with peak event information. Independent chart recorders with separate motion transducers can be used in place of "stand-alone" monitors like seismographs when accepted by the Project Engineer.

804.12.2 Number and Location: Place seismographs and ground transducers in the ground outside and adjacent to the structure(s) or feature(s) to be monitored on the side facing the construction activity. Monitor

structure(s) in accordance with the Vibration Monitoring Plan, the Contract, and as directed by the Project Engineer. Exact transducer number and locations shall be as directed by the Louisiana registered professional engineer.

Vibration monitoring distance (VMD) is the distance from the construction activity to the limits of monitoring. Comply with the limits shown in Table 804-2, the Contract, and the Vibration Monitoring Plan.

Table 804-2
Vibration Monitoring Distance (VMD)

Maximum Distance	Receptor
200 feet	Residential and Commercial Structures
500 feet	Historical Structures, Industrial Structures, Sensitive Features, Settlement Sensitive Ground, Utilities, Instruments, & Archeological Sites

The number of seismographs required is dependent on the specific site. As a minimum, two seismographs of Type I are required on site. One seismograph will be used on site with one or more held in reserve for use at a specific complaint or potential complaint location.

804.12.3 Transducer Attachment (Coupling). Place transducers on the measurement surface and cover with heavy sandbags as directed by the Louisiana registered professional engineer.

804.12.4 Particle Velocity Controls and Threshold Limits: Limit ground particle velocity so that structural damage due to pile driving is avoided. Measure Peak Particle Velocity (PPV) with instrumentation and methods described 804.12.1. Peak particle velocity shall satisfy the following controls:

1. Limit PPV to values less than a specific control limit at the nearest structure, which is summarized in Table 804-3 for different types of structures.
2. Record particle velocities in three mutually perpendicular axes. The maximum allowable peak particle velocity reading will be that of any of the three axes.

Table 804-3
Limiting Particle Velocity

Structure and Condition	Limiting Particle Velocity (in/sec)
Historic Structures, Sensitive Features, Sensitive Instruments, and Sensitive Utilities	0.1
Residential Structures	0.5
Commercial and Industrial Structures	2.0
Bridges	2.0

804.12.5 Monitoring Ground Vibrations: Monitor ground vibrations at specified locations. All three components (longitudinal, transverse, and vertical) of particle velocity shall be measured and recorded. Background vibrations due to passing traffic or other activities should also be monitored prior to pile driving activities to establish a baseline.

Maintain a pile driving log for the full length of penetration and submit daily reports to the Project Engineer on piles driven and vibrations measured in accordance with 804.03.3. These logs shall be in the form specified in the Pile Installation Plan.

804.12.6 Application of the Particle Velocity Control: If 80 percent of the limiting particle velocity shown in Table 804-3 for the structure monitored is exceeded for any single axis, cease pile driving operations or the construction activity causing vibration, and notify the Project Engineer with a written report. Include in the report driving information, vibration measurement data, and the proposed corrective action. The Project Engineer will make a determination before proceeding with pile driving operations.

If 100 percent of the limiting particle velocity shown in Table 804-3 for the structure monitored is exceeded or more, cease operations and notify the Project Engineer with a written report. Include in the report driving information, vibration measurement data, and the proposed corrective action. Evaluate alternative pile installation equipment and techniques in case corrective/mitigation action is not effective. Adjusting pile driving operations will be at no additional cost or time to the Department.

Do not commence with pile driving operations until the Project Engineer acknowledges in writing that a pile installation change has been implemented. Modify the Pile Installation Plan accordingly.

Notify the Project Engineer immediately if visual inspection indicates that damage to structure(s) may be occurring due to vibrations, or if property

owners claim damage due to vibrations. Additional vibration monitoring or construction site survey may be required.

804.12.7 Vibration Monitoring Report: Submit to the Project Engineer a digital copy and hard copy of a comprehensive report for each structure and feature monitored. Include in each report a discussion of the following:

1. Site conditions and descriptions, including a site map drawn to scale showing the location of the structures and/or sensitive features and the location of the construction activity.
2. Field procedures and equipment used, including seismograph manufacturer, model and unit serial number.
3. The name of the seismograph operator.
4. A digital and hard copy of all ground vibration time histories, in units of velocity.
5. A record summary of the maximum value of ground vibration in any one of three directions measured (longitudinal, transverse, or vertical), the frequency associated with the maximum value in hertz, and the measured distance between the seismograph and the construction activity.
6. Construction activities including construction equipment used, environmental conditions such as temperature and relative humidity ranges during construction, and other activities that are not construction related (train activity, heavy traffic, flooding, etc.).
7. Analysis of results with conclusions and recommendations.
8. Any additional inclusions to the report(s) requested by the Project Engineer.

804.12.8 Archiving: Maintain copies of all submittals for at least 5 years, or until all pending litigation is completed.

804.13 MEASUREMENT.

804.13.1 Piles: Piles will be measured by the linear foot of installed and accepted pile below pile cut-off elevation. Redriving of permanent piles used as load test anchorages will not be measured for payment.

804.13.2 Splices: Pile splices will not be measured separately for payment.

804.13.3 Pile Extensions: No measurement will be made for extensions necessitated by damage to the pile during driving or overdriving error.

804.13.3.1 Precast Concrete Pile Extensions: Measurement of cast-in-place extensions on precast concrete piles will be made by the linear foot. The length of the extension is the cast length. The cast length will be the cut back plus the extension and will be multiplied by four to determine the quantity for payment. No deduction will be made from the ordered length of pile driven due to cut-back for extension.

804.13.3.2 Steel Pile Extensions: Measurement of extensions on steel piles will be made by the linear foot. The total number of linear feet of piling driven will be determined by adding 3 foot to the net length of piling for each authorized splice in place in the finished structure.

804.13.4 Pile Cut-Offs: Cut-offs will be measured by the linear foot. Measurement will not be made for cut-offs necessitated by crushing, brooming, splitting, or other damage resulting from driving. No measurement will be made for required cut-offs of cast-in-place concrete pile shells.

Cut-offs will remain the property of the contractor.

804.13.5 Test Piles and Indicator Piles: Test and indicator piles are measured per each. Measurement for payment includes removal. Piles pulled and reused as permanent piles will be measured as provided under 804.13.1.

804.13.6 Static Load Test: Load tests will be measured per each. The number of load tests will be the number of load tests performed and accepted.

804.13.7 Dynamic Monitoring Assistance: Dynamic Monitoring Assistance is measured per each satisfactory completion of monitoring. Measurement includes all equipment, material, labor, and time necessary to complete this item.

Dynamic monitoring occurrences that are necessary because of contractor error will not be measured for payment.

804.13.8 Dynamic Monitoring Instrumentation: Dynamic Monitoring Instrumentation is measured per lump sum, which includes all materials, equipment, tools, and incidentals necessary to complete this item. Quantity of materials and equipment is shown on the plans.

804.13.9 Cone Penetrometer Test Assistance: Measure CPT Assistance per each satisfactory completion of the test. Measurement includes all equipment, material, labor, and time necessary to complete this item.

804.13.10 Prebored Holes and Jetting: Prebored holes and jetting will not be measured for payment.

804.13.11 Construction Site Survey: Construction site survey will be measured per lump sum.

804.13.12 Vibration Monitoring Vibration monitoring will be measured per day. A day is defined as a day in which the contractor drives piles for at least 6 hours.

804.14 PAYMENT. Payment will be made at the contract unit price which includes all materials, equipment and labor necessary to complete the item.

804.14.1 Piles: Payment will be made at the contract unit price for the type and size of pile.

804.14.2 Pile Extensions: Payment will be made at the contract unit price for the type and size of pile extended.

804.14.3 Pile Cut-Offs: Payment will be made at the contract unit price for the type and size of pile cut-off.

804.14.4 Test Piles: Payment for test piles will be made at the contract unit price.

804.14.5 Indicator Piles: Payment for indicator piles will be made at the contract unit price. If determined from the driving records and the dynamic monitoring that the indicator pile should be load tested, the price will be negotiated.

804.14.6 Static Load Test: Payment for loading piles will be made at the contract unit price.

804.14.7 Dynamic Monitoring Assistance: Payment will be made at the contract unit price. Reimburse the Department for the expenses associated with the delays caused by the contractor.

804.14.8 Dynamic Monitoring Instrumentation: Payment for dynamic monitoring instrumentation will be made at the contract unit price.

804.14.9 Cone Penetrometer Test Assistance: Payment will be made at the contract unit price.

804.14.10 Construction Site Survey: Payment for construction site survey which includes pre-construction and post-construction site surveys will be made at the contract unit price which includes furnishing materials, tools, equipment, labor, and incidentals required to complete this item.

804.14.11 Vibration Monitoring: Payment for vibration monitoring will be made at the contract unit price which includes monitoring service, reporting and documentation of results, equipment, material, labor, and time necessary to complete the item.

Payment will be made under:

Item No.	Pay Item	Pay Unit
804-01	Precast Concrete Piles (Size)	Linear Foot
804-02	Treated Timber Piles (Type)	Linear Foot
804-03	Steel Piles (Type and Size)	Linear Foot
804-04	Cast-in-Place Concrete Piles (Size)	Linear Foot
804-05	Precast Concrete Test Piles (Size)	Each
804-06	Timber Test Piles	Each
804-07	Steel Test Piles (Type and Size)	Each
804-08	Cast-in-Place Concrete Test Piles (Size)	Each
804-09	Static Load Test (Type and Size)	Each
804-10	Precast Concrete Indicator Piles (Size)	Each
804-11	Timber Indicator Piles (Type)	Each
804-12	Steel Indicator Piles (Type and Size)	Each
804-13	Cast-in-Place Concrete Indicator Piles (Size)	Each
804-14	Dynamic Monitoring Assistance	Each
804-15	Dynamic Monitoring Instrumentation	Lump Sum
804-16	Cone Penetrometer Test (CPT) Assistance	Each
804-17	Construction Site Survey	Lump Sum
804-18	Vibration Monitoring	Day

Section 805
Structural Concrete

805.01 DESCRIPTION. Furnish, place, finish, and cure concrete in bridges, culverts and other structures.

Quality assurance requirements shall be as specified in the latest edition of the Department's publications titled *Application of Quality Assurance Specifications for Portland Cement Concrete Pavement and Structures* and *Application of Quality Assurance Specifications for Precast-Prestressed Concrete Plants.*

Conform to Section 802 for structural excavation and backfill.

805.02 MATERIALS. Comply with the following sections or subsections:

Steel Joints	815
Portland Cement Concrete	901
Mortar	1001.03
Joint Materials for Pavements and Structures	1005
Waterstops	1005.07
Reinforcing Steel	1009
Curing Materials	1011.01
Special Finish for Concrete	1011.03
Metals	1013
Steel Stay- in- Place Forms	1013.28
Concrete Pipe and Precast Reinforced Concrete Drainage Units	1016
Flexible Plastic Gasket Material	1016.01.1
Epoxy Resin Adhesives	1017
Form Release Agents	1018.06
Geotextile Fabric	1019

Use grout conforming to ASTM C1107. Prepare and test grout cubes in accordance with ASTM C109.

Classes of concrete furnished shall be as follows:

Table 805-1
Classes and Uses of Concrete

Concrete Class	Use
A1, A2, A3	Concrete exposed to sea water, and all other concrete except as listed herein.
MASS(A1), MASS(A2), MASS(A3)	Mass concrete
P1, P2, P3	Precast concrete
S	Drilled shafts, seals and underwater placements
M	Minor structure

805.03 FORMS.

805.03.1 Design and Construction: Comply with Section 817. Forms shall be mortar tight, designed and constructed so that finished concrete conforms to specified dimensions and contours. If required, design and construct forms to accommodate partial removal for finishing operations.

Where lower formed spaces are inaccessible, leave lower form sections loose so that they may be removed for cleaning formed spaces immediately before placing concrete. As far as practical, design forms so that form marks will conform to general lines of the structure.

When possible, forms shall be daylighted at intervals not greater than 10 feet vertically with openings sufficient to permit free access for inspection and working the concrete.

Set and maintain forms true to required line and grade until concrete sufficiently hardens.

When concrete is formed by soil, provide firm soil or compacted material.

805.03.2 Form Surface: Forms for exposed concrete surfaces shall not adhere to nor discolor concrete. Chamfer forms for exterior corners and round interior corners to prevent sharp corners. Bevel or draft projections and penetrations to ensure easy removal.

Treat forms with an approved form release agent prior to placement of reinforcing steel. Do not use release agents that will adhere to or discolor concrete.

Prior to treating form surfaces and placing concrete, clean the interior of forms of dirt, sawdust, shavings, and all other debris.

805.03.3 Form Ties: Design and construct form ties to withstand the forces of concrete placement and other applied loads. Construct metal ties or anchorages within forms to permit their removal to a depth of at least 1/2 inch from the face without damage to concrete.

805.03.4 Formwork and Surface Tolerances: Provide hardened concrete finish lines in accordance with plan dimensions and the tolerances specified in Table 805-2 prior to removal of formwork and shores. For tolerances not shown, conform to ACI 117.

For non-conforming formwork or concrete surfaces, submit a proposed corrective action plan to the Project Engineer for review. Include proposed repair locations, limits, and procedures. Repair procedures determined by the Department to be potentially detrimental to the structure or its performance will not be permitted. Do not begin corrective action until submittal acceptance.

805.03.4.1 Precast and Prestressed Concrete: Conform to the"*Manual for Quality Control for Plants and Production of Precast-Prestressed Concrete Products (MNL-116-Latest Edition)* published by the Prestressed Concrete Institute.

805.03.4.2 Cast-in-Place Concrete: Conform to Table 805-02.

Table 805-2
Tolerances for Cast-in-Place Concrete Construction

Description			Tolerance, (Inches)
Camber	Measured from camber line		+1/8, −0
From Plumb	Exposed Surfaces		±3/8
	Concealed Surfaces		±3/4
	Columns		
	In 10 feet of Length		±1/4
	Over Entire Length		±1
Horizontal	Element Centerline Alignment		±1/2
	Centerline of Bearing Riser		±1/8
	Abrupt form offset at Barrier Rail		±1/8
	Location of Openings through Concrete Elements		±1/2
Vertical	Profile Grade Line		±1/2
	Bearing Riser Elevation		±1/8
	Top of Other Concrete Surfaces and Horizontal Grooves		
		Exposed	±3/4
		Concealed	±1
		Location of Concrete Openings	±1/2
Dimensions of Specified Elements	Bridge Deck / Slab Thickness		+1/4, −1/8
	Footings		
		Formed Surfaces	+2, −1/2
		Surfaces Placed against Soil	+3, −1/2
		Thickness	+3, −1
	Other Concrete Elements		+1/2, −1/4
	Concrete Openings		±1/2
From Plane	**Slope of Surfaces In 10 feet:**		
		Watertight Joints	±1/8
		Bridge Decks	±1/4
		Other Exposed Surfaces	±1/2
		Concealed Surfaces	±1
Bearing Riser	Horizontal Dimensions		+1, −1/4

805.03.4.3 Bridge Deck and Approach Slab Ride Quality: This subsection is under development.

Table 805-3
Segment Roughness

This table is reserved.

805.03.5 Steel Stay-in-Place Forms: Conform to the following:

1. Form support angles or straps shall not be welded to steel structural members.
2. Shield steel structural members to prevent weld splatter or arc strikes during form support installation.
3. Use only in interior bays.
4. Dead load deflection shall not exceed L/240 or 3/8 inch.
5. Provide reinforcing chairs which span corrugations and properly support the reinforcing steel.
6. Metal chairs in contact with the metal forms shall be hot-dipped galvanized, electroplated with zinc (GS Grade), epoxy coated, or stainless steel.
7. Repair damage to galvanized surfaces on the metal forms or the visually exposed surfaces of the support angles in accordance with 811.06.6.1.
8. Remove portions of support angles that protrude above the top of the girder flange more than 1/2 inch.
9. Steel stay in place forms shall not be considered part of the girder lateral support system.

805.04 MINIMUM CONCRETE COVER. Measure cover from face of concrete surface to nearest face of reinforcing steel. Provide minimum concrete cover in accordance with the plans or as specified in Table 805-4:

Table 805-4
Concrete Cover Requirements

Location	Minimum Cover (inches)	Tolerance (inches)
Top of deck	2 1/2	+1/4, −1/8
Bottom of deck	1 1/2	
Stirrups and ties	2	
Contact with water	3	
Contact with soil	3	+1/2, −1/4
Drilled shafts	6	−3
Other	2	+1/4, −1/8

805.05 HANDLING AND PLACING CONCRETE.

805.05.1 General: Prior to placing concrete, submit a concrete placement plan to the engineer that will result in sound concrete, in the correct location and conforming to plan dimensions for record.

In preparation for placing concrete, remove all sawdust, chips, and other debris from form interiors. Inspect forms then saturate with water immediately prior to placing concrete.

Strip forms, inspect, and allow substructure concrete to attain compressive strength of at least 4000 psi prior to placement of superstructure loads.

Place concrete without segregating materials and without displacing reinforcement. Discontinue operations if placement methods cause segregation, impede workability, or produce other detrimental effects.

When placing operations involve dropping concrete more than 5 feet, deposit it through a tremie or other accepted means identified in the concrete placement plan.

Consolidate concrete during and immediately after depositing by mechanical vibration, subject to the following provisions:Use internal vibration unless authorization for other methods is obtained or provided herein.

1. Use vibrators capable of transmitting vibrations to concrete at frequencies of at least 4500 impulses per minute.

2. Vibrate with intensity that visibly affects concrete over a diameter of at least 18 inches. Vibrate with sufficient duration and intensity to thoroughly consolidate concrete without causing segregation. Limit vibration at any one point as required to prevent localized areas of grout forming.

3. Provide a sufficient number of vibrators to properly place and consolidate each concrete batch.

4. Manipulate vibrators to thoroughly work concrete around reinforcement and embedded fixtures and into corners and angles of forms. Apply vibration at the point of deposit and in the area of freshly deposited concrete. Insert and withdraw vibrators slowly and vertically to and from the concrete. Apply vibrators at points uniformly spaced and which overlap the visibly affected zones.

5. Do not vibrate directly against reinforcement. Take special care when reinforcement is in sections or layers of concrete which are between initial and final set.

6. Supplement vibration by spading as necessary to ensure smooth surfaces and dense concrete along form surfaces, in corners, and locations inaccessible to vibrators. Provide methods in the concrete placement plan.

7. Reduce the number and size of trapped air cavities (bug holes) in the formed concrete surfaces to minimize finishing.

8. Place concrete in horizontal layers no more than 15 inches thick unless otherwise permitted. Place and consolidate each layer before the preceding layer has achieved initial set to prevent damage to green concrete and avoid planes of separation between lifts.

9. When an emergency results in less than a complete layer being placed in one operation, terminate placement with a temporary vertical bulkhead. Prior to continuing placement, the quality of the initial placement and the location of the construction joint will be evaluated for acceptance. Some remediation may be required. Construction joints are to be in accordance with 805.05.8.

10. During concrete placements, wash and remove any materials that adhere to the surface of adjacent members. Following concrete placement, remove accumulations of mortar splashed on reinforcement steel and forms. Do not mix dried mortar chips and dust in fresh concrete.

11. Protect any installed projection (reinforcement, anchor bolt, etc.) from disturbance between initial and final set of concrete.

805.05.2 Reinforced Concrete Box Culvert: Furnish structures of either cast-in-place concrete or precast concrete units. Install precast units in accordance with Section 701. The maximum joint opening between precast sections is 0.75 inches. Construct each headwall monolithically, unless otherwise specified. Headwall installations include wingwalls and supporting footings in accordance with the plans.

At the time of final acceptance, clean concrete box culverts of debris and soil to the culvert invert.

805.05.2.1 Cast-in-Place: When box culverts are constructed in segments, vertical construction joints shall be perpendicular to the axis of the culvert.

For culverts 4 feet or less in height, walls and top slab may be constructed monolithically. For culverts more than 4 feet in height, walls shall be placed independently from the top slab placement.

805.05.3 Footings, Columns, Walls, Caps, and Girders: Deposit concrete uniformly the full length of the element and bring up evenly in horizontal layers. Place concrete in forms with no standing water. Use monolithic placement unless otherwise specified or allowed by the engineer.

Place concrete between construction joints in a continuous operation. Prior to placing subsequent concrete sections, previously placed sections shall be capable of supporting applied loads.

Concrete supporting formwork shall have attained at least 3000 psi compressive strength prior to placing concrete.

805.05.4 Slab Spans and Girder Decks: Place concrete full depth and full width between vertical bulkheads in one continuous operation for each placement in accordance with the placement sequence specified in the plans. Submit proposed alterations to the specified placement sequence to the Engineer of Record with supporting calculations for review. Review of proposed alterations to the placement sequence will be at no expense to the Department.

Placement shall not induce stresses in previously placed concrete which is between initial and final set.

Use placement rates in accordance with Table 805-5.

Table 805-5
Placement Rates for Slab Spans and Girder Decks

Placement Size (cubic yards)	Minimum Placement Rate (cu yds / hour)
0-50	20
51-75	25
76-125	30
Over 125	40

805.05.4.1 Slab Spans: Anchor void forms to prevent movement during placement of concrete in voided slabs. Forming concrete with soil is not allowed for slab spans.

805.05.4.2 Girder Decks: Provide sufficient supervision, manpower, equipment, tools, and materials to assure proper production,

placement, and finish of concrete for each placement in accordance with minimum placement rates specified in Table 805-5. If minimum placement rate is not achieved, the engineer may reject the placement. Further placement of similar nature and size will not be permitted until corrective measures have been taken to assure that the minimum placement rate can be met.

The contractor is responsible for line and grade control. Verify girder camber prior to constructing risers. Construct riser elevations to accommodate actual girder camber and vertical curvature to maintain cast-in-place deck plan thickness.

805.05.5 End-On-Construction: Use end-on-construction only for slab span bridges, either cast-in-place concrete or precast concrete, when the construction cannot be conducted from the ground or it is impractical to work from the water surface. Provide to the engineer a submittal document requesting permission to use end-on-construction. Include drawings and analysis demonstrating construction loads will not adversely affect members. Construction loads include dead loads, live loads, impact, wind loads, etc. Include details of matting systems, crane specifications, dimensions, lifting loads, and corresponding extension distance from the crane. The drawings and calculations shall be stamped, signed and dated by a professional civil engineer registered in Louisiana.

Do not begin end-on-construction activity until the Department's acceptance of the submittal. Acceptance of the end-on-construction submittal will not relieve the contractor from responsibility for safe and successful completion of the work. Repair all damage to the structure caused by related construction activities at no cost to the Department.

805.05.6 Conveying Concrete: Arrange equipment so that no vibration damages freshly placed concrete. Operate conveyance mechanisms to prevent segregation of concrete. Supply a homogenous stream of concrete.

805.05.7 Depositing Concrete Underwater: When required by the plans or allowed by the engineer, concrete may be placed under water.

Place concrete without segregation and in one continuous placement using a tremie. Refer to 803.05.9 for tremie requirements. Provide a surface as level as possible. A leveling course may be allowed for seal concrete after dewatering subject to design considerations.

Prior to constructing subsequent placements, remove laitance and other unsatisfactory material from the construction joint surface without damaging the concrete.

805.05.8 Construction Joints: Construction joints with reinforcement crossing the plane of the joint shall conform to the following.

Install construction joints only where located on the plans or shown on the placement schedule. Do not install construction joints between levels of mean low water and mean high water. Submit proposed construction joint locations not shown in the plans for review by the Engineer of Record.

Roughen the surface of hardened concrete without leaving loosened particles of aggregate or damaged concrete. Thoroughly clean the roughened surface of foreign matter and laitance immediately prior to placing subsequent concrete.

Allow at least seven days between adjacent placements. Achieve bonding as follows.

805.05.8.1 Neat Cement Slurry: Thoroughly saturate hardened concrete with water and place adequate neat cement slurry at the joint. Place new concrete before the slurry has attained its initial set. Place concrete continuously from joint to joint. Finish joints true to plan line and elevation.

805.05.8.2 Epoxy Resin: Coat vertical concrete surfaces of construction joints prior to each subsequent placement with an accepted epoxy resin conforming to Section 1017. Apply in accordance with the manufacturer's recommendations. A maximum of 2 inches of reinforcing steel may be coated with a thin layer of epoxy at the joint interface.

805.05.9 Water Stops: Place water stops of metal, rubber, or plastic conforming to 1005.07 as shown on the plans. Where joint movement is to be provided, use waterstops of a type permitting such movement without damage. Splice waterstops in conformance with manufacturer's recommendations to form continuous watertight joints.

805.06 CURING. Use wet cure method for all concrete unless specified herein or permitted otherwise. Cure precast concrete in accordance with 805.09.4.

Cure all concrete a minimum of seven curing days. The curing day is defined as 24 hours in which the temperature is above 50°F and if binary or ternary mixes used, 55°F. Colder days may be counted if accepted methods are used to maintain the specified minimum air temperature adjacent to concrete.

Do not permit salt water to come in contact with concrete for at least 30 days.

805.06.1 Wet Cure Method: Wet cure concrete utilizing burlap, combined burlap and white polyethylene, or other acceptable blanket materials. Immediately cover the exposed concrete after finishing with two thicknesses of wet burlap or an approved equivalent. Secure blanket so that it

is in contact with the concrete at all times. After placement, keep the concrete continuously wet for at least 7 curing days.

805.06.2 Membrane Cure Method: For curing concrete in minor drainage structures, bridge substructures, and diaphragms, a membrane curing compound in accordance with 1011.01 may be substituted for wet curing when surfaces do not require a Class 2 or Class 3 finish. When membrane curing is used, cover or shield exposed reinforcing steel and construction joint surfaces to prevent coating with curing compound. Wet cure construction joint surfaces.

Seal concrete surfaces in contact with forms immediately after form removal. Apply curing membrane as soon as surface moisture has evaporated. Method and application rate of curing compound shall be in accordance with the manufacturer's recommendations, but the application rate shall not be less than one gallon per 100 square feet of surface area. Apply the compound in one or two applications. If the compound is applied in two applications, apply the second application no more than 30 minutes after first application.

After final application of curing compound, the surface should have the appearance of a blank white sheet of paper.

If rain falls on newly-coated concrete before the film has dried sufficiently to resist damage, or if the film is damaged, apply a new coat of compound to affected surfaces.

805.06.3 Form Curing Method: Form curing, in which the concrete remains in forms that have not been disturbed, is an acceptable method for formed surfaces. Wet cure or membrane cure unformed surfaces as specified in 805.06.

805.06.4 Deck Curing: Maintain the deck in surface saturated condition using foggers until application of curing compound. Use a membrane cure with a Type 2 curing compound immediately after final texturing as an interim curing measure in accordance with 601.03.10. Exposed reinforcing steel and joints shall be covered or shielded to prevent contact with curing compound. Use wet curing methods when concrete has set sufficiently to support blanketing materials without marring the surface.

Close the deck to all traffic, including vehicles of the contractor, until concrete has been in place and cured for 14 curing days and has attained 4000 psi compressive strength.

805.07 REMOVAL OF FORMS AND FALSEWORK. Remove support forms and falsework without overstressing the concrete and in such a manner as to permit concrete to uniformly and gradually take stresses due to its own

weight. During continued cold weather, when accepted artificial heating methods are not provided, the engineer may permit removal of forms and falsework at the end of a period of calendar days equal to two times the number of curing days specified.

Remove support forms and falsework in accordance with the strength requirements of Table 805-6 and time requirements of Table 805-7.

Remove side forms in accordance with Table 805-6.

Table 805-6
Removal of Support Forms and Falsework
Cast-in-Place and Precast Non-Prestressed Concrete

Concrete Class	Compressive Strength, psi
A1, A2, A3, S	4000
MASS(A1), MASS(A2), MASS(A3)	4000
M	3000
P1, P2, P3 Non-Prestressed	3000

Table 805-7
Forms and Falsework Removal Schedule
Cast-in-Place and Precast Non-Prestressed Concrete

Form and Falsework Location	L = Unsupported Length (ft)	Minimum Time (Curing Days)
Under slabs/decks, diaphragms, beams, caps, footings, etc.	L <10	7
	10 ≤ L ≤ 17	7 + (L−10)
	L > 17	14
Under cantilever portions of slabs/decks	L ≥ 1	7
	L < 1	1
Side forms	N/A	1
Caissons	N/A	1

805.08 CONCRETE SURFACE FINISHES. Classify surface finishes in accordance with table 805-8.

Table 805-8
Concrete Surface Finishes

Class 1	Ordinary Finish
Class 2	Rubbed Finish
Class 3	Special Finish
Class 4	Sandblast Finish
Class 5	Bridge Deck Finish
Class 6	Sidewalk Finish

Give all concrete a Class 1, Ordinary Finish, prior to and in addition to any other type of finish specified.

Give concrete a Class 2, Class 3, or Class 4 finish when specified.

Give bridge deck surfaces a Class 5, Bridge Deck Finish.

Give sidewalk surfaces a Class 6, Sidewalk Finish.

805.08.1 Class 1, Ordinary Finish: Remove fins and irregular projections from all surfaces. Clean and patch cavities produced by form ties, honeycombs, and other holes. Repair broken corners, edges, and other defects. Clean and patch air cavities (bug holes) of depths greater than 1/8 inch.

Cut form ties back at least 1/2 inch as described in 805.03.3. Fittings for metal ties shall be of such design that, upon their removal, cavities left will be of the smallest possible size. Grind fiberglass ties flush with the concrete surface.

Provide surfaces which are sound, true, uniform, and similar in color. For precast concrete, do not clean in a manner that destroys the glazed surface of concrete resulting from the use of metal forms.

Use concrete patch material from the Approved Materials List (AML) meeting the same design requirements as the concrete being patched. Patch material will be mixed, placed, and cured as per the manufacturer's technical data sheet.

Keep construction and expansion joints free of mortar and concrete. Leave joint filler exposed for its full length with clean and true edges.

Strike off exposed surfaces not protected by forms to a true, even surface. Do not use additional mortar to provide a grout finish.

On concrete below the final ground line, removal of fins and projections may be omitted. All other patching will be required.

805.08.2 Class 2, Rubbed Finish: Concrete surfaces to receive a Class 2 finish will be as specified in the plans.

Provide a surface finish that has a uniform smooth texture and color. Fill all holes and voids, including bug holes.

As soon as patching has sufficiently set, thoroughly saturate the exposed concrete surfaces with water and rub with a medium coarse carborundum stone. Continue rubbing until the surface has been ground to a paste, removing all form marks, irregularities, and projections. In this process, do not introduce any additive material other than water.

After rubbing has produced a smooth surface finish of uniform color, carefully brush the material which has been ground to a paste to a uniform texture, and allow it to reset under proper curing conditions. Carefully protect these surfaces from disfigurement and discoloration during subsequent construction operations.

Following stone rubbing and brushing, use a non-shrink epoxy grout to fill any remaining holes to produce a smooth surface of uniform color and texture.

805.08.3 Class 3, Special Finish: Concrete surfaces to receive a Class 3 finish will be as specified in the plans. When the plans call for both Class 2 and Class 3 finishes to be applied to the same surfaces, provide Class 2 finishing prior to Class 3 finishing for those surfaces. For existing concrete surfaces, patch and clean surfaces prior to applying Class 3 finish.

Provide a concrete coating material from the AML. Provide the same product from a single manufacturer for each structure. Apply special finish in accordance with the manufacturer's recommendations.

Provide a uniform color and texture at time of acceptance. Provide color in accordance with the color scheme specified in the plans or otherwise in accordance with 1011.03. Provide to the engineer color and texture samples on materials similar to application for acceptance prior to finishing.

805.08.4 Class 4, Sandblasted Finish: Concrete surfaces to receive a Class 4 finish will be as specified in the plans. After 28 curing days, sandblast the concrete surface with hard, sharp sand to produce an evenly fine grained surface in which mortar has been cut away, leaving aggregate exposed.

805.08.5 Class 5, Bridge Deck Finish:

805.08.5.1 Striking Off: After concrete is placed and consolidated according to 805.05, strike-off bridge decks with mechanical equipment having longitudinal and transverse shearing motion. Roller type screeds are not permitted. Consolidation by vibratory action of the finishing machine is not allowed. Keep a slight excess amount of concrete in front of the cutting

edge of the screed. Carry the excess amount of concrete to the edge of the placement or form and waste.

Mechanically screed the entire length of the bridge deck width with the exception of joint block outs and one foot from gutterlines. Submit for approval other locations requiring hand finishing.

Remove laitance and foreign materials brought to the surface during finishing operations.

Keep the addition of water to the surface of concrete to assist in finishing operations to an absolute minimum. Apply water to assist finishing operations as a fine mist from a pressurized sprayer.

805.08.5.1.1 Longitudinal Screed: Longitudinal screeds are allowed for simple spans bridge decks less than 50 feet in length. For spans between 30 and 50 feet in length, the screeds must be mechanically operated. Adjust the screed cutting edge to conform to the roadway profile. Strike-off bridge decks with a screed parallel to the centerline of roadway, resting on bulkheads or screed strips cut or set to required roadway cross-section.

805.08.5.1.2 Transverse Screed: Provide a transverse screed for simple spans 50 feet or greater in length and for continuous spans. Provide mechanical finishing machines that are power driven, traveling on rails set to achieve specified profile and screeds set to the cross-section. Perform a dry run to check header placement, deck thickness, and reinforcing steel cover.

805.08.5.2 Straightedging: After striking off, check the surface with an approved 10-foot metal static straightedge operated parallel to the centerline of the bridge. The surface shall show no deviation in excess of 1/8 inch from the testing edge of the straightedge. Correct deviations in excess of this requirement before final finishing. The checking operation shall progress by overlapping the straightedge at least one-half the length of the preceding pass. Correct major deviations by strike-off. Use the straightedge to correct minor deviations and as a checking device.

805.08.5.3 Final Texturing: After surface irregularities have been removed and a satisfactorily smooth surface obtained, give the concrete a uniformly textured final surface finish by use of a metal tine texturing device conforming to 601.03.1.13. Provide required texture by using either a mechanical or manual operation to propel metal tines. Provide grooves conforming to 601.03.9.8.

Grooves shall be transverse to the centerline of roadway and shall extend to within 1 foot of the gutter line. If grooves are applied too deep, micromilling or diamond grinding of the surface and re-grooving will be required at no additional cost to the Department.

Maintain the deck in surface saturated condition using foggers until application of curing compound.

805.08.6 Class 6, Sidewalk Finish: After concrete has been placed, consolidate and strike off the surface by means of a strike board and float. Use an edging tool on edges and at joints. Do not vary the surface by more than 1/8 inch under a 10-foot metal static straightedge. Provide the surface with a granular or matte texture.

805.09 PRECAST CONCRETE. Comply with 801.05. Provide shop drawings for precast concrete.

Provide a technician skilled in the specified precast systems that shall supervise the work and provide assistance to the engineer as necessary.

Furnish a concrete cylinder compression testing machine with a minimum 250,000 pound capacity complying with ASTM C39 along with all other necessary supplies and equipment. Furnish a surface resistivity meter conforming to DOTD TR 233. Furnish suitable testing facilities for use of this equipment. Calibrate equipment utilizing an accepted calibration service prior to initial use and at one year intervals thereafter. Recalibrate the equipment if it appears to be giving erratic results during use.

Hot weather concrete limitations as stipulated in 901.11.2 shall not be applicable for steam curing; however, precautions such as cooling of forms will be required.

805.09.1 Supervision and Inspection: The Department will inspect all precast concrete members.

Shop drawings in accordance with 801.05 shall be in the possession of the plant inspector at least two days prior to beginning fabrication. Provide access to all engaged parts of the plant during fabrication. Keep areas requiring inspection free of debris.

The fabrication, construction, and dimensional tolerances of prestressed members shall conform to the limits specified in the *Manual for Quality Control for Plants and Production of Precast-Prestressed Concrete Products (MNL-116-Latest Edition),* published by the Prestressed Concrete Institute, unless otherwise specified herein.

Furnish an office with at least 140 square feet of floor space for the Department personnel to perform necessary work. Provide additional office space as deemed necessary by the engineer. This office shall contain a desk, chair, and file cabinet with lock, telephone with dedicated line, electric lights, power outlets, high speed internet connection, shelves, and tables in the quantity required by the engineer. Provide the office with adequate heating,

ventilation, air conditioning, and convenient sanitary facilities with running water. Fabricator shall be responsible for paying all utility bills. This office shall be in good condition, located where there is not excessive noise with reasonable access to the fabrication area, and restricted for use by Department's inspectors only. Provide convenient and adequate reserved parking space.

805.09.2 Forms: Forms shall be in accordance with 805.03 as amended by this section.

Use steel forms. Seal bolted joints or seams to minimize seepage. For exterior girders, space bolted form joints to have no more than two bolted joints or seams per member.

Prior to placement of concrete and reinforcing steel, thoroughly clean forms and uniformly coat inside form surfaces with a form release agent from the AML. Maintain form surfaces clean and free from concrete build-up.

Prevent flash setting. Cool forms as required.

805.09.3 Handling and Placing Concrete: Handle and place concrete in accordance with 805.05 and Section 901, and as amended herein.

Do not deposit concrete in forms until the engineer has inspected reinforcement, conduits, anchorages, cleanliness of forms, and prestressing strands and given acceptance. Vibrate concrete to achieve consolidation. In addition to internal vibration, external vibration may be applied. Vibrate without displacement or excessive vibration of reinforcing, conduits, or strands.

At the time of initial set, rough float tops of prestressed beams by scrubbing transversely with a coarse wire brush to remove laitance and produce a roughened surface for future bonding. Roughen to average amplitude of 3/8 inch ± 1/8 inch.

805.09.4 Curing: Cure concrete in accordance with 805.06, Section 901, and as amended by this section.

Cure precast members for three curing days using steam method, wet method, or a combination of the two.

Furnish and install two recording thermometers reporting time-temperature relationship for each 200 feet of bed.

Use thermocouple cure for all Class P2 and P3 concrete or when specified in the contract.

805.09.4.1 Steam Cure Method: Contain steam under a suitable enclosure to minimize losses of moisture and heat. Allow initial set of concrete to take place prior to applying steam. Steam shall be at 100 percent relative humidity. Do not apply steam directly on concrete. During

application of steam, increase ambient air temperature at a rate not to exceed 40°F per hour until a uniform temperature not exceeding 160°F is reached. Continue steam curing at this temperature and maintain 100 percent relative humidity until concrete reaches release strength. At this time, steam curing may be discontinued in accordance with detensioning requirements.

805.09.4.2 Wet Cure Method: Wet cure in accordance with 805.06, as amended by 805.09.4.3.

805.09.4.3 Combined Steam and Wet Cure Method: Steam and wet cure methods may be used in combination to obtain the three curing days. Submit the procedure for transitioning from steam to wet cure to the Department for review and concurrence. Minimize the transition time.

805.09.4.4 Membrane Cure Method: Use as an interim short term curing method for plastic concrete. Steam or wet cure method shall be used once the concrete has set sufficiently to prevent marring the surface.

Maintain a surface saturated condition using foggers until application of the curing compound. Spray uniformly with a dissipating curing compound immediately after final finishing or texturing in accordance with 601.03.10. Exposed reinforcing steel and joints shall be covered or shielded to prevent contact with curing compound.

805.09.5 Finishing: After removal from forms and completion of curing, perform required repairs, finishing, and post-pour checks prior to storing members. Finish in accordance with 805.08.1. Repair minor defects with concrete patch materials from the AML.

805.09.6 Storage and Transportation: Prevent damage during storage, handling, and transportation of members. Replace damaged units.

Maintain girders in an upright position. Support girders within three feet of the end of the girder, unless otherwise specified. Support piles at lifting locations.

Upon detensioning, prestressed members may be moved to other locations in the fabrication yard for storage and curing.

Hold non-prestressed members at the plant after casting until concrete has attained the specified 28-day compressive strength and minimum cure time.

Hold prestressed members at the plant after casting until concrete has attained the specified 28-day compressive strength, and no less than 14 days for prestressed piles. Prestressed girders can be transported any time after reaching the specified 28-day compressive strength.

805.09.7 Prestressed Concrete:

805.09.7.1 Stressing Strand: Provide stressing strand in accordance with Section 1009.

Cut off ends of strands and coat with a low permeability epoxy paste and coat with a suitable asphalt material in accordance with the plans.

Provide load elongation curves showing elongation in inches per inch, and inches per 10 feet, from 0 to 80 percent of the minimum ultimate tensile strength.

Use the same strand type for similar members. Do not use strands that have been stressed.

805.09.7.2 Debond Sheathing: Provide sheathing with sufficient rigidity to prevent bonding of the pre-stressing strand and concrete. Sheathing shall have an inside diameter equal to the nominal strand diameter plus 1/8 inch and a wall thickness as thin as possible and sufficient to obtain the above requirements. Tape the joints between segments of sheathing to prevent leakage of concrete into the sheathing. Split sheathing will not be allowed.

805.09.7.3 Strand Tensioning Requirements

Prior to use in fabrication, calibrate jacks with their gauges using an approved independent calibration service. Provide a calibration certificate to the DOTD Construction Section. Recalibrate if a jack or gauge appears to be giving erratic results or if gauge pressure and elongations do not correlate.

Several members may be cast in a continuous line and stressed at one time. Leave sufficient space between ends of members to permit access for cutting strands after concrete has attained required strength. Leave sufficient free strand between concrete members to prevent member cracking during curing and detensioning.

Tension strands with calibrated equipment. If hydraulic jacks are used, equip them with gauges with graduations of 100 pounds and accurate within 2 percent of the specified force shown on the plans. Provide means for measuring elongation to the nearest 1/8 inch ± 1/16 inch.

Bring strands to a uniform initial tension shown on the shop drawing or agreed to with DOTD fabrication supervisor but at least 2,000 pounds prior to full tensioning. Measure this initial tension by gauge reading or other accepted means.

For final strand tensioning, measure strand force by elongation and then verify by gauge reading.

Provide elongation and tension force calculations to account for all losses (chuck seating, abutment rotation, full bed shortening, etc.) to achieve the specified force shown on the plans. Keep a record of strand elongation and jacking force for each strand.

A gauge reading jacking force greater than 5 percent of calculated force required based on elongation will initiate an investigation and corrective

action. In case of a discrepancy, place the error on the side of a slight overstress. Limit gauge reading jacking force to a temporary strand stress of no more than 81 percent of the specified strand tensile strength.

Detension each strand in accordance with the sequence shown on the shop drawings.

805.09.7.4 Strength Requirements: Make a minimum of seven test cylinders for Department use for acceptance testing. Make additional cylinders for quality control.

Cure cylinders using either match cure or thermocouple control cure (TCC) as required below.

Prior to detensioning, ensure that the least mature concrete placed in the member has reached the required release strength.

After 28 days, the Department will test two cylinders for acceptance. Both 28-day concrete cylinders must attain the minimum required strength or members involved are subject to rejection.

If all cylinders have been tested and concrete has not attained final required strength, acceptance will be made in accordance with the Department's manual titled *Application of Quality Assurance Specifications for Precast-Prestressed Concrete Plants.*

Place recording thermometers as follows: For girders, locate one thermometer at the center of gravity of the top flange and one at the center of gravity of the bottom flange. For piles, locate the thermometer midway between an outside corner of the pile and nearest edge of the center void. If a void is not provided, provide one thermometer at the center of gravity of the cross-section.

805.09.7.4.1 Match Cure: Cure cylinders in the same external curing environment as the member.

805.09.7.4.2 Thermocouple Control Cure (TCC) Cure cylinders in a calibrated device which mimics the internal temperature of the member. Furnish the necessary controls and equipment for maintaining cylinder temperature equal to the temperature in the precast concrete member.

Device shall provide a permanent graphical record of time versus temperature, rate of temperature change, and maximum and minimum temperatures. Use a maximum time interval of 15 minutes for graph.

805.09.7.5 Form Removal and Detensioning: Remove side forms once concrete has reached the specified release compressive strength. Detension strands after removal of side forms.

Detension strands before the internal concrete temperature has decreased to 20°F less than its highest peak temperature. Adding heat will be permitted to maintain the internal concrete temperature within the required range.

Detension strands such that lateral eccentricity of prestress will be a minimum in accordance with approved shop drawings.

805.09.8 Post-Tensioned Concrete: Post-tension in accordance with the plans, latest editions of the *AASHTO LRFD Design Specifications* and the *AASHTO Guide Specifications for Design and Construction of Segmental Concrete Bridges.*

805.09.8.1 Bonded Reinforcement: Provide post-tensioning steel bar/strand reinforcement to be bonded which is free of dirt, loose rust, grease, or other deleterious substances. Blow out ducts with compressed air until no water comes through the duct. Install reinforcement in ducts which are free of water, dirt, or other foreign substances. Stress reinforcement, grout ducts, and once grout has cured and reached the required strength, transfer post-tensioned forces to member.

805.09.8.2 Non-Bonded Reinforcement: Install post-tensioning steel bar/strand in flexible ducts cast in the member. After tensioning, grout the ducts to provide corrosion protection.

For members with draped strands, an open tap at low and high points of the duct may be necessary.

805.09.8.3 Grouting: Use grout conforming to ASTM C1107 and install using the latest edition of *AASHTO LRFD Design Specifications, AASHTO LRFD Construction Specifications,* and the *AASHTO Guide Specifications for Design and Construction of Segmental Concrete Bridges.*

Mold and cure grout cubes with the member and attain a compressive strength of at least 3000 psi prior to transfer of bond stress or end anchor release. Prepare and test grout cubes in accordance with ASTM C109.

805.10 MEASUREMENT. Quantities will be the design quantities as shown on the plans.

805.10.1 Structural Concrete: Quantities for structural concrete are computed from plan dimensions per cubic yard. The measured volume is the gross volume reduced by the volume displaced by chamfers with leg dimensions greater than 1.5 inches, expansion joint components and pile

embedments. Volumes deducted for embedded timber piling are based on 12 inches butt diameter and nominal dimensions for other pile types.

805.10.2 Concrete Surface Finish: Quantities for Class 2 Rubbed Finish, Class 3 Special Finish, and Class 4 Sandblast Finish will be measured per square foot.

Other concrete surface finishes will not be measured for payment.

805.10.3 Bridge Superstructure and Substructure: Quantities for bridge superstructure and substructure will be measured per square foot. Quantities will be based on the clear roadway width measured from gutter line to gutter line multiplied by the length of bridge measured from abutment joint to abutment joint.

805.10.4 Reinforced Concrete Box Culverts: Quantities for reinforced concrete box culverts of each size and type will be measured in place by the linear foot along the flow line between inside faces of the headwalls. For multiple barrel structures, the measured length will be the sum of the lengths of all barrels measured as described above.

Quantities for reinforced concrete box culvert headwalls will be measured per each. The quantity represents the headwall installation on one end of the box culvert regardless of the number of barrels.

805.11 PAYMENT.

805.11.1 Structural Concrete: Payment for structural concrete will be made at the contract unit price per cubic yard, adjusted in accordance with the following provisions.

Class A1, A2, A3, MASS(A1), MASS(A2), MASS(A3) and S concrete will be accepted on lot basis. Consider a lot to be an identifiable placement not exceeding 200 cubic yards of concrete. A placement of 200 to 400 cubic yards will be divided into two identifiable lots as equal in size as possible. A placement exceeding 400 cubic yards will be represented by three lots.

As a minimum, two random batches will be sampled for each lot, and three cylinders will be molded from each batch sampled. The cylinders will be tested for compressive strength in 28 to 31 calendar days. In the event of sudden cessation of operation, a minimum of three cylinders will constitute a lot.

Sampling, testing, acceptance, and payment will be in accordance with Section 901.

Formwork, falsework, bracing, concrete handling, placing, finishing and curing, and expansion joint fillers will not be measured for payment.

805.11.2 Concrete Surface Finishes: Payment for completed and accepted Class 2 Rubbed Finish, Class 3 Special Finish, and Class 4 Sandblast Finish will be made at the contract unit price per square foot which includes all materials, labor, equipment, and tools necessary to complete the item. Unless specified otherwise, payment for other concrete surface finishes will be included in the payment for the concrete receiving the corresponding finish.

805.11.3 Precast-Prestressed Girders: Payment will be at the contract unit price per linear foot which includes all work and appurtenances necessary for fabrication, storage, handling, transporting, and installation in accordance with the plans and shop drawings.

Miscellaneous steel and hardware not embedded in the girder are paid for as provided in Section 807. Bearings will be paid for as provided in Section 814.

805.11.4 Bridge Superstructure and Substructure: Payment will be made at the contract unit price per square foot, which includes the entire superstructure with railings and the portion of the substructure above the bottom of caps.

Cast-in-place concrete is subject to 805.11.1 and pay adjustments made in accordance with Table 901-4.

805.11.5 Reinforced Concrete Box Culverts: Payment for reinforced concrete box culverts will be made at the contract unit price per linear foot, which includes connections to existing structures, concrete, reinforcing steel, excavation, backfill, and all other items of material, labor, and equipment necessary to complete the work in accordance with the Contract.

Payment for reinforced concrete box culvert headwalls will be made at the contract unit price per each headwall which includes connections to existing structures, concrete, reinforcing steel, joint materials, excavation, backfill, and all other items of material, labor, and equipment necessary to complete the work in accordance with the Contract.

Cast-in-place concrete is subject to 805.11.1 and pay adjustments made in accordance with Table 901-4. Acceptance for each precast reinforced concrete box culvert will be in accordance with the latest version of ASTM C1577.

Payment will be made under:

Item No.	Pay Item	Pay Unit
805-01	Class A1 Concrete (Type)	Cubic Yard
805-02	Class A2 Concrete (Type)	Cubic Yard
805-03	Class A3 Concrete (Type)	Cubic Yard
805-04	Class MASS (A1) Concrete (Type)	Cubic Yard
805-05	Class MASS (A2) Concrete (Type)	Cubic Yard
805-06	Class MASS (A3) Concrete (Type)	Cubic Yard
805-07	Class S Concrete	Cubic Yard
805-08	Precast-Prestressed Concrete Girders (Type)	Linear Foot
805-09	Precast Concrete Members	Linear Foot
805-10	Precast Concrete Members	Square Foot
805-11	Precast Concrete Members	Each
805-12	Bridge Superstructure and Substructure (Type)	Square Foot
805-13	Reinforced Concrete Box Culverts (Cast-in-Place or Precast)(Size)	Linear Foot
805-14	Reinforced Concrete Box Culverts (Cast-in-Place)(Size)	Linear Foot
805-15	Reinforced Concrete Box Culverts (Precast)(Size)	Linear Foot
805-16	Reinforced Concrete Box Culverts (Extension)(Size)	Linear Foot
805-17	Reinforced Concrete Box Culvert Headwall	Each
805-18	Concrete Finish (Class)	Square Foot

Section 806
Deformed Reinforcing Steel

806.01 DESCRIPTION. Furnish and place reinforcing steel for reinforced concrete structures.

806.02 MATERIALS. Comply with Section 1009. Use accessories compatible with the reinforcement.

806.03 FABRICATION. Fabricate reinforcement to the shapes shown on the plans.

806.03.1 Bending: Cold bend reinforcement unless otherwise permitted. Do not rebend bars. Special fabrication will be required for bending No. 14 and 18 bars more than 90 degrees.

Bend bars around a pin having a diameter as specified in Table 806-1, unless otherwise specified:

Table 806-1
Pins for Bar Bends

Bar Size and Use	Minimum Pin Diameter
Nos. 3 through 5 – General	6.0 d_b
Nos. 3 through 5 – Stirrups and Ties	4.0 d_b
Nos. 6 through 8 – General	6.0 d_b
Nos. 9, 10 and 11	8.0 d_b
Nos. 14 and 18	10.0 d_b
	d_b=bar diameter

806.03.2 Tolerances: Fabricate bars in accordance with the tolerances specified in Table 806-2. All dimensions given in Table 806-2 are out-to-out of bars.

Table 806-2
Fabrication Tolerances

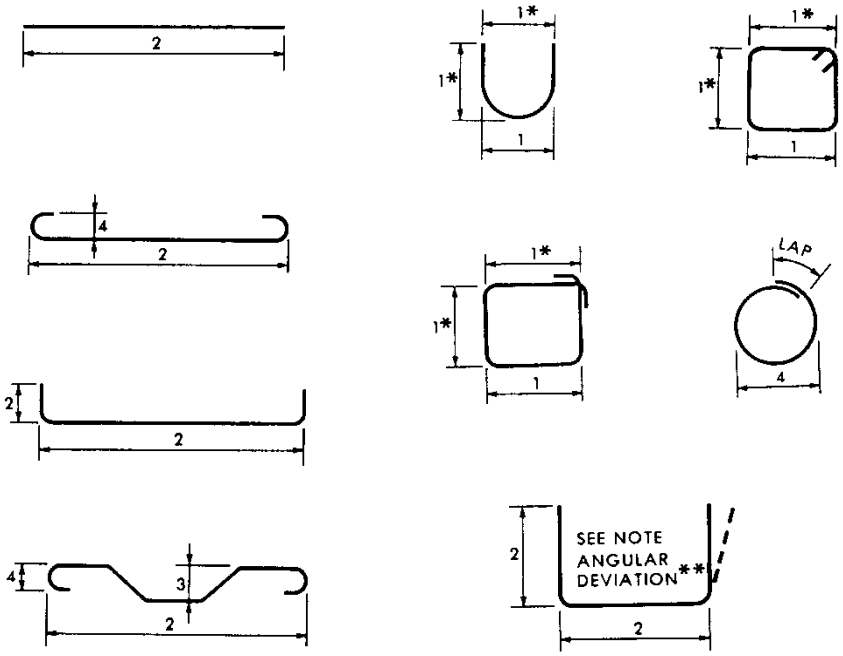

Symbol	Tolerance (inches)
1	± 1/2
2	± 1
3	+ 0, -1/2
4	± 1/2

*Not to differ for opposite parallel dimension by more than 1/2 inch.
**Angular Deviation-Maximum ± 2 1/2° or ± 1/2 inch/ft., but no less than 1/2 inch.

806.03.3 Shipping: Ship in standard bundles, tagged, and marked in accordance with the *Manual of Standard Practice of the Concrete Reinforcement Steel Institute* (CRSI). Make tags of durable material and legibly mark with waterproof markings. Attach at least one tag per bundle by wire. Show size of reinforcing, number of pieces, mark and length of bars on tags.

806.03.4 Handling and Coating Repairs: Handle reinforcing steel without damaging the reinforcing steel or coatings. Repair coatings to bars damaged or cut during field operations before rusting occurs in accordance with the manufacturer's recommendations.

806.04 MATERIAL STORAGE. Store reinforcing steel above ground on platforms, skids, or other supports to protect from damage and keep clean. At time of concrete placement, reinforcing steel shall be clean and damage free.

806.05 PLACING AND FASTENING. Provide reinforcing steel in the position shown on the plans. Support reinforcing steel during placing and setting of forms and concrete. Additional bracing may be required to handle reinforcing cages to prevent damage. Additional bracing may be required to support and stabilize reinforcing cages to prevent damage or collapse.

When placed in the work, reinforcement shall be free from dirt, loose rust, loose scale, paint, oil, grease, form release agent, or other foreign material. Thin powdery rust and light rust need not be removed. Do not field bend reinforcing steel unless specified on the plans or permitted by the engineer. Do not cut bars by burning.

Tie reinforcing steel with wire adequate to support the construction loads including erection of reinforcing steel cages and placement of concrete. In no case use less than a No. 16 gauge wire. Tie reinforcing steel at all intersections. When bar spacing is less than 1 foot in each direction tie alternate intersections, except for drilled shafts which require all intersections of vertical and horizontal bars to be tied.

Maintain distance of reinforcement from forms by use of metal chairs, ties, hangers, or other approved supports. Do not use pebbles, pieces of broken stone or brick, metal pipe, and wooden blocks as bar supports. Precast concrete blocks may be used when approved by the engineer in applications where concrete is to be placed against soil. When allowed, use concrete blocks meeting the requirements of the concrete placement.

Repair damaged coatings on bar supports (chairs) and accessories in accordance with manufacturer’s recommendations before rusting occurs.

806.06 SPLICING. Furnish reinforcement bars un-spliced to the full lengths indicated on the plans. Do not splice bars, except as indicated in the plans, without approval of the Engineer of Record. Maintain the minimum required clear distance to other bars and the specified concrete cover. Minimum required clear distance is three times the maximum aggregate size.

806.06.1 Lap Splices: Unless otherwise specified, provide lap splices in accordance with the requirements of Table 806-3. Do not place a construction joint within the limits of the lap splice. In lapped splices, place bars in contact and tie together. Stagger splices by at least one lap splice length when locations are not shown in the plans.

806.06.2 Mechanical Splices: When shown in the plans, make reinforcing steel splices with a mechanical splice listed in the AML and used in accordance with the manufacturer's recommendations. The mechanical splice shall develop in tension or compression, as required, at least 125 percent of the specified yield strength of the bars being spliced. Stagger mechanical splices to maintain proper minimum clear distances between bars and mechanical devices.

806.06.3 Welded Splices: Use welded splices only if detailed on the plans or if authorized by the Engineer of Record. Welding shall comply with Section 809. Stagger splices as far as possible. Do not use welded splices on coated reinforcing steel.

Table 806-3
Lap Splice Length for Grade 60 Steel

Bar No.	Lap Splice Length (inches)
3	46
4	61
5	77
6	92
7	107
8	122
9	138
10	155
11	172

806.07 MEASUREMENT. Quantities of deformed reinforcing steel will be the design quantities as specified on the plans. Design quantities are based on theoretical weights in accordance with ASTM A615 as shown in Table 806-4:

Table 806-4
Reinforcing Bar Weights

Bar No.	Weight Lb/Lin Ft
3	0.376
4	0.668
5	1.043
6	1.502
7	2.044
8	2.670
9	3.400
10	4.303
11	5.313
14	7.650
18	13.600

Measurement and payment of structural shapes used as reinforcement will be made in accordance with Section 807 Structural Metals on a lump sum basis.

Measurement and payment of mechanical splices will be based per each.

The following will not be measured for payment:

1. Reinforcement furnished for testing purposes.
2. Additional reinforcement used for laps in splices other than those shown on the plans.
3. Mechanical splices not shown on the plans.
4. Welded Splices.
5. Additional weight of reinforcement used at the contractor's request as substitutions for reinforcement shown on the plans.
6. Additional weight of reinforcement used for bracing and additional support.
7. Spacers, clips, bar supports (chairs), and other material used in installing reinforcement.
8. Additional weight of coating or cleaning and coating repair.

806.08 PAYMENT. Payment for reinforcing steel will include all labor, materials, testing, and equipment required to complete the accepted item.

Payment will be made at the contract unit price under:

Item No.	Pay Item	Pay Unit
806-01	Deformed Reinforcing Steel	Pound
806-02	Deformed Reinforcing Steel (Corrosion Resistant) (Type)	Pound
806-03	Deformed Reinforcing Steel Mechanical Splice	Each

Section 807
Structural Metals

807.01 DESCRIPTION. Fabricate, transport, and install structural metals.

807.02 MATERIALS. Conform to section 1013 except as amended herein.

ASTM A325 and A490 have been replaced by ASTM F3125. References to A325 and A490 are to be taken to mean ASTM F3125, Grade A325 and A490 respectively.

Provide AASHTO M270, Grade 50 steel, unless specified otherwise.

Provide high-strength ASTM A325 Type 1 mechanically galvanized fastener assemblies. Do not galvanize ASTM A490 bolts. Use high-strength Type 3 fastener assemblies with weathering steel.

Provide stainless steel anchor bolts, nuts and washers. Comply with 1013.08.4. When galvanized anchor bolts, nuts and washers are specified, hot dip galvanize in accordance with 811.08.1 and ASTM F2329.

807.03 SUBMITTALS. Comply with Section 801. Furnish working drawings in accordance with 801.05.

807.04 FABRICATION REQUIREMENTS.

807.04.1 Handling and Storing Materials: Store materials, plain or fabricated, at the shop and project site above ground on platforms, skids, or other supports. Keep materials free from dirt, grease, and other foreign matter and protect from corrosion.

Place and store girders and beams in the upright position. Support long members, such as columns and chords, on skids placed near enough together to prevent damage from deflection.

807.04.2 Shop Requirements: Use a fabrication shop possessing current AISC Structural Steel, AISC Component, and other certifications as required for the bridge elements being fabricated and type of work specified in the Contract. Provide the Chief Construction Engineer with documentation of all current fabricator certifications prior to beginning fabrication. Perform fabrication work requiring Departmental inspection at a location within the continental United States. Alternate certifications that exceed the requirements herein may be submitted to the Chief Construction Engineer for acceptance.

Provide sufficient lifting capacity, work space, and equipment to fabricate the required members. The cranes in each working area shall have a

combined rated capacity equal to the lifting weight of the heaviest assembly fabricated for shipment unless acceptable alternate lifting and turning facilities are provided. Provide lifting methods which prevent damage or overstress to the material.

Fabricate all elements in shops protected from adverse weather. The Fabrication Engineer may allow limited fabrication and welding outside the shop. Outside assembly of field connections may be allowed with prior approval.

Supply the Fabrication Engineer an office of at least 140 square foot floor space. Provide additional office space as deemed necessary by the engineer. This office shall contain a desk, chair, file cabinet with lock, telephone with dedicated line, electric lights, power outlets, high speed internet connection, shelves, and tables in the quantity required by the engineer. Provide the office with adequate heating, ventilation, air conditioning, and convenient sanitary facilities with running water. Fabricator shall be responsible for paying all utility bills. This office shall be in good condition, located where there is not excessive noise, and restricted for use by Department's inspectors only. Provide convenient and adequate reserved parking space.

807.04.3 Inspection: Inspection may be conducted before, during, and after fabrication. Materials and workmanship which are in the process of being fabricated and found to contain defects or have been subjected to damaging fabrication procedures will be rejected while still in process. The inspector has the right to require testing of materials and/or workmanship, even if materials and/or workmanship are in excess of code requirements.

If defects in materials or workmanship are found by additional testing required by the inspector, the additional test will be at no additional cost to the Department. If no defects are found, the Department will compensate the contractor for the additional testing.

Furnish equipment, certified technicians, and required materials for all required testing of materials and workmanship.

807.04.3.1 Mill Inspection: Structural metals will be inspected as deemed necessary by the engineer. Prior to fabrication, submit for review to the Chief Construction Engineer two copies of Material Test Reports and a notarized "Fabricator's Material Statement and Certificate of Compliance" which verifies compliance and traceability. When appropriate, a Buy America statement shall be included on the "Fabricator's Material Statement and Certificate of Compliance."

807.04.3.2 Shop Inspection: Provide the engineer free and safe access at all times to all portions of shops where work is being done. Present

a schedule of fabrication including shop location and contact information to the Chief Construction Engineer at least 30 days in advance of commencing work. Maintain an updated 30-day look ahead schedule.

Provide a Quality Assurance Program which ensures the products conform to the requirements of the contract and all applicable codes. Provide inspectors meeting the requirements specified in the latest edition of ANSI/AASHTO/AWS D1.5 as appropriate. The fabricator's inspection shall be an independent and separate function from all other functions.

The Department retains the right to exercise oversight and require changes to the contractor's Quality Assurance Program. The Department retains the right to inspect all fabrication, pre-assembly, castings, and other metal items. The Department's inspection does not relieve the contractor of responsibility to perform Quality Control.

807.04.3.3 Field Inspection: Structural metals will be inspected as deemed necessary by the engineer to verify conformance with the plans, specifications, and working drawings. Fabricated members having field work performed that does not conform to the plans, specifications, or previously reviewed and accepted working drawings will be subject to rejection.

807.04.4 Marking: Provide temporary markings on each member piece to provide material traceability throughout fabrication. When galvanizing is specified, use a felt tip paint marker that will not be visible through or bleed through galvanizing coating.

Provide permanent piece markings immediately upon start of fabrication at one location for each member. Accomplish steel die stamping with low-stress steel stamps having a minimum face character radius of 0.010 inch and a maximum impression depth of 0.010 inch. Impressions shall not be placed within 1 inch of plate edge.

In case of doubt as to the grade of metal being used, samples will be taken and tested as directed by the Department's inspector.

807.04.5 Straightening, Cambering, and Curving Materials and Members:

807.04.5.1 Straightening Material: Prior to fabrication, rolled material shall be straight. If straightening is necessary, permission from the Fabrication Engineer is required.

Sharp kinks and bends will be cause for rejection of the material.

Heat straighten AASHTO M270, Grades HPS 70W and HPS 100W steels under rigidly controlled procedures. Each application requires permission from the Fabrication Engineer. Do not allow the maximum temperature of the

steel to exceed 1100°F. If using normalizing, complete straightening of steel plates before normalizing operations begin for tension member material.

For all other steels with specified yield points less than 70,000 psi, the temperature of heating area shall not exceed 1200°F as controlled by pyrometers or temperature-indicating crayons.

807.04.5.2 Straightening of Members: Do not use artificial cooling method unless permitted by the Fabrication Engineer.

807.04.5.3 Camber for Welded Plate Girders and Rolled Beams: Camber members before heat curving.

Camber welded plate girders by cutting camber into webs.

Camber rolled beams using either heat methods or cold bending methods. Submit methods and procedures to the Fabrication Engineer for review. Show accepted details and procedures on submitted shop drawings. When using heat, the temperature of heating area shall not exceed 1100°F as controlled by pyrometers or temperature-indicating crayons. After cambering, allow the beam to air cool. Do not quench.

Camber members in accordance with the plans.

807.04.5.4 Curving Welded Plate Girders and Rolled Beams:

807.04.5.4.1 Materials: Do not heat curve steels that are manufactured to a specified yield point greater than 70,000 psi. Heat curving will not be permitted for those portions of girders where span base line radius of curvature is 200 feet or less.

807.04.5.4.2 Type of Heating: Beams and girders may be curved by either continuous or V-type heating, as permitted by the Fabrication Engineer and shall be in accordance with the latest version of the *AASHTO LRFD Bridge Construction Specifications*.

807.04.6 Finish: Neatly finish all edges in accordance with the latest version of the *AASHTO LRFD Bridge Construction Specifications*. Neat finish is defined as a surface without irregularities such as burrs, sharp edges, slag, and voids.

807.04.6.1 Facing of Bearing Surfaces: The surface finish of bearings, base plates, and other bearing surfaces that are to come in contact with each other or with concrete shall comply with the surface finish of Table 807-1 and ANSI B 46.1, Surface Roughness, Waviness, and Lay, Part 1.

Table 807-1
Bearing Surface Finish

Surface	Surface Finish, μ in
Steel slabs	2000
Heavy plates in contact in shoes to be welded	1000
Milled ends of compression members, milled or ground ends of stiffeners and fillers	500
Bridge rollers and rockers	250
Pins and pin holes	125
Sliding bearings	125
All other surfaces	500

807.04.6.2 Abutting Joints: Abutting joints in compression members, girder flanges, and tension members shall be faced and brought to an even bearing when specified. When joints are not faced, the opening shall not exceed 1/4 inch.

807.04.7 Bolt Holes: Provide bolt holes with dimensions conforming to Table 807-2.

Drill holes full-size, or subsize, and ream holes. Subsize holes by subdrilling or subpunching. Thermal forming of holes will not be permitted.

After holes are finalized, remove burrs and shavings. The member shall be free from twists, bends, and other deformation. Submit proposed repair procedures to the Fabrication Engineer for review. Initiate repairs upon acceptance of submitted repair procedure.

807.04.7.1 Forming Holes: Provide standard holes and oversize holes that are cylindrical and perpendicular to the component. Provide slotted hole edges that are perpendicular to the component.

In material composed of five or less plates and having a total thickness of 5/8 inch or less, form holes by drilling full-size, or subsizing and reaming.

In material composed of more than five plates or having a total thickness of greater than 5/8 inch, form holes by subsizing and reaming, or drill full-size while components are assembled and held in proper position.

In milled-to-bear connections, assemble connection components and hold in proper bearing position while either reaming subsize holes to full-size or drilling full-size holes.

In connections which are not milled-to-bear, use any of the following methods to finalize holes:

1. Assemble connection components and hold in proper position while either reaming subsize holes to full-size or drilling full-size holes.

2. Use a secured steel template to drill full-size holes.

3. Use numerically-controlled drilling to drill full-size holes.

Connection plates and splice plates may be used as templates for one time use. Use bushings in templates for multiple use.

Provide subsize holes having a diameter 3/16 inch smaller than the nominal bolt diameter. Diameter of the die shall not exceed diameter of the punch by more than 1/16 inch. Provide clean cut holes without leaving torn or ragged edges.

807.04.7.2 Use of Oversize and Slotted Holes: When specified or approved, oversize, short-slotted, and long-slotted holes may be used with high strength bolts having a nominal diameter of 5/8 inch and larger except as follows:

1. Oversize holes may be used in all plies of friction-type connections. Hardened washers shall be installed over exposed oversize holes.

2. Short-slotted holes may be used in all plies of friction-type or bearing-type connections. In friction-type connections, short-slotted holes may be oriented without regard to direction of loading. In bearing-type connections, the long dimension of short-slotted holes shall be transverse to the direction of loading. Install hardened washers over exposed short-slotted holes.

3. Long-slotted holes may be used in only one of the connected parts of either a friction-type or bearing-type connection at an individual faying surface. In friction-type connections, long-slotted holes may be oriented without regard to direction of loading. In bearing-type connections, the long dimension of the long-slotted holes shall be transverse to the direction of loading.

4. Install structural plate washers or continuous bars not less than 5/16 inch thick over long slots that are in the outer plies of joints. These washers or bars shall have a size sufficient to completely cover the slot after installation. If requiring hardened washers, place them over the plate washers or bars.

5. When oversize or slotted holes are used, the distances between edges of adjacent holes or edges of holes and edges of members shall not be less than that permitted with standard size holes.

Table 807-2
Bolt Hole Dimensions

Bolt Diameter, d (inch)	Standard Hole Diameter (inch)	Oversize Hole Dimension (inch)	Short-Slotted Hole Dimensions		Long-Slotted Hole Dimensions	
			Width (inch)	Length (inch)	Width (inch)	Length (inch)
$^{1}/_{2}$	$^{9}/_{16}$	N/A	N/A	N/A	N/A	N/A
$^{5}/_{8}$	$^{11}/_{16}$	$^{13}/_{16}$	$^{11}/_{16}$	$^{7}/_{8}$	$^{11}/_{16}$	$1^{9}/_{16}$
$^{3}/_{4}$	$^{13}/_{16}$	$^{15}/_{16}$	$^{13}/_{16}$	1	$^{13}/_{16}$	$1^{7}/_{8}$
$^{7}/_{8}$	$^{15}/_{16}$	$1^{1}/_{16}$	$^{15}/_{16}$	$1^{1}/_{8}$	$^{15}/_{16}$	$2^{3}/_{16}$
1	$1^{1}/_{16}$	$1^{1}/_{4}$	$1^{1}/_{16}$	$1^{5}/_{16}$	$1^{1}/_{16}$	$2^{1}/_{2}$
$\geq 1^{1}/_{8}$	d $+^{1}/_{16}$	d $+^{5}/_{16}$	d $+^{1}/_{16}$	d $+^{3}/_{8}$	d $+^{1}/_{16}$	2.5d

807.04.7.3 Accuracy of Forming and Location: Poor matching of holes and holes that are not perpendicular to the component will be rejected.

1. Subsize Holes: Accurately locate holes such that after assembly, and before any reaming is done, a cylindrical pin with diameter 1/8 inch smaller than the nominal size of the hole may be entered perpendicular to the face of the member, without drifting, in at least 75 percent of the contiguous holes in the same plane. Failure of a hole to pass a pin with diameter 3/16 inch smaller than the nominal size of the hole will be cause for rejection.

2. Full-Size Holes: Accurately locate holes such that after assembly 85 percent of the holes in any contiguous group show no offset greater than 1/32 inch between adjacent thicknesses of metal.

807.04.8 Shop Assembly: Use Full or Progressive Assembly methods unless otherwise specified.

Place milled-to-bear ends of members in full bearing prior to drilling or reaming holes for connection.

When full-size holes are formed prior to assembly, assemble components, and verify and document that assemblies conform to plans and shop drawings, including camber, alignment, accuracy of holes, and fit of milled joints.

When holes are to be formed or finalized in assembled components, assemble components, and verify and document that assemblies conform to plans and shop drawings, including camber, alignment, accuracy of holes, and fit of milled joints prior to finalizing holes.

Submit documentation verifying assembly conformance to the Fabrication Engineer for review. Upon acceptance the assembly may be dismantled.

Match-mark assembled components in accordance with 807.04.4 and submit a diagram showing such marks to the Fabrication Engineer for record.

807.04.8.1 Full Girder or Truss Assembly: Assemble all members of each continuous beam line, plate girder, truss, arch rib, bent, tower face, or rigid frame at one time.

807.04.8.2 Progressive Girder or Truss Assembly: Progressive Girder Assembly consists of initially assembling at least three contiguous shop sections of each continuous beam line, plate girder, or arch rib.

Progressive Truss Assembly consists of initially assembling at least three contiguous panels for each truss, bent, tower face, or rigid frame, but no less than the number of panels associated with three contiguous chord lengths.

For both cases, successive assemblies consist of at least one section or panel of the previous assembly (repositioned, if necessary, and adequately pinned to assure accurate alignment) plus two or more sections or panels added at the advancing end. In the case of structures longer than 150 feet, each assembly shall be at least 150 feet long regardless of the length of individual continuous panels or sections. At the option of the fabricator, sequence of assembly may start from any location in the structure and proceed in one or both directions so long as the preceding requirements are satisfied.

Assemblies consisting of less than three shop sections or panels require approval of the engineer.

807.04.8.3 Full Chord Assembly: Assemble with geometric angles at the joints the full length of each chord of each truss or open spandrel arch, or each leg of each bent or tower. Ream web member connections using steel templates set at geometric (not cambered) angular relation to the chord line.

Mill or scribe at least one end of each web member normal to the longitudinal axis of the member. Accurately locate the templates at both ends of the member from one of the milled ends or scribed lines.

807.04.8.4 Progressive Chord Assembly: Assemble contiguous chord members in the manner specified for Full Chord Assembly and in the number and length specified for Progressive Girder or Truss Assembly.

807.04.8.5 Special Girder Assembly: Assemble rolled beams or plate girders in pairs when they are part of a simply supported span having horizontal curvature, skew, or superelevation. Assemble with floor system, lateral bracing, and cross frames on blocking, with the proper camber and relative elevation, and provide proper fittings of all parts during field erection.

807.04.8.6 Special Full Structure Assembly: Assemble the entire structure, including the floor system, for structures having curved girders or skews when in combination with grade or camber.

807.04.8.7 Bearing Assembly: Completely assemble bearing components, check accuracy of fit, and match-mark for shipping.

807.04.9 Plate Cut Edges:

807.04.9.1 Edge Planing: Sheared edges of plates more than 5/8 inch thick and carrying calculated stress shall be planed, milled, ground or thermal cut to remove a minimum of 1/4 inch. Radius reentrant corners to 3/4 inch minimum before cutting.

807.04.9.2 Visual Inspection and Repair: Visually inspect and repair plate cut edges in accordance with the latest edition of *ANSI/AASHTO/AWS D1.5 Bridge Welding Code*.

807.04.10 Shop Welding: Comply with Section 809.

807.04.11 End Connection Angles: Construct floor beams, stringers, and girders having end connection angles to specified length (+0, −1/16 inch) between heels of connection angles. If continuity is required, end connections shall be faced. Thickness of connection angles shall not be less than 3/8 inch or less than plan thickness after facing.

807.04.12 Lacing Bars: Ends of lacing bars shall be neatly rounded.

807.04.13 Direction of Rolling and Stress: Cut and fabricate steel plates and splice plates for primary members so that the direction of rolling is parallel to the direction of the main tensile and compressive stresses.

807.04.14 Bent Plates: Cold-bending of fracture-critical steels and fracture-critical members is prohibited.

Bend plates at right angles to the direction of rolling for unwelded, cold-bent, load-carrying members. Cold-bent ribs for orthotropic-deck bridges may be bent in the direction of rolling, if permitted.

Bending shall be such that no cracking of the plate occurs. Minimum bend radii, measured to the concave face of the metal, are shown in Table 807-3.

Table 807-3
Steel Plate Minimum Cold Bending Inside Radius

Plate Thickness, t (inch)	M270 Grades 36, 50, 50S, 50W, HPS 50W, and HPS 70W Minimum Bend Radius
Up to 0.50	2.0 t
Over 0.50 to 1.00	2.5 t
Over 1.00 to 1.50	3.0 t
Over 1.50 to 2.50	3.5 t
Over 2.50 to 4.00	4.0 t

For grades not included in Table 807-3, follow minimum bend radii specified in the latest *AASHTO LRFD Bridge Construction Specifications* or larger radii if recommended by the plate producer.

If shorter radii are required, hot bend plates at a temperature no greater than 1100°F. Hot-bent plates shall conform to the requirements for cold-bent plates.

Before bending, round off plate edges to a radius of 1/16 inch throughout the portion of the plate to be bent.

807.04.15 Stiffeners: Clip lower inside corner of transverse stiffeners at least 1.5 inch, and terminate longitudinal stiffeners at least 1.0 inch short of transverse stiffeners to facilitate drainage.

Bearing stiffeners of girders and stiffeners intended as supports for concentrated loads shall have full bearing (either milled, ground, or welded, as specified) on the flanges. Stiffeners not intended to support concentrated loads shall have a tight fit unless otherwise shown on the plans.

Do not weld transversely across tension flanges of beams or girders unless shown on the plans.

807.04.16 Eyebars: Fabrication shall comply with the latest *AASHTO LRFD Bridge Construction Specifications*. No welding is allowed on eye bars or to secure adjacent eye bars.

807.04.17 Stress Relieving: When specified, stress-relieve members in accordance with AWS.

807.04.18 Pins and Rollers: Pins and rollers shall be accurately turned to specified dimensions and shall be straight, smooth, and free from flaws. Finish in accordance with Table 807-1.

Forge and anneal pins and rollers more than 9 inches in diameter. Pins and rollers 9 inches or less in diameter may be either forged and annealed or cold-finished carbon-steel shafting.

In pins larger than 9 inches in diameter, bore a hole not less than 2 inches in diameter full length along the axis after the forging has been allowed to cool to a temperature below the critical range under suitable conditions to prevent damage by too rapid cooling and before being annealed.

807.04.19 Boring Pin Holes: Bore pin holes true to specified diameter, smooth and straight, at right angles with the axis of the member and parallel with each other. Produce the final surface by a finishing cut. Finish in accordance with Table 807-1.

Pin hole diameter shall not exceed pin diameter by more than 0.020 inch for pin diameters of 5 inches or less, and 0.03125 inch for larger pins.

The distance outside-to-outside of end holes in tension members and

inside-to-inside of end holes in compression members shall not vary from that specified more than 0.03125 inch. Bore holes in built-up members after the member has been assembled.

807.04.20 Screw Threads: Threads for bolts and pins for structural steel construction shall comply with the *Unified Standard Series UNC/ANSI B1.1*, Class 2A for external threads and Class 2B for internal threads. Pin ends having a diameter of 1.375 inch or more shall be threaded six threads per inch.

807.04.21 Pilot and Driving Nuts: Furnish two pilot nuts and two driving nuts for each size pin.

807.04.22 Marking and Shipping: Adhere to 105.12 when shipping material.

Paint or mark each member with an erection mark for identification in accordance with 807.04.4. Furnish an erection diagram with erection marks shown thereon. Members weighing more than three tons shall have weights marked thereon. A list and description of packaged materials shall be plainly marked on the outside of each shipping container.

Load, transport, and erect structural members in accordance with the accepted transportation and erection plan. Transport girders and beams in the upright position. Prevent excessive stress and deformation in members.

Ship pins, small parts, and packages of bolts, washers, and nuts in boxes, crates, kegs, or barrels, but the gross weight of any package shall not exceed 300 pounds.

Submit for record to the engineer as many copies of material orders, shipping statements and erection diagrams as directed. Show weights of individual members on the statements.

807.04.23 Bridge Deck Joints: Pair joint assemblies and fit before shipping. Plates, angles, or other structural shapes shall be accurately fabricated at the shop to conform to the specifications. Provide surfaces in the finished plane that are true and free of warping. Galvanize after fabrication unless otherwise specified.

807.04.24 Shear Connectors: Shear connectors may be either 3/4 inch or 7/8 inch diameter. Comply with the requirements of Section 7, Stud Welding of the latest edition of *ANSI/AASHTO/AWS/D1.5 Bridge Welding Code*.

When shear connectors are applied on painted surfaces, remove paint from surfaces to receive shear connectors to provide a clean circular area having twice the shear stud diameter. Clean circular areas in accordance with AWS prior to attachment. Do not remove paint within 2 inches of edge of the flange.

807.04.25 Shop Painting: Comply with Section 811.

807.05 ASSEMBLY AND ERECTION. Follow the accepted erection plan. Accurately assemble parts and follow all match-marks. Do not use tools that will damage or distort members. Clean bearing surfaces and permanent contact surfaces before members are assembled.

Install splices and field connections with at least 50 percent of the holes filled with bolts (either erection or untorqued permanent bolts) and cylindrical erection pins. Fill at least 10 percent of the holes with cylindrical erection pins for fit-up and alignment. Splices and connections carrying traffic during erection shall have at least 75 percent of the holes filled. Main member splices shall have all holes filled with bolts and cylindrical erection pins (half bolts and half pins) for fit-up and alignment.

Unless erected by the cantilever method, erect truss spans on blocking to give the trusses proper camber. Leave blocking in place until tension chord splices and all other truss connections are pinned and bolted. Tighten permanent bolts in splices of butt joints of compression members after the structure is in final position.

Use erection bolts of the same nominal diameter as permanent bolts and cylindrical erection pins with a 1/32 inch larger diameter. Drift holes into position during erection without enlarging holes or distorting metal.

Perform permanent bolting in accordance with 807.05.2.

807.05.1 Bolts:

807.05.1.1 High-Strength Bolts:

Assemble structural joints using ASTM A325 or A490 high-strength steel bolts tightened to the specified tension.

All bolts, nuts, washers, and direct tension indicator devices within a connection shall be of the same respective type and manufacturer.

Marking of bolts, nuts, and washers shall comply with Figure 807-1.

Figure 807-1
Markings

Type	A325 Assembly		A490 Assembly	
	Bolt	A563 Nut	Bolt	A563 Nut
1	 XYZ = Manufacturer Mark	 Grade Mark DH or 2H*		 Grade Mark DH or 2H*
3	 Note Mandatory Underline	 Grade Mark DH3	 Note Mandatory Underline	 Grade Mark DH3

*Grade 2H, plain finish, per ASTM A194 (A194 M).

ASTM A325 and A490 bolts shall have the heads marked "A325 or A490" and shall also be marked identifying the manufacturer. Type 3 bolts shall have the "A325" and "A490" underlined.

ASTM A563 nuts shall be marked identifying manufacturer. Type 1 nuts shall be marked with the grade symbol "DH" or "2H." Type 3 nuts shall be marked with the grade symbol "DH3." Nuts may be washer faced or doubled chamfered.

Washers shall be marked identifying the manufacturer. Type 3 washers shall be marked with the symbol "3."

Determine bolt length by adding to the grip the following lengths and rounding up as specified herein. The grip is the total thickness of all connected material, including filler plates. Provide bolt length resulting in no less than two threads extending beyond the nut after final tensioning.

Add length from Table 807-4. Add 5/32 inch for each hardened flat washer. Add 5/16 inch for each beveled washer. Add length required for other devices such as DTIs, structural plate washers, continuous bars, etc. Round up to nearest 1/4 inch for bolt lengths less than 4 inches. Round up to nearest 1/2 inch for bolt lengths of 4 inch and greater.

The values in Table 807-4 are taken from the Research Council on Structural Connections as values that provide appropriate allowances for manufacturing tolerances and sufficient thread engagement with an installed heavy-hex nut.

Table 807-4
Bolt Length Determination

Bolt Diameter (inch)	* Length to Add to Grip (inch)
$^{1}/_{2}$	$^{11}/_{16}$
$^{5}/_{8}$	$^{7}/_{8}$
$^{3}/_{4}$	1
$^{7}/_{8}$	$1^{1}/_{8}$
1	$1^{1}/_{4}$
$1^{1}/_{8}$	$1^{1}/_{2}$
$1^{1}/_{4}$	$1^{5}/_{8}$
$1^{3}/_{8}$	$1^{3}/_{4}$
$1^{1}/_{2}$	$1^{7}/_{8}$

* Does not include length required for washers, DTIs, etc. See specifications.

807.05.1.2 Turned Bolts: Turned bolts shall be in accordance with Section 821.07.12 for mechanical applications. For other applications, turned bolts shall be in accordance with the following unless otherwise specified.

Provide single self-locking nuts or double nuts.

The surface of the body of turned bolts shall meet the ANSI B 46.1 roughness rating value of 125 μ inch. Heads and nuts shall be hexagonal with standard dimensions for bolts of the specified nominal size or the next larger nominal size. Diameter of threads shall be equal to the body of the bolt or the nominal diameter of the bolt. Carefully ream holes for turned bolts and furnish specified bolts to provide for a light driving fit. Threads shall be entirely outside of holes. Provide a washer under the nut.

807.05.1.3 Ribbed Bolts: Ribbed bolts shall be unfinished and comply with ASTM A307, Grade A.

Provide single self-locking nuts or double nuts.

The body of ribbed bolts shall be an approved form with continuous longitudinal ribs. The diameter of the body measured on a circle through the

points of the ribs shall be 5/64 inch greater than the nominal diameter of the specified bolt.

Furnish ribbed bolts with round heads complying with ANSI B18.5. Nuts shall be hexagonal and either recessed or with a washer of suitable thickness. Ribbed bolts shall make a driving fit with the holes. Hardness of the ribs shall be such that the ribs do not permit the bolts to turn in the holes during tightening. If the bolt twists before drawing tight, carefully ream the hole and use an oversized bolt.

807.05.2 Bolted Connections: A fastener or fastener assembly is composed of bolt, nut, washers, and, if applicable, a direct tension indicator (DTI) device. Use new and unused fastener assemblies in installation and testing.

807.05.2.1 Rotational Capacity Testing: Rotational capacity tests are required and shall be performed on all Type 1, Type 3, and galvanized (after galvanizing) fastener assemblies by the manufacturer or distributor prior to shipping and by the contractor at the jobsite prior to installation. For installations utilizing DTIs, the requirement for rotational capacity testing by the contractor at the job site is dependent on results obtained during DTI Pre-Installation Verification.

Perform Rotational Capacity Test as specified herein. Test all combinations of bolt production lot, nut lot, and flat hardened washer lot used as an assembly representative of the surface and lubrication condition at time of installation. Do not use DTIs in the test assemblies. Flat hardened washers are required as part of the test even if not required as part of the installation fastener assembly. Assign a rotational capacity lot number to each combination of lots tested.

The minimum frequency of testing shall be two fastener assemblies per rotational capacity lot. Fastener assembly components shall be new and unused prior to testing and discarded after testing.

Use a dial type torque wrench. No multipliers will be allowed.

Install fasteners such that 3 to 5 full threads of the bolt are located between the bearing surfaces of the bolt head and nut. Restrain the bolt head from turning during nut rotation.

Test fastener assemblies in a Skidmore-Wilhelm Calibrator or an acceptable equivalent tension measuring device using Method 1. For fastener assemblies too short to be tested in a tension measuring device, use Method 2.

Minimum Required Tension (MRT) used for testing fastener assemblies is provided in Table 807-5 and is based on 70 percent of the specified minimum strength of bolts.

807.05.2.1.1 Method 1:

1. Tension fastener assembly to Initial Tension in accordance with Table 807-5. Mark the position of the nut with respect to the bolt for reference.

Table 807-5
Rotational Capacity Testing

ASTM A325 Bolts			
Bolt Diameter (inch)	Initial Tension (kip)[1]	MRT (kip)	115% x MRT (kip)
$^1/_2$	1	12	14
$^5/_8$	2	19	22
$^3/_4$	3	28	32
$^7/_8$	4	39	45
1	5	51	59
$1^1/_8$	6	56	64
$1^1/_4$	7	71	82
$1^3/_8$	9	85	98
$1^1/_2$	10	103	118
ASTM A490 Bolts			
Bolt Diameter (inch)	Initial Tension (kip)[1]	MRT (kip)	115% x MRT (kip)
$^1/_2$	2	15	17
$^5/_8$	2	24	28
$^3/_4$	4	35	40
7/8	5	49	56
1	6	64	74
$1^1/_8$	8	80	92
$1^1/_4$	10	102	117
$1^3/_8$	12	121	139
$1^1/_2$	15	148	170

[1] Approximately 10 percent of MRT.

2. Tension fastener assembly until the Test Rotation in Table 807-6 is reached and record the measured torque and tension.

Table 807-6
Test Rotation from Initial Tension

Test Rotation	Bolt Length
240° ($^2/_3$ turn)	≤4 diameters
360° (1 turn)	>4 diameters and ≤8 diameters
480° ($1^1/_3$ turn)	>8 diameters and ≤12 diameters
420° ($1^1/_6$ turn)	>12 diameters (A490 Only)

3. The measured torque value shall not exceed the following:

$$Torque < 0.25PD \ (foot\ pound)$$

Where: P = *measured bolt tension, pound*
D = *bolt diameter, feet*

4. The measured tension reached at the Test Rotation shall be equal to or greater than 115 percent of MRT in accordance with Table 807-5.

807.05.2.1.2 Method 2:

Bolts that are too short to test in a tension measuring device may be tested in a steel joint. The hole in the joint shall have the nominal diameter of the bolt hole in the work.

1. Determine the Initial Torque by tensioning a bolt of the minimum length accepted in the tension measuring device to Initial Tension in accordance with Table 807-5 and record the torque measured. Use the measured torque as the Initial Torque.
2. Tension the short fastener assembly to the Initial Torque in the steel joint. Mark the position of the nut with respect to the bolt for reference.
3. Tension the short fastener assembly until the Test Rotation in Table 807-6 is reached and record the measured torque.
4. The measured torque reached at the Test Rotation shall not exceed the following:

$$Torque < 0.25PD \ (foot\ pound)$$

Where: P = *115 percent of MRT, pound (refer to Table 807-5)*
D = *bolt diameter, feet*

807.05.2.1.3 Acceptance Criteria: The fastener assembly will be considered non-conforming if any of the following occur:

1. Inability to install the assembly to the nut rotation in Method 1 or 2 as applicable.
2. Exceeding the torque limit in Method 1 or 2 as applicable.
3. Inability to meet tension requirement in Method 1.

4. Inability to remove the nut after reaching the Test Rotation.

5. Shear failure of bolt or nut threads as determined by visual examination following removal.

6. Torsional or torsional/tension failure of the bolt. Expect elongation of the bolt in the threads between the bearing face of the nut and the bolt head at Test Rotation; do not classify such elongation as a failure.

807.05.2.2 Submittals: Prior to final installation, submit for record the following to the Project Engineer:

1. Mill Test Report for all mill steel used in the manufacture of the bolts, nuts, washers, and DTI devices. Reports shall include the place where the material was melted and manufactured.

2. Manufacturer's Report providing the following:

a. Lot number of each item tested

b. Rotational capacity lot number

c. Rotational capacity tests results

d. Certification that all items are in compliance with project and ASTM specifications

e. Location of manufacture of fastener assembly components

3. Coating Report containing the type, thickness, location of application, and compliance with the appropriate specifications

4. Installer's Report providing the following:

a. Lot number of each item tested

b. Rotational capacity lot number

c. Rotational capacity tests results

d. Installation Test in accordance with 807.05.2.5.

807.05.2.3 Shipping Fasteners: Permanently mark all containers with the manufacturer lot number and the rotational capacity lot number such that identification will be possible at any stage prior to installation.

807.05.2.4 Bolted Parts: Surfaces of bolted parts in contact with the bolt head or nut shall not have a slope of more than 1:20 with respect to a plane normal to bolt axis. Bolted parts shall fit solidly together when assembled and shall not be separated by gaskets or other compressible material**.**

Clean and prepare faying surfaces as follows:

1. When steel is specified to be painted, apply SSPC-SP10 Near-White Blast Cleaning and apply an inorganic zinc primer all in accordance with Section 811. Provide a Class B slip coefficient of 0.50 minimum.

2. When steel is specified to be unpainted, apply SSPC-SP6 Commercial Blast Clean in accordance with Section 811. Provide a Class B slip coefficient of 0.50 minimum.

3. When galvanized steel is specified, after galvanizing and prior to assembly, abrade contact surfaces within joints by wire brushing or light blasting. Provide a Class C slip coefficient of 0.33 minimum. Do not produce a break or discontinuity in the zinc surface. Wire brushing shall be a light application of manual brushing that marks or scores the surface but removes relatively little of the zinc coating. Blasting shall be a light brush-off treatment which will produce a dull gray appearance. ASTM A490 bolts shall not be galvanized. When ASTM A490 bolts are specified to connect galvanized parts, bolts shall be painted to prevent electrolytic action.

4. When metallic thermal spray coatings are specified, conform to 811.06.6.2.

807.05.2.5 Installation and Inspection: Use Direct Tension Indicator Method, in accordance with 807.05.2.5.1, unless otherwise authorized in writing by the Bridge Engineer.

Install fastener assemblies of the size and quality specified in properly aligned holes. Install a hardened washer directly under nut or bolt head, whichever is the element turned in tightening. Use two hardened washers with ASTM A490 bolts.

A flat washer may be used when the abutment surface adjacent to the bolt head or nut does not have a slope of more than 1:20 with respect to a plane normal to bolt axis. If an outer face of the bolted part has a slope of more than 1:20 with respect to a plane normal to the bolt axis, use a smooth beveled washer to compensate for lack of parallelism.

Do not reuse or re-torque ASTM A325 or ASTM A490 bolts. Retightening previously tightened bolts which have been loosened by tightening adjacent bolts will not be considered as reuse or re-torque.

Protect fasteners from dirt and moisture at the jobsite. Reject fasteners contaminated with dirt and moisture. Only take as many fasteners as are anticipated to be installed and tightened during a work shift from protected storage. Return unused fasteners to protected storage at the end of the shift. Do not clean fasteners of lubricant that is present in as-delivered condition.

Provide a tension measuring device at all jobsites when high strength bolts are being installed and tensioned. Use the device to perform testing, validate installation procedures, train installers, and calibrate wrenches.

Impact wrenches, if used, shall be of adequate capacity and sufficiently supplied with air to perform the required tensioning of each bolt in approximately 10 seconds.

Minimum Required Tension (MRT) for fasteners is provided in Table 807-7 and is based on 70 percent of the specified minimum strength of bolts. All tests shall demonstrate that the tension measuring device indicates a tension not less than 105 percent of MRT.

Before installation of fasteners in the work, the engineer will inspect the marking, surface condition, and storage of bolts, nuts, washers, DTIs, and the faying surfaces of joints for compliance with the specifications.

The engineer will inspect testing procedures and/or calibration to confirm that the selected procedure is properly used, the fastener assemblies match those to be used on the project, and the specified tensions are provided. The engineer will inspect the installation of fasteners in the work to assure that the specified tensions are provided and that the selected procedure is routinely properly applied.

Table 807-7
Installation and Inspection Tension Values

ASTM A325 Bolts				
Bolt Diameter, (inch)	MRT (kip)	10% x MRT (kip)	105% x MRT (kip)	110% x MRT (kip)
$^1/_2$	12	1	13	13
$^5/_8$	19	2	20	21
$^3/_4$	28	3	29	31
$^7/_8$	39	4	41	43
1	51	5	54	56
$1^1/_8$	56	6	59	62
$1^1/_4$	71	7	75	78
$1^3/_8$	85	9	89	94
$1^1/_2$	103	10	108	113
ASTM A490 Bolts				
Bolt Diameter, (inch)	MRT (kip)	10% x MRT (kip)	105% x MRT (kip)	110% x MRT (kip)
$^1/_2$	15	2	16	17
$^5/_8$	24	2	25	26
$^3/_4$	35	4	37	39
$^7/_8$	49	5	51	54
1	64	6	67	70
$1^1/_8$	80	8	84	88
$1^1/_4$	102	10	107	112
$1^3/_8$	121	12	127	133
$1^1/_2$	148	15	155	163

807.05.2.5.1 Direct Tension Indicator (DTI) Method: Do not allow the turning element to be in contact with the DTI. Give special attention to proper installation of flat hardened washers when DTIs are used with bolts installed in oversize or slotted holes.

Use a 0.005 inch tapered feeler gauge for measuring DTI compression in the spaces between the DTI protrusions. A feeler gauge refusal is defined as the inability to touch the bolt shank with the feeler gauge.

1. DTI Method Pre-installation Verification:

Use a Skidmore-Wilhelm Calibrator or equivalent tension measuring device. Use a special flat insert in place of a bolt head holding insert to provide a DTI bearing surface. Perform at least three field verification tests as

specified herein. A fastener assembly verification lot consists of each combination of bolt production lot, nut lot, washer lot, DTI lot, and DTI position relative to the turned element (bolt head or nut) to be used on the project. Test each fastener assembly verification lot with DTIs and flat hardened washers arranged as those in the actual connections to be tensioned. Restrain the element intended to be stationary (bolt head or nut) from rotation. Assign a verification lot number to each fastener assembly verification lot tested.

Use rigid spacers if required so that at least three and preferably no more than five threads are located between the bearing face of the nut and the bolt head. If the bolt is too short to be tested in the tension measuring device, use a similar bolt of adequate length in place of the short bolt.

Tension the fastener to a verification tension of 105 percent of MRT in accordance with Table 807-7. If an impact wrench is used, the tension developed using the impact wrench shall be no more than two-thirds of the verification tension. Use a manual wrench to complete tensioning. Record the number of refusals of a 0.005 inch feeler gauge in the spaces between the DTI protrusions. Reject the DTI lot if the number of refusals for any DTI tested exceeds the Maximum Number of Refusals shown in Table 807-8.

Further tension the fastener until a 0.005 inch feeler gauge is refused in all DTI spaces and a visible gap exists in at least one space between the protrusions. Record tension at this condition and remove fastener assembly from the tension measuring device.

For production bolts too short to be tested in the tension measuring device, additionally assemble the short fastener assembly with an unused DTI from the same lot in a connection of steel plates of equivalent thickness to the work and tension short fastener until a 0.005 inch feeler gauge is refused in all DTI spaces and a visible gap exists in at least one space between the protrusions. Remove short fastener assembly.

The fastener assembly verification lot is accepted if none of the following occur.

1. Inability to compress DTI protrusions to have a 0.005 inch feeler gauge refused in all DTI spaces and a visible gap existing in at least one space between the protrusions.
2. Inability to remove the nut when removing the production fastener assembly from the tension measuring device or from the steel plate connection.
3. Shear failure of threads in production bolt or nut as determined by visual examination following removal.

4. Torsional or torsional/tension failure of the production bolt. Elongation of the bolt in the threads between the bearing face of the nut and the bolt head is acceptable.

For an unaccepted fastener assembly verification lot, perform field Rotational Capacity Test in accordance with 807.05.2.1 to determine acceptance of the bolt, nut and hardened washer lot.

Accept the DTI lot if the recorded tension during the DTI pre-installation verification method at one visible gap is less than 95 percent of the average tension recorded at Test Rotation in the field Rotational Capacity Test.

Table 807-8
DTI Verification Test

A325 Bolts		
Bolt Diameter (inch)	DTI Spaces	Verification Test Maximum Number of Refusals
$^1/_2$	4	1
$^5/_8$	4	1
$^3/_4$	5	2
$^7/_8$	5	2
1	6	2
$1^1/_8$	6	2
$1^1/_4$	7	3
$1^3/_8$	7	3
$1^1/_2$	8	3
A490 Bolts		
Bolt Diameter (inch)	DTI Spaces	Verification Test Maximum Number of Refusals
$^1/_2$	5	2
$^5/_8$	5	2
$^3/_4$	6	2
$^7/_8$	6	2
1	7	3
$1^1/_8$	7	3
$1^1/_4$	8	3
$1^3/_8$	8	3
$1^1/_2$	9	4

2. DTI Method Installation:

Install fasteners in all holes of the connection and bring to snug condition. Snug condition is defined as the fastener tension that exists when all joint material plies are in firm contact and DTI protrusions are partially compressed with a visible gap greater than 0.005 inch in all spaces. If a DTI exhibits a refusal of the 0.005 inch feeler gauge, remove the fastener, install a new unused DTI, and bring the fastener to snug condition.

Further tension all fasteners, progressing systematically from the most rigid part of the connection to the free edges in a manner that will minimize relaxation of previously tensioned fasteners. Proper tensioning of fasteners may require more than a single cycle of systematic partial tensioning prior to final tensioning. Final tensioning is defined as compression of the DTI protrusions resulting in having the minimum number of refusals in accordance with Table 807-9 and having at least one visible gap. If a DTI does not conform to these specifications, remove the fastener assembly, install a new fastener assembly, and bring the fastener to specified final tensioning.

3. DTI Method Inspection:

Visually inspect all DTIs in the connection to verify protrusions are deformed to approximate final position and that a visible gap remains. If a DTI exhibits no visible gap, remove the fastener assembly, install a new fastener assembly, and bring the fastener to specified final tensioning.

Use the specified 0.005 inch feeler gauge on at least 10 percent of the fasteners in a connection, but not less than two fasteners, and verify that the number of refusals conforms to Table 807-9. If the number of refusals on any inspected DTI does not conform to Table 807-9, all DTIs in the connection will be inspected with the 0.005 inch feeler gauge, and any fasteners not sufficiently tensioned shall be further tensioned and re-inspected for visible gap and number of refusals of the 0.005 inch feeler gauge.

If all inspected DTIs conform to the specifications, the connection will be accepted. Should inspection reveal excessive tension (no visible gap) or inadequate tension (less than minimum required refusals of the 0.005 inch feeler gauge), adjust installation procedures to meet specifications.

Table 807-9
DTI Inspection

A325 Bolts		
Bolt Diameter (inch)	DTI Spaces	Installation Minimum Number of Refusals
$^1/_2$	4	2
$^5/_8$	4	2
$^3/_4$	5	3
$^7/_8$	5	3
1	6	3
$1^1/_8$	6	3
$1^1/_4$	7	4
$1^3/_8$	7	4
$1^1/_2$	8	4
A490 Bolts		
Bolt Diameter (inch)	DTI Spaces	Installation Minimum Number of Refusals
$^1/_2$	5	3
$^5/_8$	5	3
$^3/_4$	6	3
$^7/_8$	6	3
1	7	4
$1^1/_8$	7	4
$1^1/_4$	8	4
$1^3/_8$	8	4
$1^1/_2$	9	5

807.05.2.5.2 Turn-of-Nut Method

1. Turn-of-Nut Method Pre-installation Verification:

Test a representative sample of not less than three fastener assemblies for each bolt diameter, length, type, and grade used in the work using a tension measuring device. The test assembly shall include flat hardened washers arranged as those in the actual connections to be tensioned. Demonstrate in all tests that the method for estimating the snug condition and controlling the turns from snug condition given in Table 807-10 develops a tension not less than 105 percent of MRT in Table 807-7. Follow the tension measuring device procedures for fastener assembly installation during testing.

2. Turn-of-Nut Method Installation:

Install fasteners in all holes of the connection and bring to snug condition. Snug condition is defined as the fastener tension that exists when all joint material plies are in firm contact. This may be attained by a few impacts of an impact wrench or the full effort of a worker using an ordinary spud wrench.

Temporarily match mark bolt, nut, and bolted part. Tension all fasteners progressing systematically from the most rigid part of the connection to the free edges in a manner that will minimize relaxation of previously tensioned fasteners in accordance with the rotations specified in Table 807-10.

The rotations specified in Table 807-10 are relative to the bolt, regardless of the element (nut or bolt) being turned. The rotations specified are applicable only to connections in which all material within the grip of the bolt is steel.

For fasteners installed by 1/2 turn and less, tolerance for the specified rotation is minus 0 degrees, plus 30 degrees. For fasteners installed by 2/3 turn and more, tolerance for the specified rotation is minus 0 degrees, plus 45 degrees.

When bolt length exceeds 12 bolt diameters, determine required rotation by testing in a suitable tension device simulating actual conditions.

Table 807-10
Nut Rotation from Snug Condition

	Disposition of Outer Faces of Bolted Parts		
Bolt Length (Measured from underside of head to extreme end of point)	Both faces normal to bolt axis	One face normal to bolt axis and other face sloped not more than 1:20 (bevel washer not used)	Both faces sloped not more than 1:20 from normal to bolt axis (bevel washers not used)
≤ 4 diameters	$^1/_3$-turn	$^1/_2$-turn	$^2/_3$-turn
> 4 diameters and ≤ 8 diameters	$^1/_2$-turn	$^2/_3$-turn	$^5/_6$-turn
> 8 diameters and ≤ 12 diameters	$^2/_3$-turn	$^5/_6$-turn	1 turn

3. Turn-of-Nut Method Inspection:

Calibrate a manual job inspection torque wrench in a tension measuring device. Install five fastener assemblies of each bolt diameter, length, type, and

grade to be used in the work in the tension measuring device and tension to 10 percent of MRT shown in Table 807-7. Further tension the fastener assemblies to MRT with the job inspection torque wrench and record the respective torque value. For the five torque values corresponding to MRT, discard the low and high values and average the remaining three values to determine the Job Inspection Torque.

Inspect fasteners by applying the job inspection torque wrench to at least 10 percent of the fasteners, but not less than two fasteners, selected by the engineer at random in each connection. If no bolt or nut is turned by application of the Job Inspection Torque, the connection will be accepted as properly tensioned. If a bolt or nut is turned by the application of less than the Job Inspection Torque, either apply the Job Inspection Torque to all fasteners in the connection, or re-tension all fasteners in the connection using the original installation method and in accordance with the specified tension. Repeat the inspection process until the connection is accepted.

807.05.2.5.3 Calibrated Wrench Method

Only use Calibrated Wrench Tightening when required by the plans or directed by the engineer. This specification does not recognize standard torques determined from tables or from formulas, which are assumed to relate torque to tension.

1. Calibrated Wrench Method Pre-Installation Verification:

Set wrenches to provide a tension not less than 105 percent of and not greater than 110 percent of MRT in Table 807-7. Calibrate the installation procedures at least once each working day for each bolt diameter, length, and grade using the following:

a. The length of air hose that will be used during installation and the fastener assemblies that are being installed in the work.

b. Accomplish calibration in a tension measuring device capable of indicating bolt tension. Tension three fasteners of the diameter, length, type, grade and washer orientation as those being installed in the work.

c. Recalibrate wrenches when significant differences are noted in the surface condition of the bolts, nuts, bolt/nut threads, or washers.

2. Calibrated Wrench Method Installation:

Install fasteners in all holes of the connection and bring to snug condition. Snug condition is defined as the fastener tension that exists when all joint material plies are in firm contact. This may be attained by a few impacts of an impact wrench or the full effort of a worker using an ordinary spud wrench.

Further tension the connection using the calibrated wrench. Tension all fasteners, progressing systematically from the most rigid part of the

connection to the free edges in a manner that will minimize relaxation of previously tightened fasteners. Return the wrench to touch up previously tensioned fasteners which may have been relaxed as a result of the subsequent tensioning of adjacent fasteners until all fasteners are tensioned to the specified value.

3. Calibrated Wrench Method Inspection:

Perform Calibrated Wrench Method Inspection in accordance with Turn-of-Nut Method Inspection of 807.05.2.5.2.

807.05.3 Falsework: Design falsework in accordance with Section 817.

807.05.4 Straightening Bent Material: Submit for review and acceptance; repair procedures for corrective action. Straighten plates, angles, other shapes and built-up members using methods that will not produce fracture or other damage. Straighten distorted members by mechanical means or by supervised application of a limited amount of localized heat. In no case shall the temperature of the steel exceed 1100°F (590°C).

Following the corrective action, carefully inspect the surface of the metal for evidence of fracture or other damage.

807.05.5 Installing Pin Connections: Use pilot and driving nuts to install pins when required at no additional cost to the Department. Drive pins so that members will be in full bearing with the pins. Tighten pin nuts and burr threads at face of nut to restrain nut.

807.05.6 Field Welding: Field welding is not allowed on structures unless specifically shown on the plans. When shown, comply with Section 809.

807.05.7 Misfits: Correction of minor misfits may be expected. Minor reaming will be considered a legitimate part of erection. Use a reaming tool no larger than the bolt hole diameter. Ream no more than 5 percent of the holes in the connection.

Immediately report any error in fabrication or deformation which prevents proper assembly and fitting of parts. Submit corrective measures to the engineer for review and acceptance. Make all corrections in the presence of the Department's inspector. All corrections and replacements shall be at no additional cost to the Department.

807.05.8 Field Painting: Comply with Section 811.

807.06 PROVISIONS FOR STRUCTURE TYPES.

807.06.1 Orthotropic-Deck Bridges:

807.06.1.1 Protection of Deck Plate after Blasting: If blasting

is used to prepare the deck plate to receive a wearing surface, apply a protective coating to the plate immediately after cleaning.

807.06.1.2 Dimensional Tolerance Limits: Apply dimensional tolerance limits for orthotropic-deck bridge members to each completed but unloaded member in accordance with the latest *AASHTO LRFD Bridge Construction Specifications*.

807.06.2 Weathering Steel: When weathering steel is specified the following additional requirements apply.

807.06.2.1 High-Strength Fastener Assemblies: Use Type 3 fastener assemblies.

807.06.2.2 Flange Drip Plate near Bents: Provide lower flange drip plates on the exterior girders at plan locations to prevent staining of concrete from runoff.

807.06.2.3 Paint Portions of Structural Metalwork near Bents: Clean, paint, and caulk in accordance with Section 811. Color paint topcoat in accordance with 811.03. Use flat paint topcoat finish.

Clean, paint and caulk structural metalwork near bents for a distance of 1.5 times the steel member depth but no less than 10 feet measured from each bent centerline.

807.06.2.4 Clean Non-painted Exposed Surfaces: Clean all exposed surfaces of all grease, oil, paint, or other soilage. Blast clean outside surfaces of exterior girders and the bottom surface of the bottom flange of all girders, either before or after erection, to SSPC-SP 6 in accordance with Section 811. Keep cleaned surfaces free of grease, oil, markings, paint, or other soilage.

807.06.2.5 Caulk Non-painted Steel Details: Caulk non-painted steel details in accordance with 811.06.5.6. Color caulk to match weathering steel in accordance with 811.03.

807.06.2.6 Restore Concrete Finish: Restore all stained concrete surfaces to the required finish at the time of final acceptance.

807.06.3 Anchor Bolts: Anchor bolts are devices used to transfer load to a concrete element. Loads may be tension, shear, or a combination. Layout anchor bolt locations in accordance with the plans. Submit placement procedures to the engineer for review. The submittal shall include procedures for installation and grouting.

807.06.3.1 Placement: Anchor bolts placed in fresh concrete shall be held in position and alignment. Consolidate concrete thoroughly around anchor bolts.

Use blockouts to place anchor bolts in hardened concrete. Use a non-shrink grout from the AML consistent with the specific design requirements. Size the blockouts in accordance with grout manufacturer's recommendations.

Mechanical or epoxy anchor bolt systems may only be used when specified on the plans. Install anchor bolt systems in accordance with manufacturer's recommendations.

Coring to place anchor bolts in hardened concrete is not allowed.

807.06.3.2 Erection and Assembly: Verify the location and alignment of the anchor bolt pattern. Replace bent or misaligned anchor bolts designed for tension, such as curved girders, tower bents, overhead sign support systems, high mast light poles, etc. Set bolts properly at initial casting and construct system without damaging the bolts.

Overhead sign supports and high mast light pole bolt patterns require preloading by a specified tightening procedure in accordance with 807.06.3.5.1.

807.06.3.3 Quality Control: Provide anchor bolts in compliance with the plans (size and grade, bolt material and coating, projection length, bolt pattern and orientation, etc.). Corresponding holes between the base plate and top template plate shall be aligned within 1/8 inch. Individual bolts shall not be out of plumb more than 1/8 inch per 3 feet. Straightening misaligned bolts by bending is prohibited. The Engineer of Record must approve any corrective measure for misaligned bolts. Do not use bolts or nuts with damaged threads that require more than minimal effort by one worker using only a spud wrench to turn the nut. Make the engineer aware of damaged threads and correct to the satisfaction of the engineer.

807.06.3.4 Lubrication: Clean threads of all foreign matter and

lubricate with beeswax immediately prior to placement and tightening of nuts. If delayed more than 24 hours after being lubricated, repeat cleaning and lubricating procedure.

807.06.3.5 Tightening Procedures: Tighten anchor bolts using procedures specified on the plans or as directed by the Engineer of Record.

807.06.3.5.1 Overhead Sign and Light Supports: Install the bottom nut and washers on each anchor bolt. Level the top template by adjusting the bottom nuts so that the template rests on each washer and the distance between the top of the support surface and the bottom face of the nut is approximately 1/2 inch. Remove the template, lubricate the bearing surfaces of the bottom nuts and washers with beeswax, and erect and plumb the structure. Adjust the bottom nuts so that each is bearing on the washer against the base plate. With all cantilever elements removed and with the plumbed structure supported, lubricate the bearing surfaces of the top nuts and washers, install the washers and top nuts, and turn them onto the bolts so that each top nut is hand-tight against the washer.

Using a wrench, turn the bottom nuts up in the sequence specified below to a snug condition. Snug condition is defined as the full effort of a worker on a 12-inch wrench. Using the same sequence, turn the top nuts down to the same snug condition.

Induce a preload into the bolt using a turn-of-nut method. Tighten each top nut in the specified sequence 30 degrees past snug condition. Repeat this process of tightening each top nut an additional 30 degrees down until each top nut has been tightened 60 degrees past snug tight.

Bolt tightening sequence shall be as follows. For an eight-bolt pattern, number the bolts 1 through 8 in clockwise order viewed from above, beginning with bolt 1 on the side away from the heaviest cantilever element. The tightening sequence shall be 1, 5, 2, 6, 8, 4, 7, and 3. For a six-bolt pattern, number the bolts 1 through 6 in clockwise order viewed from above, beginning with bolt 1 on the side away from the heaviest cantilever element. The tightening sequence shall be 1, 4, 2, 5, 6, and 3. Use a similar technique for other bolt patterns.

807.07 MEASUREMENT. Structural metalwork will be measured per lump sum. No weight measurement of structural metals will be made. Estimated weights of structural metalwork shown on the plans are approximate and for information only. It is the contractor's responsibility to determine the correct weight of each grade of metal furnished. No adjustment

in contract price will be made due to discrepancies in the estimated weights shown on the plans. Shop bills will not be required.

807.08 PAYMENT. Payment for the completed and accepted items will be made at the contract lump sum price, which includes furnishing, fabricating, cleaning, applying coatings, erecting, temporary works, materials, labor, equipment, and all work necessary to complete the item.

Partial payments for stockpile of raw materials and fabrication costs will be allowed in accordance with Section 109.

When the engineer orders changes in the work which vary the weight of metal to be furnished, unit prices will be established by dividing the contract lump sum amount by the estimated weight shown on the plans. Compensation will be in accordance with 109.04.

Changes ordered by the engineer in the grade of steel to be furnished, which result in additional cost to the contractor, will be compensated for in accordance with 109.04.

Changes in the grade or quantity of steel which result from contractor adjustments in plate dimensions for efficiency in fabrication shall be at no additional cost to the Department.

Payment will be made under:

Item No.	Pay Item	Pay Unit
807-01	Structural Metalwork (Grade)	Lump Sum
807-02	Structural Metalwork (Anchor Bolts)	Lump Sum
807-03	Structural Metalwork (Access System)	Lump Sum
807-04	Structural Metalwork	Lump Sum

Section 808
Steel Grid Flooring

808.01 DESCRIPTION. Furnish and install steel grid flooring. Steel grid flooring may contain sections filled with concrete.

808.02 MATERIALS. Materials shall comply with the following:

Paint and Protective Coatings	811
Portland Cement Concrete	901
Metals	1013

Use Class A1 concrete with Grade F aggregate for concrete filled steel grid floors. Unless otherwise specified, steel grid flooring shall be hot-dipped galvanized.

808.03 FABRICATION. Before fabrication or construction is undertaken, submit shop drawings and erection drawings in accordance with 801.05.

Fabricate in accordance with the plans and specifications. Deviations will not be permitted without approval of the Bridge Engineer.

Provide the DOTD Fabrication Engineer at least 30-days advance written notice of the beginning of work at the mill or shop so that inspection may be provided. No material shall be manufactured or work done in the shop before shop drawings have been accepted and before the DOTD Fabrication Engineer has been notified.

808.04 FACILITIES FOR INSPECTION. Furnish facilities for inspection of material and workmanship in the mill and shop as described in 807.04.2.

808.05 STORAGE OF MATERIALS. Store steel grid flooring as specified in 807.04.1.

808.06 STRAIGHTENING MATERIAL. If straightening is necessary, straighten using methods that will not damage the metal.

808.07 ARRANGEMENT OF SECTIONS. Where main support elements are normal to the centerline of roadway, extend the grid floor units over at least three supports for the full width of roadway for roadways up to 40 feet. Where transverse joints are required, place joints over supports. Where longitudinal joints are required, shear transfer devices shall be provided in accordance with the plans.

Where main support elements are parallel to the centerline of roadway, extend the grid floor units over at least three supports for the full width of the roadway for roadways up to 40 feet. Where longitudinal joints are required, place joints over supports. Where transverse joints are required, provide shear transfer devices in accordance with the plans.

Attach trim plate at all free edges of the grid floor panels in accordance with the plans.

808.08 PROVISION FOR CAMBER. Shop camber grid flooring as required for final required camber for the installation. Provide full contact between the grid floor bearing bars and the supporting surface.

808.09 FIELD ASSEMBLY. In order to provide the best riding surface and transition between panels, assemble the largest possible areas of grid flooring before welding or connecting to its supports. Make main elements continuous and connect sections along their edges by welding. Connections will be subject to approval.

808.10 CONNECTION TO SUPPORTS. Connect the floor to its steel supports by welding. Before welding, either load the floor to make a tight joint with full bearing or clamp down. Location, length, and size of welds will be subject to acceptance of the Bridge Engineer, but in no case shall they be less than the manufacturer's standards.

Securely fasten ends of main steel members of the slab together at the sides of the roadway for the full length of span by steel plates or weld angles to ends of main members.

Do not weld grid flooring to the steel bridge rail at the gutter line.

808.11 WELDING. Comply with Section 809 for shop and field welding. Comply with the approved method and location of field welding as shown on the shop drawings**.**

Remove galvanized coatings prior to welding grid floors to support members.

808.12 PROTECTIVE COATING. Unless otherwise specified, hot dips galvanize the steel grid floor in accordance with Section 811.

Repair galvanized coatings after welding.

808.13 CONCRETE FILLER. When specified, place concrete filler in the open grid. Use galvanized metal forms.

Floor types with bottom flanges not in contact shall be provided with bottom forms of metal to retain the concrete filler.

Fit metal forms tightly on bottom flanges of floor members and place in short lengths extending only about 1 inch onto the edge of each support. In all cases forms shall provide for adequate bearing of the slab on the support.

Consolidate the concrete by vibrating the steel grid floor. The vibrating device and manner of operating it will be subject to approval.

808.14 MEASUREMENT. The quantity of steel grid flooring for payment will be the design area as specified on the plans.

Concrete for filling steel grid flooring will not be measured for payment.

808.15 PAYMENT. Payment for steel grid flooring will be made at the contract unit price per square foot, which includes furnishing, fabricating and installing all materials, including, but not limited to, base plates, trim angles, trim plates, galvanizing or other coating (if required), and all welding, bolting, and connections.

Payment will be made under:

Item No	Pay Item	Pay Unit
808-01	Steel Grid Flooring (Type)	Square Foot

Section 809
Welding

809.01 DESCRIPTION. Provide structural welding, qualifications, and testing.

809.02 QUALIFICATION OF PROCEDURES, WELDERS, AND WELDING OPERATORS.

809.02.1 General: The Department's Construction Section will be the qualifying agency.

Qualifying tests may be made at locations selected by the contractor and approved by the Department. Give advance notice of no less than one week to the Department's Fabrication Engineer so that the Department can arrange for the presence of the inspector.

Provide two copies of the required reports to the Department's Fabrication Engineer.

Identify each welder and welding operator's work with a temporary marking.

Provide documentation of welder and welding operator qualifications to the Department's Fabrication Engineer for review and acceptance.

All costs incidental to welding qualifications shall be the responsibility of the contractor.

809.02.2 Structural Steel, Steel Pipe, and Tubular Members:

809.02.2.1 Structural Steel: Provide qualified welding procedures, welders, and welding operators, in accordance with the latest edition of *ANSI/AASHTO/AWS D1.5 Bridge Welding Code*.

809.02.2.2 Steel Pipe and Tubular Members: Provide qualified welding procedures, welders, and welding operators, in accordance with the latest edition of *ANSI/AWS D1.1 Structural Welding Code-Steel*. For structural members that could fall on traffic, provide non-destructive testing according to *ANSI/AASHTO/AWS D1.5 Bridge Welding Code*.

809.02.3 Reinforcing Steel: Provide qualified welding procedures and welders, in accordance with the latest edition of *ANSI/AWS D 1.4 Structural Welding Code-Reinforcing Steel*.

809.02.4 Aluminum: Provide qualified welding procedures, welders, and welding operators, in accordance with the latest edition of *ANSI/AWS D 1.2 Structural Welding Code-Aluminum*.

809.02.5 Electrodes: Qualify and certify electrodes in accordance with the latest edition of the appropriate *ANSI/AASHTO/AWS Welding Codes*.

809.03 WELDING. Provide size, type, and length of welds as shown on the plans and shop drawings. Identify each welder and welding operator's work with a temporary marking.

809.03.1 Structural Steel, Steel Pipe, and Tubular Members:

809.03.1.1 Structural Steel: Comply with the latest edition of *ANSI/AASHTO/AWS D1.5 Bridge Welding Code*.

809.03.1.2 Steel Pipe and Tubular Members: Comply with the latest edition of *ANSI/AWS D1.1 Structural Welding Code-Steel*.

809.03.2 Reinforcing Steel: Welding of reinforcing steel is only allowed when specified on the plans or with written permission from the Department's Fabrication Engineer.

Comply with the latest edition of *ANSI/AWS D1.4 Structural Welding Code-Reinforcing Steel*.

809.03.3 Aluminum: Comply with the latest edition of *ANSI/AWS D1.2 Structural Welding Code-Aluminum*.

809.04 NONDESTRUCTIVE TESTING.

809.04.1 Structural Steel, Steel Pipe, and Tubular Members: Comply with the latest edition *ANSI/AASHTO/AWS D1.5 Bridge Welding Code* except that the ends of all groove welds on main members shall be tested with the dye penetrant inspection method.

809.04.2 Reinforcing Steel: Comply with the latest edition of *ANSI/AWS D1.4 Structural Welding Code-Reinforcing Steel*.

809.04.3 Aluminum: Comply with the latest edition of *ANSI/AWS D1.2 Structural Welding Code-Aluminum*. For sign support structures, dye penetrant test all butt weld splices in all members and all fillet welds connecting flanges to members. Use dye penetrant inspection on 10 percent of all remaining welded connections unless a failing test occurs, at which time 100 percent of the welds will be inspected for that sign support structure.

809.05 MEASUREMENT AND PAYMENT. All welding, labor, materials, weld metals deposited, testing, and inspection will not be measured for payment. Unless otherwise specified, payment will be included in payment for the associated welded items.

Section 810
Bridge Railings, Hand Railings, Permanent Roadway Barriers, and Pier Protection Systems

810.01 DESCRIPTION. Furnish and construct bridge railings, hand railings, permanent roadway barriers, and pier protection systems in accordance with the contract.

810.02 MATERIALS. Comply with the following sections and subsections:

Portland Cement Concrete	901
Joint Materials	1005
Reinforcing Steel	1009
Concrete Curing Materials, Admixtures, Special Finishes	1011
Structural Metals	1013
Steel Tubing and Pipe	1013
Carbon Steel Bolts, Nuts, and Washers	1013
High-Strength Bolts, Nuts, Washers, and DTIs	1013
Anchor Bolts	1013

Use Class A1 concrete unless otherwise specified on the plans.

Galvanize all structural steel in accordance with subsection 811.08. Structural steel shall be AASHTO M270, Grade 50.

Galvanize bolts, nuts, washers, and DTIs in accordance with Section 811.

810.03 CONSTRUCTION REQUIREMENTS. Place slip-formed concrete with a slip-form placing machine designed to spread, vibrate, consolidate, and finish concrete in one pass of the machine so that a minimum of hand finishing will be necessary to provide a dense, homogeneous unit true to lines and grade.

Conform to Sections 805, 806, 807, and 811, except as provided in this section. Perform excavation and backfilling and dispose of excess excavated material in accordance with 202.02.

Allow bridge deck concrete to attain a minimum compressive strength of 4000 psi before placing reinforcement, forms, concrete, or metal for bridge railings. On continuous spans, do not place railing until the deck of the continuous unit is completed.

Allow foundation concrete for roadway barriers and pier protection systems a minimum of three days curing time and to attain a minimum compressive strength of 1600 psi before placing reinforcing steel and forms for concrete barriers. Foundation concrete shall attain minimum specified compressive strength prior to placing concrete.

Wet cure concrete portions of bridge railings, hand railings, roadway barriers, and pier protection systems in accordance with 805.06.1 for 14 days.

Apply Class 2 and 3 finishes to all visible concrete surfaces or as defined on the plans.

810.04 LINE AND GRADE. Lines and grades of railings and barriers shall be true to that shown on the plans. Place railings, barriers, and curbs perpendicular to roadway cross-slope and grade.

810.05 JOINTS. Construct joints as shown on the plans and as follows.

All joints shall be formed without saw cutting. Joint edges shall be uniformly clean with no ragged edges. Support preformed joint material to prevent movement during placement or slip-forming operations.

810.05.1 Concrete Roadway Barriers, Pier Protection Systems, and Foundations. Isolate concrete barriers and foundations from the travel pavement and provide a formed, vertical 1/2-inch to 1.0-inch open joint, full depth through the barrier and foundation, placed at 40-foot to 60-foot intervals. Seal the formed vertical joint with preformed joint filler or a poured and extruded joint sealant in accordance with 1005.01 and 1005.02, respectively. Between formed open full-depth joints, vertically tool a 3/4-inch deep joint around the full perimeter of the exposed faces of the barrier immediately after placement of barrier concrete. Space tooled vertical joints according to plan locations, but no more than 20 feet apart.

810.05.2 Concrete Bridge Railings. Provide a formed open joint for concrete bridge railings of the size shown on the plans at the centerline of each bent and provide a water stop in accordance with 1005.07 or extension of the joint seal to seal the joint. Between formed open joints, tool a 3/4 inc-h deep joint around the full perimeter of the exposed faces of the barrier. Space tooled vertical joints according to the plan locations, but no more than 20 feet apart.

810.06 METAL RAILING. Drill holes for field connections with railing in place on the structure at proper grade and alignment. Adjust railing, correct alignment and camber throughout the railing length, and provide proper

matching of joints, prior to finalizing connections. Repair coating damage in accordance with Section 811.

810.07 MEASUREMENT. Quantities for bridge railing and hand railing will be the design quantities per linear foot as specified on the plans. Sections measured for payment include bridge railing, hand railing, transitions, and joints.

Quantities for roadway barriers and pier protection systems will be per linear foot as specified on the plans. Sections measured for payment include foundations, barriers, transitions, and joints.

Materials, excavation, backfill, and disposal of excess excavated material will not be measured for payment.

810.08 PAYMENT. Payment will be made at the contract unit price per linear foot, subject to the following provisions. Payment for concrete for bridge railing, roadway barrier, and pier protection systems will be subject to the pay requirements of Section 901 on a lot basis.

Payment includes all labor, materials, hardware, and equipment necessary to complete the work.

Payment will be made under:

Item No.	Pay Item	Pay Unit
810-01	Concrete Bridge Railing (Type)	Linear Foot
810-02	Metal Bridge Railing	Linear Foot
810-03	Concrete and Metal Bridge Railing	Linear Foot
810-04	Hand Railing	Linear Foot
810-05	Concrete Roadway Barrier (Type)	Linear Foot
810-06	Concrete Pier Protection System (Vehicle)	Linear Foot

Section 811
Painting and Protective Coatings

811.01 DESCRIPTION. Furnish cleaning, surface preparation, containment, collection, sampling and testing, storage and disposal of waste, and application of paints and other protective coatings for metals and other materials.

811.02 ACRONYMS AND ABBREVIATIONS.

AISC	American Institute of Steel Construction
ALARA	As Low as Reasonably Achievable
BADCT	Best Available Demonstrated Control Technology
CAS	Coating Application Specialist
CFR	United States Code of Federal Regulations
DFT	Dry Film Thickness
DIR	Daily Inspection Report
EPA	Environmental Protection Agency
HEPA	High Efficiency Particulate Air
LAC	Louisiana Administrative Code
MSDS	Material Safety Data Sheet
NACE	National Association of Corrosion Engineers
NTPEP	National Transportation Product Evaluation Program
NIOSH	National Institute for Occupational Safety and Health
PEL	Permissible Exposure Limits
QA	Quality Assurance
QC	Quality Control
QCS	Quality Control Supervisor
RCRA	Resource Conservation Recovery Act
SSPC	Society for Protective Coatings
TCLP	Toxicity Characteristics Leaching Procedure
TSP	Total Suspended Particulate

811.03 MATERIALS. Unless otherwise specified, use a Zinc Paint System from the Approved Materials List for painting new and existing metals to be painted. Provide organic zinc primer compatible with the inorganic zinc primer as a repair and stripe coat component; and provide an intermediate coat compatible with both the inorganic and organic zinc primers. The paint supplier will certify at the time of paint approval, the materials (primers &

intermediate coats) are compatible and will not affect the performance of the whole system as tested by NTPEP.

Show the paint system to be used on shop or working drawings. Use only one paint system from one manufacturer for the entire structure without modifications. Top coat colors shall be as defined in Table 811-1. When spot painting or zone painting existing metals, match existing top coat color.

Table 811-1
Top Coat Federal Color Number

Description	Federal Standard 595C
Black (Steel)	17038
Silver (Steel)	17178
Dark Bronze (Steel)	30040
Weathering (Steel)	30045
Khaki (Steel)	30372
Gray (Concrete)	36440
Gray (Steel)	36463

Provide coating systems with visibly contrasting color tint for each full coat and stripe coat.

Provide anti-skid surface, compatible with the paint system and recommended by the manufacturer unless otherwise specified, on stair treads, walkway surfaces, platforms, and landings.

Coating materials shall not be used until the Project Engineer has inspected the materials and each batch of paint has been tested by the DOTD Materials and Testing Section and accepted.

Paints	1008
Cold Tar Epoxy-Polyamide Paint	1008.04
Cold Galvanizing Repair Compound	1008.05
Maintenance Overcoating of Steel Bridges	1008.08

Abrasives: Use properly sized abrasives to achieve the required cleanliness and surface profile. Use abrasives meeting the requirements of *SSPC-AB1, Mineral and Slag Abrasives*; *SSPC-AB2, Cleanliness of Recycled Ferrous Metallic Abrasives*; or *SSPC-AB3, Newly Manufactured or Re-Manufactured Steel Abrasive*. Do not introduce any contamination that interferes with the coating application and performance, including chlorides and other salts.

For field applications, abrasives delivered to project site shall be new and conform to *SSPC-AB3*. Once used during the work, abrasives may be

recycled provided the resulting conductivity and cleanliness conform to *SSPC-AB2*. Select a sample from each recycling machine in use and conduct the water-soluble contaminant and oil content tests outlined in *SSPC-AB2* at least one time each week or more frequently, if directed. Conduct the non-abrasive residue and lead content tests as directed by the Project Engineer. If test results do not meet requirements, notify the Project Engineer immediately, remove and replace the abrasive, clean the recycling equipment, and conduct tests each day to confirm the equipment is functioning properly. Return to the weekly testing interval when directed.

Caulk: Unless otherwise specified, use caulks that are paintable, compatible with the coating system, and recommended by the coating manufacturer. Provide caulk conforming to Federal Specification *TT-S-00230 C, Type II, Class A.* For painted metalwork, use caulk colored to contrast the color of the intermediate and top coats. For unpainted and painted sections of weathering steel, use caulk colored to match the color of the weathered steel in accordance with Table 811-1.

Penetrating Sealer: Use low viscosity 100 percent solids un-pigmented epoxy recommended by the coating manufacturer.

Rust Preventative Compound: Use a Class 3 rust preventative compound meeting the requirements of Military Specification MIL-C-11796C, Corrosion Preventative Compound, Petrolatum, Hot-Applied.

Soluble Salts Test Kit: Use a soluble salts test kit in accordance with SSPC-Guide 15 utilizing Multi-Step Ion-Specific Methods. Ensure the test patch/cell or sleeve creates a sealed, encapsulated environment during ion extraction and is suitable for testing all structural steel surfaces. A Fully Automated Conductivity Measuring Technique may be allowed, subject to acceptance by the Project Engineer.

Thinners, Solvents, and Cleaners: Use thinners, solvents, and cleaners listed on the coating manufacturer's product data sheet. For overcoating systems, use thinners, solvents, and cleaners that do not damage the existing coating system or inhibit the performance of the newly applied coatings.

811.04 EQUIPMENT. Store equipment to prevent access to the structure by unauthorized personnel during non-work hours.

Provide containment equipment with air filtration systems with new unused filters, and purged of contaminants prior to delivery to the project site.

Prior to removal of equipment from the project site, remove air filtration filters and purge equipment of contaminants. Notify the Project Engineer prior to removal of equipment from project site.

811.04.1 Compressed Air: Use a compressed air system capable of delivering clean, dry, continuous nozzle pressure to achieve the required surface cleanliness and profile or spray pattern. The system shall comply with the instructions and recommendations of the manufacturer of the abrasive blasting system and coating application system.

811.04.2 Abrasive Blast System: Design the blasting system to produce the specified cleanliness and profile. For shop applications, centrifugal wheel blaster is allowed.

811.04.3 Coating Application System: Use the coating application equipment in accordance with the coating manufacturer's product data requirements.

811.04.4 Scaffolding and Containment Systems: Equip with rubber rollers or other protection to reduce damage to painted surfaces. No erection of containment or scaffolding equipment is allowed until acceptance of the containment systems submittal.

811.05 SUBMITTALS. Conform to Section 801.

Provide submittals as applicable to the specified work to be performed. Unless otherwise specified, provide submittals to the Project Engineer, and at least 30 calendar days before beginning work. Copy the Project Engineer on submittals directed elsewhere. Resubmittals shall be complete submittals and not partial of corrected items. Maintain a copy of all submittals on site throughout the duration of the contract.

811.05.1 Qualifications: Maintain certifications for the duration of the contract. If the certifications expire or become invalid, do not perform work until reissuance of certifications. Notify the Project Engineer of any change in certification status. Provide results of audits or investigations occurring during the contract duration to the Project Engineer within one day of receiving results. Delay in work due to non-conformance with this section will be at no additional cost or time to the Department.

Submit for record the following information as a minimum:

811.05.1.1 Shop: Submit AISC certification for shops performing cleaning and painting operations on existing steel.

811.05.1.2 Cleaning and Painting Contractor: Submit documentation showing the contractor performing field cleaning and painting work is certified by SSPC to the requirements of SSPC-QP1 and SSPC-QP2.

811.05.1.3 Blasters and Painters: For field work provide at least the minimum number of CAS required under SSPC-QP1 requirements.

811.05.1.4 Contractor's License and Certifications: For contractor licensing requirements comply with 102.02.

Upon receipt of apparent low bidder notification, provide to the Department's Project Control Section a current copy of the appropriate certifications from SSPC within 10 working days:

SSPC-QP1, Standard Procedure for Evaluating Qualifications of Painting Contractors (Field Application to Complex Structures).

SSPC-QP2, Standard Procedures for Evaluating the Qualifications of Painting Contractors to Remove Hazardous Paint, prior to Notice to Proceed.

811.05.1.5 Quality Control Inspectors for Field Work: Submit for record the name and qualifications of the personnel performing quality control. The Quality Control Supervisor shall be certified as a NACE CIP (Coating Inspector Program) Level 3 and have a minimum of three years of experience as a Quality Control Supervisor on bridge painting projects while certified. Additional inspectors shall report directly to the Quality Control Inspector and shall be certified as a NACE CIP (Coating Inspector Program) Level 1 or a SSPC BCI (Bridge Coating Inspector) Level 1 and have a minimum of two years of experience as a coating inspector on bridge painting projects while certified.

811.05.1.6 OSHA Competent Persons: Submit for review training documentation and certifications for the designated OSHA Competent Persons.

For field application involving lead paint removal, submit for review the designated primary and back-up Competent Persons responsible for the observation and monitoring of work activities and to oversee the implementation of the Compliance Plan, Environmental Protection Plan, Waste Handling Plan, and Containment performance. At a minimum, the designated Competent Persons shall have the SSPC C3 Supervisor/Competent Person Training for Deleading of Industrial Structures, any required SSPC C5 refresher courses, and have three years field experience in industrial lead paint removal. The designated primary Competent Person shall not be a member of the production crew (Superintendent, Forman, Quality Control Inspector, Blaster, Painter, etc.) and shall not have additional responsibilities that prevent the fulfillment of the responsibilities of the Competent Person. In the event the primary Competent Person is absent from the project site, the designated back-up Competent Person will be the acting Competent Person and perform the duties of the primary Competent Person. No hazardous waste generating, handling, storage, or disposal activities may be performed without the

presence of the designated primary or back-up Competent Persons on the project site to observe these activities.

811.05.2 Permits: Submit for review all required permits and applications.

811.05.3 Project Contacts: Submit for record the names and phone numbers of designated project personnel and emergency contacts.

811.05.4 Abrasive Materials: Submit for record the name of the abrasive manufacturer and specifications of the abrasives to be used. Provide abrasive sizes, along with supporting industry recommendations or previous project performance results, that selection will achieve the required cleanliness and surface profile. For shop application, submit to the Fabrication Inspector.

Provide certification that the abrasives meet the cleanliness criteria under 811.03.

811.05.5 Coating Application Method: Submit for review coatings and application methods.

811.05.6 Paint System Manufacturer Information: For each paint system, submit for review the following as a minimum.

Provide Material Safety Data Sheets (MSDS) and paint manufacturer's Product Data Sheet and Specifications including the following:

- Name of the company that manufactures the paint.
- Surface preparation recommendations or requirements.
- Allowable atmospheric conditions during which the coating shall be applied including ambient temperature, relative humidity, surface temperature, and dew point temperature.
- Specific mixing instructions.
- Thinner recommended and maximum thinning ratios to be used with each coating.
- Allowable application methods and instructions.
- Minimum and maximum dry film thickness per coat.
- Primer, intermediate, and finish coat pot life at the anticipated application temperatures.
- Minimum and maximum curing time between coats referenced to both atmospheric conditions and a confirming physical test for each coat.
- Ventilation requirements.
- Shelf life.
- Maximum recoat window.
- Manufacturer's recommendations for remediation of excessive or deficient DFT.

811.05.7 System Compatibility: For painting new and existing metals, submit for review to the Project Engineer selected products to be used on the project and any additional surface preparation requirements. Also, submit a letter from the coating manufacturer stating that surface treatment, water additives, coatings, penetrating sealer, caulking, and filler materials to be used are compatible and will not affect the performance of the whole system as tested by NTPEP.

For maintenance of existing coatings, submit for review to the Project Engineer a letter from the coating manufacturer stating that surface treatment, water additives, coatings, penetrating sealer, caulking, and filler materials to be used are compatible.

811.05.8 Quality Control Plan: Submit a Quality Control Plan including the following as a minimum:

811.05.8.1 Shop Preparation and Application: Submit for review a quality control plan that is to be followed on the project to the Department's Fabrication Inspector.

811.05.8.2 Field Preparation and Application: Submit for review a current Corporate Quality Control Plan conforming to SSPC-QP1, Standard Procedure for Evaluating Qualifications of Painting Contractors (Field Application to Complex Structures) and/or SSPC-QP2, Standard Procedure for Evaluating the Qualifications of Painting Contractors to Remove Hazardous Paint certifications as appropriate.

Submit for review a site specific Coating Quality Control Plan.

811.05.8.3 Protection of Adjacent Surfaces: Submit for record a quality control plan for the protection of adjacent surfaces from damage by direct or indirect blasting and coating operations, including, but not limited to, machinery, wire ropes, cables, electrical conduits and conductors, grating, platforms, galvanized metals, aluminum or machined surfaces, vehicles, and other surfaces that may be damaged.

Prevent blast media and dust contamination of mechanical systems, open gears, sheaves, wire ropes, seals, etc. Upon completion of blasting operations, clean these surfaces with approved solvents and re-grease to the satisfaction of the Project Engineer.

Submit proposed repair procedures for review and acceptance prior to remediation action if damage occurs.

811.05.8.4 Quality Control Documentation: Submit for record documentation specified in 811.06.5.2. Submit documentation for each production day by the end of the following business day**.**

811.05.9 Pollution Control and Monitoring Plan: For field cleaning or painting, submit as one document for review to the Project Engineer a written site specific compliance plan describing the means for complying with all federal, state, and local regulations including pollution control provisions specified herein. The written plan shall be in accordance with SSPC Project Design: Industrial Lead Paint Removal Handbook, Volume II, Phase 6; Environmental Monitoring.

Include at least the following components:

- Scaled map of the work site layout showing temporary waste storage areas, and staging areas.
- Ambient air and personnel sampling frequency.
- Site specific lead Health and Safety Plan (OSHA 29 CFR § 1926.62).
- Site specific Environmental Protection Plan.
- Waste water storage, sampling, treatment and disposal plan.
- Hazardous material and solid waste handling, storage, sampling, and recycling plan.
- Hazardous waste handling, storage, sampling, and disposal plan.
- Qualifications and certifications of the testing laboratory; hazardous waste transporter; and the storage, treatment and disposal facility.
- Reviewed and accepted Containment System Plan. Comply with Section 817.
- Plan for clean-up of soil and water contamination within the project limits.

811.05.10 Worker Protection Documentation: For field applications, submit for record, as one document, a Worker Protection Plan demonstrating the incorporation of appropriate safety procedures for all hazards on the job site, whether specifically identified herein or not. Demonstrate compliance with the following as a minimum:

NIOSH "National Institute for Occupational Safety and Health."

OSHA 29 CFR § 1910 *Occupational Safety and Health Standards.*

OSHA 29 CFR § 1926 *Safety and Health Regulations for Construction*.

40 CFR 117, *Determination of Reportable Quantities for Hazardous Substances NIOSH Method 7082; Lead*.

Working Over or Near Water [29 CFR § 106].

Submit records in accordance with 811.09.6.

811.05.11 Worker Training Information: For cleaning and painting existing steel, submit for record worker training information for OSHA Interim Final Rule on Lead Exposure in Construction training. Include trainer name, trainer qualifications, location and time of training, and outline of training program.

811.05.12 Cleaning and Painting Activity Schedule: For field application, submit for record a detailed plan of cleaning and painting work activities, including order of work, and a chart or scale demonstrating completion milestone dates. Update monthly and as directed**.**

811.05.13 Schedule of Work Segments and Activities for Payment: For field application of protective coatings, submit to the Project Engineer for review a proposed schedule of work dividing the structure into segments and activities identified for payment purposes. Include in the schedule at least the following information.

1. A diagram of the structure divided into segments of work areas. (e.g., Panel point to panel point, pier to pier, station to station, etc.) The lump sum bid item will be divided proportionally by the number of identified and accepted segments of work. When the execution of work requires the work to be performed in phases, further divide the segments into sub-segments for payment purposes.

2. A list of work activities within segments and sub-segments, including, but not limited to, erecting rigging and containment; cleaning, surface preparation, application of primer and stripe coat; application of intermediate coat; application of top coat; repairs and clean-up; and derigging and touch up. The accepted list of work activities will be divided proportionally for payment for work performed in each accepted segment or sub segment of work.

When cleaning and painting existing steel utilizing the three coat zinc paint system, unless otherwise specified, payment allocations within segments and sub-segments, broken down by completed activities, will be made as follows:

Erecting Rigging and Containment	20%
Cleaning, Surface Preparation, Application of Primer and Stripe Coat	40%
Application of Intermediate Coat	15%
Application of Top Coat	15%
Repairs, Clean up, De-rigging and Touch up	10%

When specified, provide a CPM (Critical Path Method) schedule.

811.05.14 Color Samples: For each paint system, submit for review three sets of samples for each coat and stripe coat color. Provide samples on

material similar to application and on minimum coupon size 3 inch x 6 inch. Do not deliver paint system materials to the job site until color sample submittal acceptance.

811.05.15 Paint System Samples: For each paint system and top coat color, after acceptance of color samples and before ordering of paint system materials, submit for review paint system application and liquid samples. When anti-skid is specified for the top coat, provide additional paint system samples containing the anti-skid additive applied to the top coat and the corresponding color to be used.

Provide paint system application samples on 0.25 inch thick by 8.5 inch wide by 11 inch long sheet of material similar to application and prepared as follows:

- Divide the sheet into four equal horizontal strips;
- Prime three strips starting from the bottom;
- Paint intermediate coat on the two bottom strips;
- Paint top coat on the bottom strip;
- Top strip to remain unpainted with blast profile exposed.
- Apply a 1-inch wide stripe coat centered over the line formed by the unpainted and the prime coat for half the plate width.
- Provide samples in accordance with the Materials Sampling Manual.

811.05.16 Maintenance of Traffic: Submit to the Project Engineer for review documentation demonstrating conformance to the plans. Include a description and schedule of activities affecting traffic. During construction, submit proposed changes in the documentation at least 14 calendar days prior to the implementation of the change.

Include as a minimum the following:

811.05.16.1 Roadways: Submit a description and schedule of proposed lane closures and reductions to clearances. Conform to Section 713.

811.05.16.2 Railways: Submit a description and schedule of proposed reductions to clearances and activities within the vicinity of tracks as specified by the railroad.

Submit Right of Entry and insurance documentation as required by the railroad. Conform to 107.08.

811.05.16.3 Waterways: Submit a description and schedule of proposed construction activities that will require equipment to occupy the waterway or affect clearances. Conform to 107.09.

General coordination with the U.S. Coast Guard will take place through the Project Engineer.

811.06 CLEANING AND PAINTING STRUCTURAL METALWORK.

Clean and paint metals in accordance with the plans and specifications. Do not paint surfaces where paint would interfere with welding or proper operation of movable metal parts.

Except for solvent or water jet cleaning, perform surface preparation work only when the temperature of the steel surface is at least 5°F above the dew point temperature. In the event that any rusting or contamination occurs after the completion of the surface preparation, prepare the surfaces again to the specified requirements.

Coat metal surfaces to be encased in concrete and top surfaces of steel girder top flanges to be in contact with concrete in regions of girders specified to be painted with a minimum of one coat of primer.

Where shear connectors are applied and primer has been removed, primer does not need to be reapplied provided at least 2 inches from the edge of flange is coated and repaired as needed.

Painting of aluminum or stainless steel surfaces will not be required, except where aluminum is placed against concrete.

When weathering steel is to be used for structural members, clean and paint portions specified to be painted in accordance with 807.06.2. Leave other areas unpainted. Conform to 811.06.4 for surface preparation.

When specified, paint galvanized or metallized surfaces of sheet metal, electrical conduit, and water, air and gas pipes that are exposed and visible. Do not paint other galvanized or metallized surfaces unless otherwise specified.

Prevent laps, sags, over spray patterns, and other undesirable characteristics.

Measure dry film thickness in accordance with SSPC-PA2.

Upon completion and request for acceptance of a section of the work, clean painted surfaces of any staining and repair any defective areas. The painted surfaces shall have a uniform appearance prior to acceptance.

811.06.1 Shop Painting:

811.06.1.1 Surfaces to be Painted: When fabrication and cleaning are completed, paint surfaces with one coat of primer before corrosion occurs. Where paint would be detrimental to field welding operations, the surface shall not be shop painted within a suitable distance from edges to be welded or spliced. Prepare shop and field contact (faying) surfaces in accordance with 807.05.2.4.

811.06.1.2 Erection Marks: Paint erection marks on surfaces with a compatible paint of contrasting color.

811.06.1.3 Inaccessible Surfaces: Apply the complete paint system prior to assembly or erection to surfaces not to be in contact, but which will be inaccessible after assembly or erection.

811.06.1.4 Machine Finished Surfaces: Apply an approved rust preventive compound to machine finished surfaces that mate or slide, or will not be coated immediately, as soon as practical after being accepted and before removal from the shop. Apply coatings to all other machined surfaces except mill-to-bear surfaces.

Paint surfaces of iron and steel castings which are machine finished for the purpose of removing scales, fins, blisters, or other surface deformations with the specified paint system.

811.06.1.5 Pins and Pin Holes: After fabrication, coat pins and pin holes with an approved protective coating.

Immediately prior to erection, remove the protective coating and apply a high-grade lubricant grease with non-corrosive properties to the bearing surfaces.

After erection, completely remove any corrosion, excess grease, and any other contaminants that would prevent adherence of paint. Coat the exposed surfaces of pins and pin assemblies with the specified paint system.

811.06.1.6 Loading: Do not load material for shipment until paint is dry and cured in accordance with 811.06.5.11.

811.06.2 Field Painting: Any damage to the structure or surrounding area resulting from the contractor's operations shall be repaired as directed by the Project Engineer, at no additional cost or time to the Department.

The contractor shall hold absolute responsibility and liability for damage to persons, property, vehicles, and the environment resulting from the execution of the work required by this contract.

For connections with galvanized fasteners, prepare fastener surfaces in accordance with 811.06.4 for surfaces that are specified to be painted. Clean surfaces and apply primer to the fastener assemblies and connection plates, overlapping at least 2 inches of undamaged primer.

Do not apply the field coat of paint to the steel work below the concrete deck level until the deck and concrete barrier railings have been completed and metalwork cleaned. Keep steel members clean by washing and removing any materials that adhere to the surface and mars the finish of the steel members. If concreting operations damage the paint, clean the surface and spot prime or paint as directed.

Provide, operate, and maintain at the site and to all portions of the project a powered hoist, lift or a temporary stairway to provide safe access to all work

areas for workers, inspection personnel and the engineer. Any temporary structures, equipment or devices used for access from the ground to the bridge structure shall be secured to prevent unauthorized use or trespass on the bridge structure.

811.06.3 Delivery, Storage and Handling: Deliver materials to the job site in original, undamaged, and unopened containers. Clearly indicate the name and address of manufacturer, manufacturer's brand name, trade name or trademark, color batch number, date of manufacture, shelf life, and special directions on each container. If the material dating is in code, provide the Project Engineer the key to interpret the code.

Store materials in enclosed, power-ventilated structures that provide protection from weather and do not exceed manufacturer's recommended storage temperatures. Use a continuous recording thermometer to measure and document material storage temperatures. Store flammable materials in accordance with federal, state, and local regulations.

Containers of paint shall remain unopened until required for use. Labeled information shall be legible and checked at the time of use. Use the oldest paint of each kind first.

Immediately remove materials from the job site that are damaged, rejected, deteriorated, or that have exceeded specified shelf life or storage temperatures.

811.06.4 Surface Preparation: Existing coating systems may contain lead and other heavy metals. Existing surface profile is unknown and may or may not contain mill scale. Actual conditions across the structure may vary. Verify existing condition prior to bid in accordance with 102.06.

Surface preparation shall be in accordance with the plans, specifications and Table 811-2.

Table 811-2
SSPC Abrasive and Surface Preparation Standards

Designation	Definition
SP1	SSPC-SP1, Solvent Cleaning
SP2	SSPC-SP2, Hand Tool Cleaning
SP3	SSPC-SP3, Power Tool Cleaning
SP6	SSPC-SP6/NACE No. 3, Commercial Blast Cleaning
SP7	SSPC-SP7/NACE No. 4, Brush Off Blast Cleaning
SP10	SSPC-SP10/NACE No. 2, Near-White Blast Cleaning
SP11	SSPC-SP11, Power Tool Cleaning to Bare Metal
SP15	SSPC-SP15, Commercial Grade Power Tool Cleaning
SP16	SSPC-SP16, Brush-Off Blast Cleaning of Non-Ferrous Metals
SP WJ-1	SSPC-SP WJ-1/NACE WJ-1, Waterjet Cleaning of Metals - Clean to Bare Substrate
SP WJ-2	SSPC-SP WJ-2/NACE WJ-2, Waterjet Cleaning of Metals - Very Thorough Cleaning
SP WJ-3	SSPC-SP WJ-3/NACE WJ-3, Waterjet Cleaning of Metals - Thorough Cleaning
SP WJ-4	SSPC-SP WJ-4/NACE WJ-4, Waterjet Cleaning of Metals - Light Cleaning
VIS-1	Guide and Reference Photographs for Steel Surfaces Prepared by Dry Abrasive Blast Cleaning
VIS-2	Standard Method of Evaluating Degree of Rusting on Painted Steel Surfaces
VIS-3	Guide Reference Photographs for Steel Surfaces Prepared by Hand and Power Tool Cleaning
VIS-4 / NACE VIS-7	Guide and Reference Photographs for Steel Surfaces Prepared by Waterjetting
VIS-5 / NACE VIS-9	Guide and Reference Photographs for Steel Surfaces Prepared by Wet Abrasive Blast Cleaning

Unless specified to be painted, galvanized, metallized, aluminum, or stainless steel metal elements of the structure, such as decorative lighting metalwork, utility conduits, roadway lights, and all non-metallic conduits and cables, shall be covered or protected and will not require cleaning. Do not blast non-metallic conduits, fittings, conductors, and cables on or around the

bridge. Electrical conductors and fixtures may be de-energized for the blasting or painting operation upon request. Disconnection time will be as negotiated with the utility company or as specified on the plans. Unless otherwise specified, costs associated with de-energizing and protection of electrical conductors will be included in this item. Replace in their entirety any conduit, fitting, conductor, and cable damaged by cleaning operations at no additional cost or time to the Department. Employ a lock out, tag out protocol at the various electrical disconnect switches.

For stainless steel or metallized surfaces specified to be painted, brush off-blast clean to SP16. For existing galvanized steel specified to be painted, prepare surfaces in accordance with ASTM D6386 and brush off-blast clean to SP16. For new galvanized steel specified to be painted, comply with 811.08.1.1.

Prepare shop and field contact (faying) surfaces in accordance with 807.05.2.4.

811.06.4.1 Mechanical Removal of Surface Defects: Remove all fins, tears, slivers, and burrs, and grind flat. Smooth sharp edges, corners, and flame cut surfaces and grind to a minimum 1/16-inch chamfer to achieve the required edge surface for coating. Remove weld slag and weld spatter. Conform to AASHTO/NSBA, *Steel Bridge Collaboration S 8.1 Section 5.1*.

811.06.4.2 Soluble Salts Detection and Removal: Unless not required by the plans, determine the chloride, ferrous, sulfate, and nitrate concentrations on steel surfaces using soluble salts test kits meeting the requirements of 811.03, "Soluble Salts Test Kit." Perform the tests after washing and prior to blasting. Additional testing may be specified on the plans. Measure the concentration levels using Multi-Step Ion-Specific Methods described in *SSPC Guide 15, Field Methods for Retrieval and Analysis of Soluble Salts on Steel and Other Nonporous Substrates*. Test three random locations in the first 1000 square feet and one random location for each subsequent 1000 square feet.

Ensure the non-visible surface contaminant concentration on surfaces prior to blasting do not exceed 7 μg per square centimeter for chloride ions, 10 μg per square centimeter for ferrous ions, 17 μg per square centimeter for sulfate ions, and 10 μg per square centimeter for nitrate ions.

When utilizing a Fully Automated Conductivity Measuring Technique, surface conductivity measurements of non-visible surface contaminant concentrations on surfaces prior to blast-cleaning do not exceed 70 micro-Siemens per centimeter.

When contamination exceeds specified levels, rewash the entire surface area and retest. If additional washing does not reduce the contamination to below specified levels, a surface treatment or water additive may be used. Use a surface treatment or water additive that is approved by the coating system supplier and the Project Engineer.

Additional testing, rewashing, treatment, additives, or cleaning contaminated surfaces and repainting will be at no additional cost or time to the Department.

811.06.4.3 Cleaning New Steel: Prepare surfaces for prime coating new steel in accordance with SP10.

811.06.4.4 Cleaning and Preparing Existing Steel and Existing Coatings: Prepare surfaces for prime coating steel or damaged areas of newly erected steel in accordance with SP10 or SP11.

Remove pack rust prior to solvent cleaning. Prior to blast cleaning, clean oil and extraneous materials from surfaces to be coated to an SP1 level. Notify the Project Engineer immediately when any structural steel appears to be defective.

When overcoating existing coatings, or when removing and replacing all or portions of an existing coating, clean, wash, test, and remove soluble salts. Clean using abrasive blast, hand tool, or power tool method to remove corrosion and specified limits of existing coatings. Feather back edges of existing coating to remain a minimum of 3 inches around the perimeter of existing coating removed to provide a smooth transition. Verify edges of existing coating are intact by probing with a dull putty knife in accordance with SP2.

Provide surfaces to be coated which are clean, dry, and free from oil, grease, dirt, dust, soluble salts, corrosion, peeling coating, caulk, weld spatter, mill scale, and any other surface contaminants. Prepare steel and coating surfaces to meet cleanliness and surface profile requirements as specified on the plans. Roughen previously applied coatings to be overcoated in accordance with coating manufacturer's recommendations for development of proper inter-coat adhesion.

Protect adjacent surfaces in accordance with 811.05.8.3.

Sequence the surface preparations and coating operations so freshly applied coatings will not be contaminated by dust or foreign matter.

811.06.4.5 Washing: Wash existing coated surfaces using water and pressure to meet the requirements of SSPC-SP WJ-4 LPWC (3,500 to 5,000 psi) prior to abrasive blasting. Wash existing coated surfaces that are to be overcoated using water and pressure to meet the requirements of SSPC-SP

WJ-4 HPWC (5,000-10,000 psi). Provide surfaces meeting 811.06.4.2 requirements. Surface treatment or water additives to reduce soluble salt concentrations are allowable, with the approval of the coating system manufacturer.

Contain the resulting pressure-wash water in accordance with SSPC Guide 6 Class 2W. All wash water, regardless of removal method, shall be presumed to be hazardous until determined to be non-hazardous by testing. Submit wash water test results to the Project Engineer for record prior to water disposal. Dispose of pressure-wash water in accordance with all State and Federal regulations.

For new steel erected in the field, wash primed steel surfaces to SSPC-SP WJ-4 LPWC (3,500 to 5,000 psi) prior to stripe coat and intermediate coat application.

811.06.4.6 Abrasive Blast Cleaning: Prepare metal surfaces, as indicated on the plans and in the specifications. Unless otherwise specified, prepare metal surfaces to be painted by abrasive blast cleaning to SP10 level. Use VIS-1 that corresponds to the initial rust condition to judge acceptable cleanliness, but the written requirements take precedence in acceptance.

Perform abrasive blasting operation during daylight hours. Night-time abrasive blasting will be allowed if an external light plan is submitted to the Project Engineer for review and accepted. Provide external lighting that allows for effective environmental monitoring.

Other means and methods under this section, such as mechanical means or specialized equipment, to clean the surface to contract requirements may be allowed if, after review by the Project Engineer, the equipment does not damage the structure. After abrasive blast cleaning, ensure the surface profile meets the specification limits of 1.5 mils to 3.0 mils for new steel and of 1.5 mils to 3.5 mils for existing steel. Coating manufacturer allowable limits different than these values shall not be substituted. Determine the surface profile using "X-Coarse Press-O-Film" replica tape in accordance with ASTM D4417, *Standard Test Methods for Field Measurement of Surface profile of Blast Cleaned Steel, Method C*.

If the profile falls between 1.5 mils and 2.0 mils, average one test with "Coarse" and one test with "X-Coarse" to obtain a reading.

For Quality Assurance, the specified sufficient number of locations to characterize the surface in ASTM D4417 section 6.3.5 will be defined as three random tape samples in the first 1000 square feet of surface area and one additional random tape sample for each subsequent 1000 square feet of surface area in a work area. A work area will be defined as the area cleaned

during the same shift using the same blast equipment and abrasive, represented by all the samples taken in that area. Any changes made to personnel, blast equipment, or abrasive will result in establishing a new work area.

On the first day of abrasive blasting operation, blast two metal panels to the specifications. The metal panels shall be ASTM A709 Grade 36 and measure 0.25 inch by 8.5 inch by 11 inch, which the contractor and engineer shall date and initial. Coat one panel with a clear, non-yellowing finish as a visual example and use the uncoated panel to calibrate the dry film thickness gauges used on the project. Wrap panels in corrosion inhibitive paper and keep in a clean, dry area. Use panels as a comparison standard throughout the project.

Upon initiation of abrasive blasting operation on structures containing pack rust areas, blast clean to an acceptable level at least one representative area of pack rust selected by the Project Engineer that is easily accessed. Coat the area with a clear, non-yellowing finish. Use as a visual comparison standard throughout the project.

On the first day of abrasive blasting operation, blast the structure for no more than 15 minutes, blow down the prepared surface, and perform three surface profile tape tests in the presence of the QA inspector. If the average surface profile does not fall within specifications, adjust means and methods (grit size, pressure, standoff distance, nozzle angle, etc.). Perform further 15-minute maximum blasting, cleaning, and testing until the surface profile is within specifications, at which time the contractor will be allowed to proceed with full production blast cleaning. Rework any area that does not meet specifications until it meets the requirements of the contract.

Schedule cleaning and painting so surfaces to be coated are completely free of any contaminant prior to coating. Remove all abrasive, dust, and paint residue from steel surfaces and any scaffolding, staging, or support steel above the area with a commercial grade HEPA filtered vacuum cleaner equipped with a brush type cleaning tool, or by double blowing. If using the double blowing method, complete all blow-down operations within the contained area and then vacuum all exposed top surfaces of structural steel (flanges, longitudinal stiffeners, splice plates, hangers, etc.). Test all horizontal prepared surfaces for cleanliness prior to coating by simply wiping the surface with a finger; any accumulation requires re-cleaning. If prime coat is not applied within eight hours after the surface has been approved for coating application, the surface will require an additional QA inspection.

The QC Inspector shall verify compliance with applicable specifications and conduct required testing prior to notifying the Project Engineer that work area surfaces are ready for primer application.

The QA Inspector will conduct surface profile readings in accordance with ASTM D4417 Method C and the contract. The work area will be divided up and tape readings will be taken. All cleaned structural members in the work area shall be represented in the random sampling (truss post, chord, and diagonals, beam flanges and webs, diaphragms, cross-frames, etc.). If the averages of all the QA readings fall within contract specification, the area is compliant and may be primed. If the average of all the QA readings falls outside of the contract limits and the cause is from more than one sample location, the work area is non-compliant and cannot be primed. If the average of all the QA readings falls outside of the contract limits and the cause can be attributed to one location, then the QC Inspector will be notified of the non-compliant work, will be requested to accompany the QA Inspector on a second sampling of the identified area, and will witness the sampling. The secondary sampling will consist of three individual tape readings taken at the initial out-of-compliant location within a 1-square-foot area. Substitute the average of the three secondary readings for the initial out-of-compliant location sample in calculating a new overall average of the work area. If the new average for the work area falls within the contract requirements, the area is compliant and may be primed. If the new average does not fall within the contract requirements, the work area is non-compliant and shall not be primed. Re-work and re-test all work areas that are non-compliant until they fall within specifications.

Primer applied to non-compliant work areas will result in reporting the activity to the QCS, notifying the Project Engineer, documenting in the DIR, and reworking of the area until surface is compliant.

Perform abrasive blast cleaning within a containment system and confine all particulates.

811.06.5 Application: Apply a complete coating system to all metal surfaces specified to be coated. Apply coatings in accordance with the manufacturer's recommendations, SSPC-PA1 *Paint Application Specification No. 1* and the contract.

Prior to the application of prime coat, inspect the substrate for contamination and defects, and prepare the surface in accordance with 811.06.4. For new steel, the Department's Fabrication Inspector will perform the QA required at the shop. For existing steel, provide the Project Engineer with passing QC documentation for cleanliness and surface profile.

Permit the Project Engineer to inspect the substrate to verify proper cleanliness and surface profile. Apply prime coat after acceptance of the surface preparation by the Project Engineer.

Prior to the application of each subsequent coat, inspect the coating for contamination and defects. Provide the Project Engineer with passing QC documentation, including DFT readings conforming to SSPC-PA2. Permit the Project Engineer to inspect the coating and verify proper surface preparation and dry film thickness. Apply subsequent coat after acceptance of the previous coat by the Project Engineer.

Application of coats without the Project Engineer's acceptance of the underlying surface or previous coat will be considered non-compliant work.

Apply each coat, including a stripe coat, in a color that contrasts with the substrate or preceding coat.

Provide a finished surface free from foreign contaminants, grease, stains, dry spray, overspray, runs, sags, drips, excessive paint build up, ridges, waves, laps, streaks, brush marks, blisters, bubbles, craters, mud cracking, holidays, and variations in color, texture, and finish (glossy or dull). Apply coating so each coat has complete coverage (including corners and crevices), has a film of uniform thickness, and bonds to the underlying surface.

811.06.5.1 Paint Systems for New Steel and Cleaned Existing Steel: Apply each coat of paint with airless or conventional spray equipment in a fine, even spray. If thinning of paint is allowed, thin in accordance with the paint manufacturer's recommendations, but in no case exceed 10 percent. On surfaces inaccessible to spray equipment, paint shall be applied with brush or approved daubers to ensure coverage.

When a zinc paint system is specified, apply an inorganic zinc for shop priming, an organic zinc for field priming on non-faying surfaces, and an organic zinc for stripe coating. Prime faying surfaces in accordance with 807.05.2.4.

Unless otherwise specified, apply intermediate coat and topcoat paint for new steel after field erection.

Base dry-to-handle curing time on the temperature and relative humidity requirements of the manufacturer's product data sheet curing schedule. Provide 72 hours curing time before shipping.

811.06.5.2 Quality Control and Quality Assurance (QC/QA): The painting contractor is responsible for QC regardless of the fact that the Department, the Project Engineer, or their representatives may be present. The Project Engineer will perform QA inspection.

The QC Inspector shall, at a minimum, perform the following tests and record the resulting information in accordance with the referenced procedures and frequency for all cleaning and painting operations unless otherwise specified:

- Relative humidity readings outside the containment prior to initial blasting and every 2 hours thereafter; readings inside the containment prior to and every 2 hours during painting.
- Temperature readings of air near but outside the containment prior to initial blasting and every 2 hours thereafter; readings of air and steel inside the containment prior to and every 2 hours during painting.
- Daily surface profile measurements, as per ASTM D4417 Method C, before coating.
- Daily blotter test results, as per ASTM D4285, prior to blasting during field operations.
- Daily dry film thickness measurements, as per SSPC-PA2, after each coat of paint has dried.
- Daily air movement measurements inside containment before blasting for field operations. Acceptance criteria per ventilation requirements in the plan notes and accepted contractor containment plan.
- Wind speed and direction daily every 2 hours. Take readings near members being coated.
- For the initial section of work, inspections by the Project Engineer, contractor, and lead coating inspector will take place for each phase described in 811.05.12 upon completion of each respective phase. Request in writing to the Project Engineer to schedule these inspections.

811.06.5.3 Weather and Temperature Limitations: Do not spray coatings when the measured wind speed in the immediate coating area is above 15 miles per hour. Do not apply coatings when contamination from rainfall is imminent or when the ambient air temperature, relative humidity, dew point temperature, or temperature of the steel is outside limits provided on the coating manufacturer's product data sheet and these specifications.

Protect the cleaning and painting area of the structure from environmental conditions during and after the coatings application. Rework any coating which has been adversely affected by the environmental conditions.

If utilizing fans, heaters, ventilators, or other equipment to achieve acceptable environmental conditions for coating applications, maintain those conditions until coating reaches a dry-to-touch condition and as recommended by the coatings manufacturer. Provide a time lapse recording instrument for monitoring all controlled conditions during this period.

During application, coatings shall be between 40°F and 100°F and according to the manufacturer. Do not apply paint unless the surface temperature of the metal is at least 45°F and rising, and not in excess of 120°F and according to the manufacturer.

Do not apply coatings to wet or damp surfaces, during rain, snow, fog, or misty conditions, or when the steel surface temperature is less than 5°F above the dew point.

Do not apply coatings when the relative humidity exceeds 85 percent and according to the manufacturer. Maintain temperature and humidity limits from before commencement of painting to the time of dry-to-touch.

811.06.5.4 Penetrating Sealer: If required by the plans, apply to all locations where irremovable crevice corrosion remains after all surface preparation best efforts have been made, as determined by the Project Engineer. Apply penetrating sealer to crevice corrosion and allow curing in accordance with the manufacturer's recommendation prior to applying subsequent coatings.

811.06.5.5 Stripe Coat: Stripe coat is a separate coat and operation, and is applied to welds, corners, edges, crevices, seams, fastener assemblies, and rough or pitted surfaces.

For shop applied primer, apply stripe coat in the field after erection.

For existing steel, apply coatings and penetrating sealer in the following sequence.

Apply full prime coat to all areas except where penetrating sealer will be applied.

Apply penetrating sealer.

Apply stripe coat.

Extend stripe coat a minimum of 1-inch beyond the edge, seam, fastener assembly, etc. In general, use brush or dauber to apply stripe coat and work into crevices and uncoated areas. For continuous uninterrupted edges (not lattice or built-up members), apply stripe coat by spray or rollers.

Stripe coating procedures are subject to acceptance by the Project Engineer.

811.06.5.6 Caulking: For painted steel, apply caulk between applications of intermediate coat and top coat. When a two coat paint system

is used, caulk between application of primer coat and top coat. For unpainted weathering steel, field clean surfaces to receive caulk and apply caulk as soon as possible after cleaning. Prepare surfaces and apply caulking in accordance with caulk manufacturer's recommendations.

Use caulk to seal the perimeter of all faying surfaces, cracks, crevices, joints, gaps less than 1/2 inch, and skip-welded joints. For gaps 1/2 inch or greater, treat in accordance with the plans. Apply caulking bead with a smooth uniform finish and cure according to the caulk manufacturer's recommendations.

811.06.5.7 Protection of Surfaces: Protect surfaces and working mechanisms not intended to be coated during application of coatings. Clean surfaces that have been contaminated with coatings or other substances until all traces of the coating or substance have been removed. If contaminated surfaces were lubricated, solvent clean to remove contaminants and lubricant, and re-lubricate as directed by the Project Engineer. Do not allow material from cleaning and coating operations to be dispersed outside the intended work area. Remove and repair, to the satisfaction of the Department as a condition of Final Acceptance, all contamination, scratches, marks, stains, and other effects to the work introduced by cleaning and painting, including the installation and removal of temporary works, which are deemed unacceptable by the Department.

811.06.5.8 Mixing and Thinning: Mix all coatings in accordance with the manufacturer's product data sheet. Only mix complete kits. Use thinners and solvents in accordance with the requirements of the coating manufacturer's product data sheet. Perform all mixing operations over an impervious surface with provisions to prevent runoff of any spilled material.

811.06.5.9 Application Methods: Use coating application equipment to apply coatings per coating manufacturer's product data sheet. Application with brushes is acceptable for minor touchup of spray applications, stripe coats, or when otherwise approved by the Project Engineer. Adjust spray equipment to produce an even, wet coat with minimum overspray. Apply coatings in even, parallel passes, overlapping 50 percent. Agitate coatings during application as required by the coating manufacturer's product data sheet to provide uniform consistency.

Touch up missed or damaged locations after a coat dries and before applying succeeding coats.

Strictly abide by the manufacturer's specified recoat period. Apply no paint until the preceding coat has met the recoat criteria and has been both

tested and accepted by the Project Engineer. Where conditions require recoat after the specified recoat period, employ the manufacturer's recommended remedial procedures. Any coating removed during this process shall be replaced prior to applying additional coats. Protect adjacent surfaces already properly coated.

811.06.5.10 Thickness and Completeness of Coats: Apply coatings to the DFT as identified in the AML for the paint system selected and at least the number of coats specified. When required, apply penetrating sealer to the amount specified by the manufacturer and accepted by the Project Engineer.

After application of each coat, thoroughly inspect the surfaces for completeness of coat and measure the DFT in accordance with SSPC-PA2. When the DFT does not meet specifications, repair in accordance with the manufacturer's recommendations. Retest the repaired areas and remediate as required to the satisfaction of the Project Engineer.

811.06.5.11 Coating, Drying, and Curing: Apply coatings within the time specified by the coating manufacturer's product data sheet for drying and recoating.

Before handling the coated member, test for cure in accordance with the manufacturer's recommended method.

811.06.5.12 Coating Finish: Protect the surface from contamination and disfigurement by construction activities. All marred painted surfaces are considered damaged areas and require repair.

811.06.5.13 Touchup and Repair: Repair all damaged or defective coatings prior to application of subsequent coatings. Repair with materials and to a condition equal to that of the coating system specified. Repair all dry spray by removing underlying coat and repair to meet original requirements. Protect adjacent coated surfaces and leave in place until the paint film has properly dried. Do not handle, work on, or disturb items which have been coated until the paint coat completely dries and hardens.

Repair any damaged, unclean, or uncoated surface with a written repair procedure approved by the coating manufacturer and accepted by the Project Engineer.

811.06.6 Stenciling: After production painting is complete, stencil the date of completion in MM/YYYY format, coating manufacturer, and type of paint system applied to each structure painted in the project. Place stenciled information on a painted exterior steel superstructure surface approximately 10 feet from each side and each of end of the structure and visible in profile view at specific locations determined by the Project Engineer. Provide $2^1/_2$ -

inch high block letters using paint that forms a contrast with the background and is compatible with the paint system used.

811.07 CLEANING AND PAINTING OTHER ITEMS.

811.07.1 Permanent Sheet, Pipe, and H-Piles: Prepare the substrate in accordance with 811.06.4. Provide a surface profile in accordance with the manufacturer's product data sheet, but in no case less than 2.5 mils. Re-blast piles not coated within eight hours of blasting or if the surface to be coated no longer meets the requirements of SP10.

Unless otherwise specified, apply coal tar epoxy-polyamide paint system. Apply paint system to sides of piles from the top of the piles to a depth of ten feet below the lowest of the design ground surface or the design scour depth, except no coating is required on the interior of pipe piles.

Apply the paint system in accordance with the following:

Apply in two coats. The time interval between the first coat and the second coat shall be in accordance with the coating manufacturer's published specifications. Apply the first coat to yield a DFT of 8 to 10 mils. Apply the second coat to yield a total DFT of the two coats between 16 and 20 mils.

After coating applications, the Project Engineer will observe the contractor's inspection of the surfaces and make film thickness measurements at the approximate rate of one for each 25 square feet of area unless deficient thickness is found. In that case, the rate of sub-measurements will be increased as required to determine the extent of the deficient area. Test and remediate in accordance with 811.06.5.10 and 811.06.5.13.

Cure coating in accordance with 811.06.5.11. Do not handle until coating is cured.

811.07.2 Aluminum: Aluminum surfaces placed in contact with or fastened to non-galvanized steel members are to be thoroughly coated with an accepted aluminum impregnated caulking compound. Paint aluminum surfaces in contact with concrete with a heavy coat of alkaline resistant bituminous paint or a coat of zinc chromate paint and allow drying before placing.

811.07.3 Lumber and Timber: Satisfactorily clean and paint lumber and timber requiring painting with three coats of the specified paint. If not specified, use the paint selected by the Project Engineer. Process treated timber to be painted in accordance with Section 1014.

811.07.4 Machinery: Clean machinery surfaces specified to be painted using full containment and prepare surfaces in accordance with 811.06.4.

Prepare flexible couplings, reducers, bearings, electric motors, brakes, limit switches, and equipment with shaft seals, in accordance with SP1, SP2, and VIS 1. Contamination or abrasive blasting of these items will require remediation that may include disassembly and cleaning, replacement of seals, and/or replacement of equipment, all at no additional time or cost to the Department.

Hand-abrade surfaces having baked on enamel in accordance with paint system manufacturer recommendations. Prepare other machinery components in accordance with SP10 or SP11, and VIS-1.

Provide glossy finish on machinery top coat. Provide top coat color to match Federal Safety Orange on rotating shafts, couplings, and open gearing.

811.08 GALVANIZING AND METALLIZING METAL PARTS AND SURFACES

811.08.1 Galvanizing: The following criteria shall be properly controlled and shall meet standards that are satisfactory for the galvanizing process.

- Defects arising from fabrication.
- Thickness and uniformity of coating.
- Adherence of coating.
- Appearance.
- Embrittlement.

Handle, stack, transport, and erect galvanized parts to protect the coating and its appearance.

Assemble galvanized parts with nonabrasive equipment. Galvanize after fabrication of hardware. Galvanize components of bolted assemblies separately before assembly.

Satisfactorily plug galvanizing drip holes in handrails and as directed.

Comply with ASTM A123 for galvanizing by the hot-dip process iron and steel products both un-fabricated and fabricated from rolled, pressed, and forged steel shapes, plates, bars, and strips greater than or equal to $^{1}/_{8}$-inch thickness. Galvanize after fabrication into the largest practical sections. Fabrication includes all operations such as shearing, cutting, punching, forming, drilling, milling, bending, welding, and riveting. When it is necessary to straighten sections after galvanizing, perform such work without damage to the zinc coating.

Unless otherwise specified, comply with ASTM A153 for galvanizing of iron and steel hardware or accomplish by an approved mechanical galvanizing method complying with ASTM B695 that provides the same thickness of coating.

Comply with ASTM F2329 for galvanizing by the hot-dip process carbon and alloy steel bolts, screws, washers, nuts, special threaded fasteners, and anchor bolts.

ASTM A490 bolts shall not be galvanized. When ASTM A490 bolts are specified to connect galvanized parts, use coated bolts to prevent electrolytic action.

Comply with ASTM A780 for the repair of galvanized surfaces. Use zinc-based solders or sprayed zinc to repair damaged galvanized surfaces deemed visible to the public by the Project Engineer. Other damaged galvanized surfaces may be repaired using brush applied paints containing zinc dust.

The galvanizer shall utilize all of the options available to prevent "white rust" from occurring. However, should "white rust" occur and, in the opinion of the Project Engineer, it is excessive or unsightly, it shall be cause for rejection. Should rejection of the product occur, the galvanizer or contractor must submit a repair procedure to the Project Engineer for review prior to implementing corrective action.

811.08.1.1 Galvanized Surfaces to be Painted

Detail galvanized surfaces to be painted on shop drawings. Notify the galvanizer prior to galvanizing these surfaces. Comply with ASTM D6386 for preparation of surfaces to be painted after galvanizing. Do not apply water quench treatment, chromate conversion coating treatment, wash primer surface preparation or acrylic passivation surface treatment.

811.08.2 Metallizing: Comply with Joint Standard SSPC-CS 23.00/AWS C2.23M/NACE No. 12 "Specification for the Application of Thermal Spray Coatings (Metallizing) of Aluminum, Zinc, and Their Alloys and Composites for the Corrosion Protection of Steel" and specific requirements of the plans. Coating thickness shall be a minimum of 10 mils. Unless otherwise specified, provide thermal spray coating composed of 85 percent aluminum and 15 percent zinc. Perform tensile bond tests prior to sealing. Perform bend tests on coupons containing thermal spray coating with no sealer applied. Apply seal coat as soon as possible, but not later than 8 hours after application of thermal spray coating.

811.09 PROTECTION OF THE ENVIRONMENT, PUBLIC, AND WORKERS. Comply with submitted and accepted plans and programs to protect the environment, public, employees, and other workers from toxic exposure to heavy metals, as well as releases and emissions of hazardous materials and nuisance dusts. Conduct all coating removal and application operations in accordance with all applicable federal, state, and local laws, rules, regulations, and ordinances, including, but not limited to, CFR, EPA, OSHA, and DEQ.

Comply with submitted and accepted contingency plan for the remediation of water and land in the event of contamination by solid or liquid paint and contaminated water.

Comply with submitted and accepted procedures to prevent and protect the public (persons and property) from paint damage. Comply with submitted and accepted remediation plan for damage.

The contractor is responsible for compliance with rules and regulations including all permits and their requirements.

811.09.1 Environmental Protection: Comply with the following as a minimum:

- 40 CFR § 50, *National Primary and Secondary Ambient Air Quality Standards*
- 40 CFR § 60, *Standards for Performance for New Stationary Sources,* Appendix A, *Test Methods*
- 40 CFR § 261, *Identification and Listing of Hazardous Waste*
- 40 CFR § 262, *Standards Applicable to Generators of Hazardous Waste*
- 40 CFR § 263, *Standards Applicable to Transportation of Hazardous Waste*

- 40 CFR § 264, *Standards for Owners and Operators of Hazardous Waste Treatment, Storage, and Disposal Facilities*
- 40 CFR § 268, *Land Disposal Restrictions*
- EPA SW-846, *Test Methods for Evaluating Solid Waste-Physical/Chemical Methods*
- Louisiana Revised Statutes La. R.S. 30:2001, *et seq.*, Louisiana Environmental Quality Act and enabling regulations found in Louisiana's Environmental Regulatory Code (most recent edition), particularly:
- Louisiana Administrative Code LAC 33:IX.101 *et seq.*, Water Quality Regulations.
- LAC 33:V.101 *et seq.*, Hazardous Waste and Hazardous Materials.
- LAC 33:III.101 *et seq.*, Air Quality Regulations.
- La. R.S. 49:214.21 *et seq.*, State and Local Coastal Resources Management Act of 1978, and enabling regulations found in the LAC LAC 43:I.701, *et seq.*, Coastal Management.

811.09.2 Pollution Control: Maintain a working knowledge and staff experienced in conforming with, monitoring, and adjusting to the following referenced industry guidelines for pollution control:

SSPC Guide 6, *Guide for Containing Debris Generated During Paint Removal Operations,* as published by The Society of Protective Coatings (SSPC).

SSPC Guide 7, *Guide for Disposal of Lead-Contaminated Surface Preparation Debris,* as published by SSPC.

Immediately cease all operations in the event a violation of any environmental regulation or when failure to properly execute any pollution control provisions occurs. Resume operations after written proposed corrective procedures have been submitted to and approved by the Project Engineer and implemented.

811.09.3 Permits: Seek permit determination from regulatory agencies to avoid any potential permit non-compliance issues during work activities.

811.09.4 Ambient Air Quality Compliance and Protection of the Air:

811.09.4.1 Visible Emissions: Assess the visible emissions using *EPA Method 22, Timing of Emissions* as defined by 40 CFR § 60, Appendix A, *Standards of Performance for New Stationary Sources*. During abrasive blasting, do not allow visible emissions from a containment to exceed a random cumulative duration of more than one percent of the work day (SSPC Guide 6, *Level 1 Emissions*). A work day shall be defined for purposes

of visible emission assessment as an 8-hour day. This amounts to a cumulative emission duration limit of 4.8 minutes per work day. Emissions occurring in any one hour of any work day that cumulatively exceeds 36 seconds shall be cause for immediate suspension of cleaning work and modification or adjustment of the containment system to eliminate the source of emissions prior to resuming cleaning operations.

For quality assurance, visible assessments will be conducted by an independent third party environmental testing firm under separate contract with the Department. These visible assessments of emissions may be used to indicate the need for immediate changes in containment or work practice.

During pressurized water cleaning, do not allow visible emissions from a containment to exceed a random cumulative duration of more than 10 percent of the work day (SSPC Guide 6, *Level 3 Emissions*).

811.09.4.2 Visual Accumulation: Conduct all activities so that paint, solvents, fuel, waste, abrasives, dust, lead contaminated materials, debris, etc. are not released or spilled onto the pavement, soil, water, sediment, or into the air or storm sewers.

Visual accumulation on the bridge deck, ground, or any other surface outside the constructed containment, as determined by the Project Engineer, shall result in the immediate suspension of the emission generating activities. Determine the source of the emissions and perform corrective measures to prevent further emissions. Clean up all visual accumulations by vacuuming or other appropriate methods and contain and store emitted materials to the satisfaction of the Project Engineer. Delays due to deficient work will be at no additional time or cost to the Department.

811.09.4.3 Total Suspended Particulate (TSP) Matter

Control emissions from the containment area to prevent exceeding the TSP Lead Level of 1.5 μg per cubic meter over a 24-hour period.

811.09.4.4 Penalty for Exceeding TSP Lead: An independent third party environmental testing firm under separate contract with the Department will conduct TSP Lead monitoring in accordance with 40 CFR § 50, Appendix B, *Reference Method for Determination of TSP Matter in the Atmosphere (high volume sampler required)*, and 40 CFR § 50, Appendix G, *Reference Method for Determination of TSP Matter Collected from Ambient Air* and position the TSP Lead monitoring equipment in general accordance with 40 CFR § 58, *Ambient Air Quality Surveillance*. The Department reserves the right to place TSP monitors anywhere within the project limits, including the regulated area.

Whether or not a penalty may be assessed under the provisions below, the Department shall have the authority to suspend and shall suspend all cleaning operations whenever air sampling results taken at any location around the work site indicate that TSP Lead emissions have exceeded the specified limit defined in 811.09.4.3**.** The Department will provide the contractor with written notice of suspension and all cleaning operations shall be suspended until corrections are made to the containment or work procedures are modified to comply with these requirements.

The Department will monitor and review the TSP Lead sample results. The first set of sample results that exceed the limit will set the penalty date. The Department will not assess the penalty for all sample results on and previous to the penalty date. The Department shall assess the penalty for all sample results that exceed the limit after the penalty date.

The Department shall deduct from the next payment to the contractor for the amount earned, a penalty in the amount of $1,500 for each 24-hour period, subsequent to the penalty date, in which one or more TSP monitors indicates that lead emissions exceeded the limit. The contractor shall be liable for this penalty on the basis of the aforementioned sample results, whether or not the Department has sustained any loss or damage, and whether or not the Department has incurred any cost as a result of lead emissions in excess of the limit. In addition, the contractor shall reimburse the Department for any penalties or fees assessed against it arising from such occurrences. The contractor waives any and all right to contest the sample results and any right to contest an adjustment of the contract price in the amount of any penalties or fees on the grounds that lead emissions in excess of the limit did not cause injury or harm to the Department or to third persons.

Upon the Department receiving the third TSP failing report after the penalty date, the contractor will be required to suspend all cleaning operations, examine the entire operation to determine the cause of the lead emissions in

excess of the limits, determine appropriate corrective measures, revise, and resubmit the previously accepted submittals to reflect the corrective measures to the engineer for review, then take the appropriate steps before resuming production.

In the event that work is suspended for corrective measures in accordance with the previous paragraphs TSP Lead monitoring, Contract Time will not be suspended.

811.09.4.5 Regulated Areas: Establish regulated areas around the work site to prohibit entry of unauthorized persons. Clearly mark the regulated area by the use of warning signs, rope, barrier tape, or temporary construction fencing.

Conduct monitoring in accordance with the NIOSH procedures upon initiation of dust producing operations.

811.09.4.6 Soil/Ground Quality: Submit a drawing showing the locations of the regulated areas, sensitive receptors, and storage and transfer areas to the Project Engineer for record and stake out these areas on the ground so the soil sampling can be performed.

Inspect the ground beneath and in proximity to the structure in the presence of the Project Engineer and the Environmental Compliance Unit for visible paint chips to establish an initial job site cleanliness standard. When heavy metals are in the existing coatings, the Department will collect soil samples prior to and after construction activities and test for heavy metals. If the Department determines that construction activities increased the heavy metal content in the soil, return the site to the pre-job levels or as directed at no additional cost or time to the Department. Submit proposed remediation procedure to the Project Engineer for review prior to initiation of remediation work.

The Department may conduct additional soil sampling and testing as necessary to determine the effectiveness of pollution controls, remediation methods and/or need for additional remediation.

811.09.4.7 Water Quality: Do not release, discharge, or otherwise cause hazardous materials, debris, waste, or paint chips to enter the water. Protect against releases due to rain and methods of surface preparation from reaching rivers, streams, lakes, storm drains, or other bodies of water.

811.09.5 Containment System for Field Work: Comply with Section 817, "Temporary Works" for submittal of Containment System Plan, and design, construction, operation and maintenance of containment system.

No erection of containment or scaffolding equipment is allowed until acceptance of the containment systems submittal.

Isolate the immediate work area to prevent pollution of air, water, and soil. Conduct all blasting and painting operations under containment. Prevent paint or debris, solids or liquids, from escaping the containment system. Emissions of lead-containing dust and debris shall be kept to levels below that required by all federal, state, and local regulations, and specifications. If constructing a suspended platform, use rigid or flexible materials as needed to create an air and dust impenetrable enclosure.

Filter air exhausted from the containment system by use of filtering systems or dust collectors. Provide containment equipment with air filtration systems with new unused filters and purged of contaminants prior to delivery to the project site. Maintain in good working condition. No dust discharge will be allowed from the exhausted air off the filters, dust collectors, or any vacuum truck used for pickup of spent materials.

Control the work environment within containment as required by OSHA regulations 29 CFR § 1926.62. Design as a minimum to provide ventilation of 100 feet per minute for cross draft and 60 feet per minute for down draft. These flow rates are not intended to serve as a bench mark that ensures compliance with OSHA standards, nor a safe working condition, but are minimum design criteria to limit the size of the containment system. Design mechanical ventilation system to reduce the airborne concentration of particulate matter inside of the containment to ALARA using best industry practices and using BADCT to achieve compliance with OSHA and EPA regulations.

Maintain on site copies of the Pollution Control and Monitoring Plan throughout the duration of the project.

811.09.6 Worker Protection Compliance: Comply with the submitted Worker Protection Plan outlined in 811.05.10.

Examine personnel that work at the project site in accordance with 29 CFR § 1926.62(j) (3) (ii) (A)-(F) prior to their working on the project.

Submit for record to the Project Engineer the following lead health/safety items for personnel that work at the project site at the times indicated.

Blood level test results initially, every two months, at the end of lead removal operations, and when personnel leave the job.

Personal air monitoring results for all job tasks after first full day of normal operation, and every three months.

Current lead training certification initially, and every 12 months.

Current respirator medical evaluation initially, and every 12 months.

Current respirator fit test initially, and every 12 months.

Current respirator training certification initially, and every 12 months.

Tabulate test results using name and job classification for the duration of the project. Failure to submit and maintain these records will be grounds for shutdown of all lead exposure activities.

As a minimum, provide exposure assessments, exposure monitoring, protective clothing, hygiene facilities, discarded clothing disposal facilities, on-site changing areas, showers, eating facilities, hand washing facilities, safety training, and personal protection equipment, as required by *OSHA Interim Final Rule on Lead Exposure in Construction* on projects where removal of lead based paint will occur.

As a minimum, provide the Department's personnel and its representatives protective clothing, hygiene facilities, discarded clothing disposal facilities, on-site changing areas, showers, eating facilities, hand washing facilities, safety training, and personal protection equipment conforming to the requirements of the *OSHA Interim Final Rule on Lead Exposure in Construction* on projects where removal of lead based paint will occur.

As a minimum, provide all personnel, including the Department's personnel and its representatives, interim respiratory protection, which shall include a respirator, respirator training, and fit testing, and a respirator program until an exposure assessment is performed and actual exposure is determined. Base the interim respirator protection on anticipated exposure levels greater than the Permissible Exposure Limit (PEL) (50 µg per cubic meter), but less than 10 times the PEL (500 µg per cubic meter). As a minimum, provide a half mask air purifying respirator with HEPA filters, which provides a respiratory protection factor of 10. Provide the appropriate respirator if, through exposure assessment, exposure level is greater than 500 µg per cubic meter.

811.09.6.1 Training: Submit training information in accordance with 811.05.11.

Train all workers and employees on the project as required by *OSHA Interim Final Rule on Lead Exposure in Construction*. Conduct training within the DOTD District where the project is located at a time and location as approved by the Project Engineer. Provide each worker and employee with a Certificate of Training.

811.09.6.2 Assessment: Conduct an employee exposure assessment in accordance with the *Interim Final Rule* on at least one worker designated by the Project Engineer. Fully document and report results of initial and any additional exposure assessments in time frames consistent with the *Interim Final Rule* and forward directly to the Project Engineer.

811.09.7 Debris Handling and Management: Remove debris generated from cleaning operation, including abrasive blast residue, spent blast medium, rust, mill scale, paint particles dust from the contaminant area, and place in leak proof containers. Remove debris from the containment area at least once per day. Transfer of debris material from the contaminant area to the containers, movement of containers within the work site, and movement of containers at the temporary storage site shall be such that no pollution of the environment will occur and workers are fully protected. The filled containers may be moved to a temporary storage site at the work site (same or geographical contiguous property) by the contractor. Transportation of the containers directly to an off-site storage site, temporary or permanent, must be done in accordance with 40 CFR § Part 263, and LAC 33:V. The contractor will be responsible for obtaining temporary off-site storage at their expense if utilized. The temporary storage site shall be secure, providing protection from migration of the debris into the environment, vandalism, and public access. Display warning signs prominently around the perimeter of the site. The debris may remain at the temporary storage site no longer than 90 calendar days.

811.09.7.1 Handling Debris: Handle debris generated during the bridge cleaning and painting process in accordance with one of the following.

Collect spent blast medium, rust, mill scale, paint particles, and dust from the contaminant area, dust collector debris, and air filtration equipment filters, place in leak proof containers and designate as "Listed Hazardous Waste" based on "process knowledge." Clearly mark these containers as hazardous, along with tare weight of the container, origin of material, and date of material collection, all with weather resistant labels. Transport to a beneficial reuse facility, such as a lead smelter. At the completion of all structural cleaning, clean and purge all support equipment, collect all used blast media and support equipment filters, and take to the beneficial reuse facility. The facility shall provide the Department with certification that the lead was reclaimed and that the waste has been recycled and no longer exists. No testing will be performed on any debris handled under this method.

Collect, test, classify, and filter decontamination water on site to remove particulates in accordance with local, state, and federal regulations, and the Project Engineer.

Contain, collect, test, classify, filter, and dispose of structural wash water in accordance with local, state, and federal regulations, and the Project Engineer.

Store other debris in separate leak proof containers. Debris that can easily

be classified by visual inspection as "Listed Hazardous Waste," such as mixed solid/liquid paint and paint related waste or other waste generated during the bridge painting operation, will be labeled as such and not be tested.

Debris that cannot be classified by visual inspection are to be sampled and tested to determine their classification and shall be properly disposed of based on that classification or as directed by the Project Engineer. Sample and test wastes in accordance with 40 CFR § Part 261, and LAC 33:V using the *Toxicity Characteristics Leaching Procedure (TCLP)*. The sampling and testing laboratory designated by the contractor and approved by the Project Engineer shall prepare a sampling plan in accordance with the *Environmental Protection Agency's Manual SW 846*. Submit the sampling plan to the Project Engineer as part of the Pollution Control and Monitoring Plan.

The Project Engineer will be present during the sampling of debris and will document that samples are representative of debris contained at the temporary storage site and that sampling conforms to the submitted sampling plan. Analyze samples in accordance with the best procedures and quality assurance requirements of 40 CFR § Part 268, and LAC 33:V.

811.09.7.2 Manifest: A manifest is required for the transportation of both hazardous and non-hazardous waste classified by either of the methods below. Return the manifest to the Project Engineer within 30 days of receipt from the treatment or disposal facility.

Upon completion of the project, the manifest will be transmitted to the Department's Materials Lab to the attention of the Environmental Compliance Unit by the Project Engineer and a copy retained and included in the final project record.

Wastes determined to be hazardous, either through process knowledge, testing, or otherwise, are subject to the provisions of RCRA and shall be completely manifested in accordance with 40 CFR § Part 262, and LAC 33:V when transported for treatment or disposal.

Wastes found to be non-hazardous by testing may be disposed of in a Subtitle D (non-hazardous) landfill. See LAC 33.VII *Solid Waste Regulations.*

The Department will be the generator of hazardous waste generated by the cleaning and painting operations. As generator, the Department will execute and sign the disposal manifest documents and provide the generator number. The contractor will be considered the co-generator of the waste, will sign the manifest, and is responsible for the proper conduct of, arrangement for, and payment of cost for the proper storage, testing, handling, transportation, treatment, and disposal of the generated wastes.

811.10 FAILURE TO COMPLETE WORK ON TIME. Failure to complete work on time will be subject to the provisions of 108.08.

811.11 MEASUREMENT.

811.11.1 Cleaning and Painting: Cleaning and painting new steel or other new materials will not be measured for payment. Cleaning and painting existing materials will be measured per lump sum.

811.11.2 Galvanizing: Galvanizing will not be measured for payment.

811.11.3 Cleaning and Metallizing: Cleaning and metallizing new steel will not be measured for payment. Cleaning and metallizing existing steel will be measured per lump sum.

811.11.4 Navigation Clearance Gauge (Painted): Navigation Clearance Gauge (Painted) will be measured by each.

811.12 PAYMENT. Contract unit prices shall include all materials, labor, equipment, containment systems, tools, testing, collection and disposal of wastes, and incidentals necessary to complete the work.

811.12.1 Cleaning and Painting: Payment for cleaning and painting existing materials will be made at the contract unit price in accordance with the submitted and accepted progress phases and segments for payment as described in 811.05.13.

811.12.2 Cleaning and Metallizing: Payment for cleaning and metallizing existing steel will be made at the contract lump sum price in accordance with the submitted and accepted progress phases and segments for payment as described in 811.05.13.

811.12.3 Navigation Clearance Gauge (Painted): Payment for navigational clearance gauge (painted) will be made at the contract unit price per each.

Payment will be made under:

Item No.	Pay Item	Pay Unit
811-01	Cleaning and Painting	Lump Sum
811-02	Cleaning and Metallizing	Lump Sum
811-03	Navigation Clearance Gauge (Painted)	Each

Section 812
Treated Timber

812.01 DESCRIPTION. Furnish and install lumber, timber, and hardware. Treat all timber unless otherwise specified.

812.02 MATERIALS. Materials shall comply with the following subsections:

Castings	1013.05, 1013.06
Structural Timber and Lumber	1014.01
Timber Preservatives	1014.03
Treatment	1014.04
Connectors	1014.05
Hardware and Structural Shapes	1014.06
Roofing Pitch	1018.09

812.03 SPECIES OF WOOD.

812.03.1 Permanent Structures: Use Douglas Fir or Southern Yellow Pine for permanent structures unless otherwise specified in the plans. Similar components must be of the same species throughout each structure.

812.03.2 Temporary Structures: Temporary bridges shall conform to Section 817, "Temporary Works." All other temporary structures may be any satisfactory species and grade of timber.

812.04 STORAGE OF MATERIAL. Keep lumber and timber stored on the site in orderly stacks. Stack material on supports above ground to permit free circulation of air between tiers and courses. Store timber in a manner which will prevent changes in dimensions, twisting, warping, and splitting of members before assembly.

Provide protection from the weather by suitable covering.

812.05 TIMBER. When treated timber is damaged or cut, repair disturbed areas with timber preservatives conforming to 1014.03.

812.05.1 Workmanship: Drive nails and spikes with just sufficient force to set the heads flush with the surface of the wood. Deep hammer marks in wood surfaces shall be considered evidence of poor workmanship and cause for rejection.

812.05.2 Surfacing: Lumber and timber, except bulkhead planks and sway bracing, shall be S4S (Surfaced Four Sides).

812.05.3 Handling: Handle treated timber with rope slings, without dropping or breaking of outer fibers, bruising, or penetrating the surface with tools.

812.05.4 Framing and Boring: Cut, frame, and bore treated timber before treatment insofar as practical. When treated timber is to be placed in

water infested by marine borers; avoid untreated cuts, borings, or other joint framings below high water elevation.

812.05.5 Installation of Timber Connectors: Install the split ring and the shear plate in precut grooves of dimensions as specified or as recommended by the manufacturer. Force the toothed ring and the spike grid into contact surfaces of the timbers joined by means of pressure equipment. Embed connectors of this type at a joint simultaneously and uniformly.

812.05.6 Cuts and Abrasions: After carefully trimming, cover cuts and abrasions in treated piles or timbers, with two applications of preservative and cover with hot roofing pitch.

Repair cuts and abrasions in timber treated with other preservatives with the same preservative.

812.05.7 Bolt Holes: Treat holes bored in pressure-treated material with preservative. Treat unused bore holes and spike holes with preservatives and plug with tight-fitting treated plug.

812.05.8 Temporary Attachment: Fill holes from temporary attachments with galvanized nails or spikes, or plug as required for bolt holes.

812.06 TREATMENT OF PILE HEADS.

812.06.1 General: After cutting, treat pile heads to prevent decay. Pile heads to be encased in concrete will not require treatment.

Immediately after making final cut-off on treated timber foundation piles, give the cut area two liberal applications of preservative followed by a heavy application of hot roofing pitch acceptable to the engineer, or other approved sealer. Protect heads of treated timber piles in bents or where the cut-off is exposed as follows.

Thoroughly brush coat the sawed surface with two applications of preservative, then place two layers of heavy canvas, size 20 inch x 20 inch, saturated with hot roofing pitch, followed by a 24 inch x 24 inch, 28 gauge galvanized metal cover. Bend the cover down over the pile approximately 45 degrees.

812.07 HOLES FOR BOLTS, DOWELS, RODS AND LAG SCREWS.

Bore holes for drift bolts and dowels perpendicular to the face of the timber 1/16 inch less in diameter than bolt or dowel. For square drift bolts or dowels, the diameter of the bored hole shall be equal to the least dimension of the bolt or dowel.

Bore holes for machine bolts the same diameter as the bolt.

Bore holes for rods 1/16 inch greater in diameter than the rod.

Bore holes for lag screws not larger than the body of the screw at the base of the thread.

812.08 BOLTS AND WASHERS. Use a washer of the size and type specified under bolt heads and nuts which would otherwise come in contact with wood. Stacked washers will not be permitted. Bolts shall not project more than 1 inch beyond the nut on work securely tightened. Saw cut long bolts or clip, grind smooth, and repair as specified in 811.08.

Nuts of bolts shall be locked after they have been tightened. Tack welding will not be allowed.

812.09 COUNTERSINKING. Countersink when required to prevent fasteners from protruding beyond the face of the timbers.

Paint horizontal recesses formed for countersinking with a preservative prior to hardware installation. After hardware is in place, fill with hot roofing pitch.

812.10 FRAMING. Accurately cut and frame lumber and timber to a close fit so that joints will have even bearing over the contact surfaces. No shimming will be permitted in making joints nor will open joints be accepted. Tightly bind or clamp mating pieces in position prior to drilling bolt holes.

812.11 PILE BENTS. Drive piles in accordance with Section 804.

812.12 CAPS. Place timber caps in a manner to secure uniform bearing over tops of supporting posts or piles. Secure caps by drift-bolts of at least 3/4 inch diameter extending at least 9 inches into posts or piles. Place drift-bolts approximately in center of the post or pile.

812.13 BRACING. Bolt ends of bracing through pile, post, or cap with a bolt of at least 5/8 inch diameter. Intermediate intersections of bracing shall be connected with wire or bolts.

812.14 STRINGERS. Size stringers at bearings and position stringers so that knots near edges will be near the top. Outside stringers may have butt joints with ends cut on a taper, but lap interior stringers to take bearing over the full width of floor beam or cap at each end. When stringers are two panels in length, stagger the joints. Neatly and accurately frame cross-bridging between stringers and securely toe-nail with at least two nails in each end.

Provide cross-bridging members with full bearing at each end against sides of stringers. Place cross-bridging at the center of each span.

812.15 PLANK FLOORS. Single plank floors consist of a single thickness of plank supported by stringers or joists. Lay planks heart side down, with 1/4 inch openings between them for seasoned material and with tight joints for unseasoned material. Securely spike each plank to each joist. Grade planks as to thickness and lay so that no two adjacent planks vary in thickness by more than 1/16 inch.

Two-ply timber floors consist of two layers of flooring supported on stringers or joists. Pressure treat the lower course with a preservative. Lay the top course either diagonal or parallel to the centerline of roadway, as specified, and securely fasten each floor piece to the lower course. Stagger joints at least 3 feet. If placing the top course parallel to the roadway centerline, take care to securely fasten ends of flooring. At each end of the bridge, bevel these members.

812.16 LAMINATED OR STRIP FLOORS. Place strips on edge at right angles to the roadway centerline. Spike each strip to the preceding strip at each end at approximately 18-inch intervals. Drive the spikes alternately near the top and bottom edges. Spikes shall be of sufficient length to pass through two strips and at least halfway through the third strip.

If using timber supports, toe-nail every other strip to every other support. When specified, securely attach strips to steel supports with approved galvanized metal clips. Take care to have each strip vertical and tight against the preceding one and bearing evenly on supports.

812.17 WHEEL GUARDS AND RAILING. Frame wheel guards and railing in accordance with the plans and erect true to line and grade. Lay wheel guards in sections at least 12 feet long.

812.18 PAINTING AND PROTECTIVE COVERINGS. Paint parts of structures as specified. Paint metal parts not galvanized in accordance with Section 811.

When timber decks are provided, protect top flanges of stringers and floor beams by a covering composed of a heavy layer of hot roofing pitch and one thickness of two-ply tar paper wide enough to project 3 inches beyond edges of members. Bend these edges down approximately 45 degrees.

812.19 MEASUREMENT. Quantities will be the design quantities measured by the number of thousand board feet, (MBFM). Hardware will not be measured for payment, unless specified on the plans as Structural Metalwork and a contract pay item provided.

812.20 PAYMENT. Payment for timber will be made at the contract unit price per thousand board feet.

Payment will be made under:

Item No.	Pay Item	Pay Unit
812-01	Treated Timber (Type)	MFBM

Section 813
Concrete Approach Slabs

813.01 DESCRIPTION. Furnish and construct concrete approach slabs of the type and dimensions at locations specified.

813.02 MATERIALS. Materials shall comply with the following sections and subsections:

Plastic Soil Blanket	203.10
Portland Cement Concrete	901
Bedding Material	1003.10
Joint Materials	1005
Thermoplastic Pipe	1006
Deformed Reinforcing Steel	1009.01
Timber Piling	1014
Hardware Cloth	1018.05
Geotextile Fabric	1019.01

Bedding material shall be either stone in accordance with 1003.03.1 or recycled portland cement concrete in accordance with 1003.03.2.

Polyethylene sheeting shall comply with AASHTO M171.

Geotextile fabric shall comply with Section 1019, Classes B, C, or D. The fabric shall be resistant to chemical, biological, and insect attack.

813.03 CONSTRUCTION REQUIREMENTS.

813.03.1 Embankment: Construct the headers to full embankment height as defined by the grading section elevations shown on the plans as early in construction as possible to aid settlement. If shown on the plans, construct wick drains and/or surcharge to the designated fill heights and allow to remain in place for the indicated duration. Perform structural excavation for end bent construction prior to driving piles.

Place geotextile fabric as a separation layer between the embankment and the bedding material beneath the approach slab in accordance with 203.11. Do not allow any equipment on the fabric unless there is at least 6 inches of cover.

When specified, place the approach slab on a layer of allowable bedding material in accordance with plan details. Place bedding material and compact

as directed. Cover with approved polyethylene sheeting of at least 6-mil nominal thickness.

813.03.2 Drainage Systems: Construct underdrain systems in accordance with the plans and Section 703.

813.03.3 Reinforcing Steel: Fabricate and place deformed reinforcing steel to comply with Section 806.

813.03.4 Support Piles: When shown in the plans, support the approach slab on piles in accordance with Section 804.

813.03.5 Concrete: Use Class A1 concrete for all approach slabs and bolster blocks under approach slabs in accordance with Section 805.

Use Class M concrete for headwalls for under drain system in accordance with plan details.

Cure approach slabs in the same manner as bridge decks in conformance with 805.06. Do not use membrane cure on approach slabs requiring asphalt overlay.

Surface tolerances shall conform to 805.03.4.

813.03.5.1 High Early Strength Concrete: When specified or when construction conditions merit opening up concrete approach slabs to traffic early before concrete is fully cured, the following requirements will apply for high early strength (HES) concrete.

Submit to the Project Engineer for review the HES concrete mix design. Verify by trial batch that the proposed HES concrete mix achieves a minimum compressive strength of 3000 psi within 4 hours and achieves a 28-day minimum compressive strength of 4500 psi as per Table 901-3. Mold and cure compressive strength specimens in accordance with DOTD TR 226 and test in accordance with DOTD TR 230. Submit results of trial batch testing to Project Engineer for acceptance before use on bridge approach slab.

Use a modified Class A1 concrete mix design for the HES concrete and conform to the following requirements:

1. Follow manufacturer/supplier's recommendations on mixing and placing high early strength concrete.
2. Do not use chloride-type accelerating admixtures.
3. Place the concrete continuously to prevent cold joints.
4. Promptly finish the concrete as specified in 813.03.6.
5. Immediately after finishing, apply curing compound at double the normal specified quantities.
6. Permit no traffic on the HES concrete approach slab until it obtains a minimum compressive strength of 3,000 psi.

Use curing boxes for the molded cylinders to emulate the strength gain of the in-place concrete. Submit to the Materials Engineer Administrator for review the maturity method for strength determination.

At the contractor's option, Type B or Type D concrete may be substituted in place of Class A1 concrete provided the mix achieves a 28-day minimum compressive strength of 4500 psi and meets the other requirements of this section.

813.03.6 Roadway Finish: Give the roadway a metal tine texture finish.

Surface finishes shall conform to 805.08. Finish approach slabs requiring asphalt overlay in accordance with 805.08.5 without tine finish.

813.04 MEASUREMENT. Quantities of concrete approach slab will be measured by the square foot of horizontal surface area measured to the outer perimeter. Required concrete, concrete closure placements, reinforcing steel, joint materials, bedding materials, surcharge material, geotextile fabric, polyethylene sheeting, underdrain pipe and system, rodent screen, and head walls will not be measured for payment. Asphalt overlay, when required, will be paid for under a separate item.

813.05 PAYMENT. Payment for concrete approach slabs will be made at the contract unit price which includes all materials, labor, equipment and tools necessary to complete the work and shall be subject to the following provisions.

Acceptance and payment for concrete approach slabs will be made on a lot basis. A lot will be considered as a complete approach slab or an identifiable placement that is completed in one day. Two random batches will be sampled for each lot, and three cylinders molded for each batch. The six cylinders per lot will be tested for compressive strength in 28 to 31 days. In the event of sudden cessation of operations, a minimum of three cylinders will constitute a lot. Acceptance and payment for each lot will be made in accordance with tables 901-4 and 901-6.

Payment will be made under:

Item No.	Pay Item	Pay Unit
813-01	Concrete Approach Slabs (Cast in Place)	Square Foot
813-02	HES Concrete Approach Slabs (Cast-in-Place)	Square Foot
813-03	Concrete Approach Slabs (Precast)	Square Foot
813-04	Concrete Approach Slabs (Pile Supported)	Square Foot

Section 814
Bearings

814.01 DESCRIPTION. Furnish and construct bearings of the type and dimensions at the specified locations. When existing bearings are replaced, prepare existing areas for installation of new bearings.

814.02 MATERIALS. Comply with the following sections and subsections.

Metals	807, 1013
Welding	809
Portland Cement Concrete	901
Elastomeric Bridge Bearing Pads	1018.14
Grout	1018.04

Stainless steel components shall conform to ASTM A240 / A240M – Type 304. All other steel components shall comply with AASHTO M270, Grade 50.

814.03 SUBMITTALS. Submit bearing Design, Fabrication and Installation Plan to the Bridge Engineer for review in accordance with Section 801. Do not begin work until submittal acceptance.

Include the following as a minimum:

1. State Project Number, project name, route, and parish.
2. Names of fabricator, manufacturer, and manufacturer's representative.
3. Description of work, and any other information requested by the engineer.
4. Material requirements.
5. When bearing requires design by the contractor, provide documentation verifying the contractor or subcontractor has the required design, fabrication and installation experience. The required experience consists of having designed and fabricated similar bearings for a minimum of five years, and having performed at least ten bearing installations similar to the specified bearing. The design of the bearing assembly shall be in accordance with the latest edition of the *AASHTO LRFD Bridge Design Specifications* and shall be stamped, signed and dated by a Professional Engineer registered in Louisiana.

6. When bearings contain steel fabrication, other than steel shims for laminated neoprene pads, provide fabricator's certification by the American Institute of Steel Construction (AISC) for Simple Steel Bridges.

7. Testing plan and acceptance criteria.

8. Identify protective coatings and application procedures.

9. Reviewed and accepted shop drawings, showing bearing identification markings.

10. Handling, transportation, storage and installation procedures.

814.04 CONSTRUCTION REQUIREMENTS. Construct in accordance with the latest edition of the *AASHTO LRFD Bridge Construction Specifications*.

Paint steel bearing assembly components exposed to weather, except stainless steel components and bearing surfaces, with a zinc paint system in accordance with Section 811.

Construct anchor bolts in accordance with 807.06.3.

Clean and finish or machine bearing installation surfaces and provide uniform bearing support. Set bearing to the specified position, grade and elevation.

Bearings or masonry plates which rest on steel supports may be directly installed on the supports provided the support is flat within a tolerance of 0.002 times the nominal dimension.

814.04.1 Bearing Types:

814.04.1.1 Elastomeric Bearing Pads: Conform to 1018.14. Set elastomeric bearing pads directly on concrete masonry.

Place girders when the ambient temperature average of 6 readings is not less than 50°F and not greater than 85°F. When girders are placed at temperatures outside of this range, lift girders or span to reset bearing positions within the specified temperature range. Resetting bearings will be at no additional cost or time to the Department.

814.04.1.2 Contractor Designed Bearing Assembly: Contractor designed bearings may consist of disc bearings, pot bearings, or other types of bearings as specified on the plans.

Perform long-term deterioration testing on a per lot basis. Pre-qualification is not allowed. Perform all testing on full complete bearing assemblies unless otherwise stated in the plans. The engineer will select the bearing assemblies from each lot to be tested. Acceptance of the bearings will be based on the limits, tolerances, and testing as stated in the latest edition of the *AASHTO LRFD Bridge Construction Specifications*.

Conform to Sections 807, 809, and 1013. Provide bearing designs and construction in accordance with the requirements of the contract.

814.04.1.3 PTFE Sliding Plate Bearing Assembly: When polytetrafluorethylene (PTFE) sliding plate bearings are specified on the plans, comply with the following requirements.

Use companies and shops normally engaged in production of bridge bearings similar to the types specified on the plans to fabricate sliding plate bearings.

Comply with Section 814 as amended herein.

Provide stainless steel sliding surfaces operating against a bearing surface of PTFE. Bearings shall be structurally equal to or greater than those shown on the plans and shall be designed to accommodate required movements and reactions. Polish stainless steel in contact with the PTFE sheet to a bright mirror finish, less than 20 micro-inches root mean square. Attach stainless steel to the structural steel substrate with a continuous seal weld in accordance with the applicable requirements of the latest edition of American Welding Society (AWS).

Machine all bearing surfaces of steel plates flat to within 0.010 inches per foot. Out-of-flatness greater than 0.010 inches per foot on any plate shall be cause for rejection. Gross dimensions shall have a tolerance of -0 inch, +1/8 inch. Each bearing assembly shall have the project identification number, lot number, and individual bearing number indelibly marked with ink on the side that will be visible after erection.

Visually examine each bearing assembly during and after testing. Any resultant defect, such as bond failure, physical destruction, or cold flow of PTFE to the point of debonding, extruded or deformed elastomer, or cracked steel, shall be cause for rejection.

Bearing assembly delivered to the construction site shall be stored under cover on a platform above the ground surface. Bearing assembly shall be protected at all times from damage. When erected, the bearing assemblies shall be dry, clean, and free from dirt, oil, grease, or other foreign substances. Bearing assembly shall not be disassembled unless otherwise permitted by the manufacturer or Engineer of Record.

Clean the bearing area of any residue deposited from the existing bearing or any other materials that would adversely affect the performance of the new bearing assembly. Set the bearing assembly as shown in the plans. Upon final installation of the bearing assembly, the Project Engineer, in the presence of the manufacturer's representative if required, will inspect the bearing

components to assure that they are level and parallel to within +0.005 radians. Correct deviations not conforming to the specified tolerances.

814.04.1.3.1 Construction Methods: After fabrication before bonding, plane stainless steel or PTFE back-up material to a true plane. Bonding of PTFE sheets shall be performed by the bearing manufacturer under controlled conditions and in accordance with written instructions of the adhesive system manufacturer. Side of PTFE sheet to be bonded to metal shall be factory treated by an approved manufacturer by the sodium naphthalene or sodium ammonia process.

After bonding operations, the PTFE surface shall be smooth, flat and free from bubbles. Filled PTFE surfaces shall then be polished. Fabric shall be capable of carrying unit loads of 10 ksi without cold flow. Bond or mechanically attach PTFE fabric to a rigid substrate.

The fabric-substrate bond shall be capable of withstanding a shear force equal to 10 percent of the perpendicular application loading without delaminating in addition to the shear force developed as a result of the natural bearing friction shear force. The test method shall comply with ASTM D1002.

Welding to steel plate which has a bonded PTFE surface will be permitted providing a welding procedure is established and accepted, which restricts temperature reached by the bond area to less than 300°F as determined by temperature indicating wax pencils, or other suitable means.

The clad plate shall comply with ASTM A264. In lieu of clad plate, the stainless steel plate may be continuously Tungsten Inert Gas Fillet Welded to the sole plate.

The back-up plate for the PTFE surface shall be factory vulcanized to the lower neoprene bearing element.

Where unfilled PTFE sheet is used, recess PTFE in backup plate by one-half of the PTFE sheet thickness.

Assemble bearings at the plant, mark for identification and deliver as a complete unit. Bearings shall have permanent match marks to indicate the normal position of the bearing. During transportation and storage, cover bearings with moisture proof and dust proof covers, and protect against damage.

Furnish manufacturer's certification of steel, elastomeric pads, PTFE and other materials used in fabrication of bearings.

814.04.1.3.2 Fabrication Inspection: Fabrication will be inspected by the Construction Section in accordance with Section 807 and the following.

Tests for coefficient of friction shall be performed by the manufacturer or in an approved laboratory. Test one completed bearing from each group. Test methods and equipment shall be approved and shall include, but not be limited to, the following:

Arrange tests so that the coefficient of friction at first movement of bearing can be determined.

Clean bearing surfaces prior to testing and a silicone gel may be added to the surfaces. When silicone gel is used between the bearing surfaces during the test, apply silicone gel to each bearing either before assembly at the fabrication plant or before erection in the field.

Conduct tests at maximum working stress for the PTFE working surface with test load supplied continuously for 12 hours prior to measuring friction.

Determine first movement static and dynamic coefficients of friction of test bearings at a sliding speed of less than 1 inch per minute and not exceeding 75 percent of the coefficient of friction specified in Table 814-1.

Table 814-1
Coefficient of Friction of Bearing

	Bearing Pressure[1]		
	500 psi	2000 psi	3500 psi
	Coefficient of Friction		
Unfilled PTFE, Fabric containing PTFE fibers, and PTFE Perforated Metal			
Composite	0.08	0.06	0.04
Filled PTFE	0.12	0.10	0.08

[1] The actual bearing pressure shall be provided to the fabricator upon request.

Subject bearing specimens to 100 movements of at least 1 inch of relative movement and if the test facility permits, full design movement at a speed of less than 1 foot per minute. Following this test, determine static and dynamic coefficients of friction again and do not exceed values measured in part 4 above. Bearing specimen shall show no appreciable sign of bond failure or other defects.

Bearings represented by test specimens passing above requirements will be accepted subject to onsite inspection for visible defects.

814.04.1.4 Cast Iron or Steel or Rolled Steel Bearings: Conform to Sections 807, 809, and 1013. Set cast iron or steel or rolled steel bearings on the masonry with a preformed fabric bearing pad.

814.05 MEASUREMENT. Elastomeric bearing pads will be measured by the square foot-inch. Bearing assemblies will be measured per each. Measurement for elastomeric bearing pads and bearing assemblies will include all materials between the bottom of the girder flange or sole plate and the substructure bearing installation surface, as specified in the plans.

Resetting bearings to specified temperature range will not be measured for payment.

814.06 PAYMENT. Payment for bearings will include all material, labor, equipment, tools, testing, and incidentals necessary to complete the work.

Payment will be at the contract unit price under:

Item No.	Pay Item	Pay Unit
814-01	Elastomeric Bearing Pads (Non-Reinforced)	Square Foot-Inch
814-02	Elastomeric Bearing Pads (Reinforced)	Square Foot-Inch
814-03	Bearing Assembly (Type)	Each

Section 815
Joints

815.01 DESCRIPTION. Furnish and construct joints of the type, dimensions, and at the locations specified. Joints are composed of metalwork plates, metalwork extrusions, or concrete nosing on both sides of the joint opening. Joints may contain a seal to prevent water and debris from passing through the joint opening.

When existing joints are to be replaced, prepare the existing area for installation of new joints.

815.02 MATERIALS

Comply with the following:

Metals	807, 1013
Welding	809
Portland Cement Concrete	901
Joint Fillers	1005.01
Joint Seals	1005

Unless otherwise specified, steel used in joint system fabrication, including barrier armoring, shall be AASHTO M270 Grade 50, and shall be hot dip galvanized after fabrication in accordance with Section 811. Use A325 high strength fastener assemblies in the sizes and lengths specified and in accordance with Section 807. Type 1 bolts, nuts, washers, and DTIs shall be mechanically galvanized in accordance with 811.08.

815.03 SUBMITTALS. When specified, submit a Joint Design, Fabrication Plan, and Installation Plan to the Bridge Engineer for review in accordance with Section 801. Do not begin work until submittal acceptance. Acceptance by the engineer will be subject to field performance and will not relieve the contractor of the responsibility to satisfactorily complete the work.

Include the following as a minimum:

1. State Project Number, Project name, route, and parish.
2. Names of fabricator and manufacturer's representative.
3. Material requirements.
4. When joint requires design by the contractor, provide documentation verifying the contractor or subcontractor has the required design, fabrication and installation experience. The required experience consists of having

designed and fabricated similar bridge joints for a minimum of five years, and having performed at least ten bridge joint installations similar to the joint specified. The design of the joint assembly shall be in accordance with the *AASHTO LRFD Bridge Design Specifications* and shall be stamped, signed and dated by a professional engineer registered in Louisiana.

5. When joints contain steel fabrication, provide fabricator's certification by the American Institute of Steel Construction (AISC) for Simple Steel Bridges.

6. Testing plan and acceptance criteria.

7. Identify protective coatings and application procedures.

8. Reviewed and accepted shop drawings, showing joint identification markings.

9. Installation Procedures.

The installation procedures included with the submittal shall be in accordance with the recommendations of the joint manufacturer, and shall include at a minimum:

a. Means of delivery, handling, lifting, and storing.

b. Step-by-step installation procedures.

c. Temperature setting and adjusting values.

d. Methods for securing joint temporarily during adjustment.

e. Methods for adjusting joint for temperature considerations.

f. Methods for insuring rideability.

g. Methods for installing and securing the joint, blockout reinforcing and post-tensioning, and for placing surrounding concrete to the lines required.

h. Methods for adjusting barrier shape and attaching barrier rail inserts, bolts, and sliding cover plate assemblies.

815.04 CONSTRUCTION REQUIREMENTS.

815.04.1 Joint Systems: Conform to Section 809 for welding. Field welding is not permitted.

The joint system shall accommodate the longitudinal movements shown on the plans while maintaining a smooth riding surface conforming to the profile grade of the bridge deck, with minimal space between fingers, plates, extrusions or concrete nosings. A smooth riding surface is defined as no more than 1/8 inch deviation of plates and finished concrete surface from a 10.0 feet straight edge placed anywhere across the joint.

When specified, the joint system shall prevent the passage of water, debris, and other deleterious substances through the deck joint.

Submit shop drawings to the Bridge Engineer for review in accordance with Section 801. On the shop drawings, show details of the joint, seal, trough, barrier armoring, plates, fastener assemblies, setting/installation tables and procedures, and all other elements of the work in accordance with the contract.

Store joint material under cover on platforms above ground, and protect at all times from damage.

815.04.1.1 Unsealed Expansion Joint: Fabricate and install joint as shown on the plans and specifications. Install joint in accordance with 815.04.2.

815.04.1.2 Sealed Expansion Joint: Fabricate and install joint as shown on the plans and specifications. Install joint in accordance with 815.04.2. Install joint seal in accordance with 815.04.3.

815.04.1.3 Sealed Expansion Joint (Modular): Fabricate and install joint as shown on the plans and specifications. Install joint in accordance with 815.04.2. Install joint seal in accordance with 815.04.3.

815.04.1.4 Expansion Joint (Finger): Fabricate and install joint as shown on the plans and specifications. Install joint in accordance with 815.04.2. Install joint trough in accordance with 815.04.3.

Provide steel finger plates, elastomeric drainage troughs, barrier sliding plate or armor assemblies, fastener assemblies, shapes, studs, anchors or fixing devices, and all other required components of the expansion joint system required to complete the work in accordance with the details and requirements of the plans and specifications.

Alternate designs shall be in accordance with *AASHTO LRFD Bridge Design Specifications*, including all fatigue requirements. Provide all features of the joint system as shown on the plans. This includes removable and replaceable plates, troughs, and parts (short, manageable sections), watertight drainage troughs, pre-tensioned anchor bolts, and other elements. Steel finger plates and armor plates shall sustain all loads and impacts without damage or fatigue of the joint or structure to which it is secured. If an alternate design is submitted by the contractor, the contractor shall be responsible for all costs associated with the review by the Department and/or the Department's consultant.

Maximum and minimum joint openings and finger plate requirements shall be as shown on the plans. Align fingers (teeth) parallel to the direction of movement and provide the minimum and maximum spacing required. Install the finger joint surface to provide a smooth riding surface that conforms to the profile grade.

Shape and install the fingers of the joint as shown on the plans to ensure that the fingers remain below the level of the riding surface at all times under all anticipated movements and rotations of the superstructure and substructure.

Design, fabricate, and install drainage troughs in accordance with the plans such that a minimum true slope of 8 percent is maintained across the structure with due consideration for superelevation at the joint location. Provide a minimum sag of 6 inches measured from the trough attachment points at the maximum joint opening at the centerline of the girder. Trough and sheet limits shall be as shown on the plans.

815.04.2 Joint Installation: Exercise care during installation to avoid damage to components of the joint system. All damaged plates, fingers, shapes, fastener assemblies, troughs, seals, membranes, or other elements of the work shall be removed and repaired or replaced with new components in a manner acceptable to the engineer and at no cost or time to the Department.

Deck surface preparation, including grinding and/or grooving required to meet surface smoothness and finish specifications, shall occur before installation of the joints. To allow movement of construction personnel, temporarily bridge joints using suitable materials and means that prevent damage to the structure until joints can be installed. Do not install joint until the Joint Installation Plan is accepted.

Employ positive methods to keep joints straight, true and in correct position during concrete placement. Adjust the open space of the expansion joints to accommodate the difference between the designated plan temperature and installation temperature. Remove temporary restraints placed in joints as soon as possible after placing concrete adjacent to the joint.

Do not extend reinforcement across the joint. Maintain proper cover on reinforcing steel at joint openings.

Installed joint shall be free of dirt, oil, grease, or other foreign substances.

Accurately locate and securely hold anchor bolts, armor plates, and fixing devices to correct line and level during placement of secondary concrete to fill the blockout region when required. Concrete shall be placed, properly consolidated with no voids, finished, and cured to ensure proper strength and durability.

When specified on the plans, provide a formed surface to contain the secondary concrete placement at the front edges of the opening underneath both sides of the joint. Secondary concrete for filling blockouts shall be the same class and strength as that specified for the bridge deck, unless otherwise specified. The contractor may propose a mix design utilizing a maximum coarse aggregate size of 3/8 inch provided the proposed mix meets the same

strength, permeability and durability specified for the bridge deck. Submit mix design to the Bridge Engineer for review.

Prior to final acceptance, remove all materials used to form the secondary placement of the expansion device blockout and to temporarily support the expansion device until concrete set.

815.04.3 Joint Seals: Install materials as shown on the plans and in accordance with the manufacturer's recommendations.

Seal joints full width, including curbs and sidewalks. The concrete shall be at least seven days old prior to sealing. Use similar sealants for the same type of joints within the entire structure.

815.04.3.1 Poured Seals: Before application of the sealant, clean and sandblast joint faces. Thoroughly dry joints at the time of installation. Install backer material and sealants in accordance with the manufacturer's recommendations.

Apply primers as directed by the manufacturer and the same day as sealant installation.

Use the appropriate backer material for the sealant system being applied.

Hot poured rubberized asphaltic type is not allowed for bridge deck joints.

815.04.3.2 Preformed Neoprene Sealing Systems: Apply the adhesive lubricant just prior to installation of the gland. Use an amount of lubricant sufficient to completely cover the contact surfaces of the steel extrusion and the seal glands. Install in a manner that least disturbs the adhesive lubricant. Do not dilute the adhesive lubricant.

815.04.3.3 Preformed Silicone Sealing Systems: Concrete or steel surfaces to which the seal is to be adhered shall be clean, dry, and free of all loose concrete or material that would adversely affect seal adhesion prior to application of the adhesive. For high early strength concrete joint repairs, shorter installation times may be allowed pending review and approval by both the joint seal and concrete manufacturers. Remove bond breaker residue to the satisfaction of the engineer. Size the joint seal dimensions in accordance with the plans. Materials used for forming new concrete joints where the seal is to be adhered shall be applied in accordance with the seal manufacturer's recommendations. Apply the adhesive in accordance with the manufacturer's recommendations. Follow the manufacturer's instructions and recommendations for handling and installing joint seal.

Rips, tears, or bond failure will be cause for rejection.

815.04.3.4 Fabricated Troughs and Membranes: Fabricate troughs and membranes as a single piece without splices. Construct watertight connections. Cut all material cleanly, with a true edge using suitable sharp

tools and methods to provide a straight and accurate installation. Conform to manufacturer's recommendations.

When drainage troughs are required, fabricate and install elastomeric drainage troughs, sheets, seals, or other membranes to collect all water, moisture, debris, and other deleterious substances from the roadway passing through the openings between fingers. Attach and seal troughs, sheets, seals, and membranes to the joint assembly so that no leakage occurs and adjacent parts of the structure remain protected during normal operation and flushing of the joints by maintenance personnel.

815.05 MEASUREMENT. Measurement of joints and seals will be per linear foot. Measurement will be the length parallel to the joint between curb lines. Components and work extending into curbs and barriers will not be measured for payment.

815.06 PAYMENT. Payment for joints and seals will be made at the contract unit price which includes design, submittals, materials, fabrication, testing, certification, transport, delivery, storage, handling, labor, equipment, tools, and incidentals necessary to complete the work.

Payment will be at the contract unit price under:

Item No.	Pay Item	Pay Unit
815-01	Unsealed Expansion Joint (Type)	Linear Foot
815-02	Sealed Expansion Joint (Type)	Linear Foot
815-03	Joint Seal (Type)	Linear Foot

Section 816
Bridge Drainage Systems

816.01 DESCRIPTION. Furnish and construct specified bridge deck drainage system.

816.02 MATERIALS. Materials shall comply with the plans and specifications and the following:

Culverts and Storm Drains	701.02
Manholes, Junction Boxes, Catch Basins, and	702.02
End Treatments	726.02
Bedding Material	805.02
Structural Concrete	806.02
Deformed Reinforcing Steel	807.02
Structural Metals	
Painting and Protective Coatings	811
Metals	1013
Stainless Steel Bolts	1013.08

Pipe hangers, scuppers and drain grates shall be steel conforming to ASTM A709, Grade 36, galvanized after fabrication in accordance with section 811.

Bolts, nuts, and washers connecting drain grates and scuppers shall be stainless steel AISI Type 416. All other bolts, nuts, washers and screws shall conform to ASTM A 307, galvanized in accordance with ASTM A 153/A 153 M or by an approved mechanical galvanizing process conforming to ASTM B 695 that provides the same coating thickness.

Piping and fittings shall be one of the following systems, at the contractor's option:

1. Aboveground piping shall be standard weight, schedule 40, galvanized steel pipe conforming to ASTM A 53/A 53 M, and underground piping shall be cast iron pipe conforming to ASTM A 74; or,

2. All piping (both underground and above ground) shall be standard weight, schedule 40, galvanized, nickel-copper alloy steel pipe conforming to ASTM A 53/A 53 M, except the chemical composition shall include copper content from 0.75 to 1.25 percent by weight and nickel content from 1.60 to 2.20 percent by weight.

When materials other than steel are specified, provide materials according to the plans.

816.03 CONSTRUCTION REQUIREMENTS.

816.03.1 Submittals: Submit fabrication details to the Bridge Engineer for review in accordance with Section 801. Do not order materials or begin work until submittal acceptance. Acceptance by the engineer will be subject to field performance and will not relieve the contractor of the responsibility to satisfactorily complete the work.

As a minimum include the fabrication details, material and coating requirements, proposed piping layout, fittings and slopes, grating details, and anchor and hanger details.

816.03.2 Bridge Deck Drainage System: Fabricate in accordance with the plans and specifications. Deviations will not be permitted without approval of the Bridge Engineer.

Provide the DOTD Fabrication Engineer at least 30 calendar day advance written notice of the beginning of work at the mill or shop so that inspection may be provided. No material shall be manufactured or work done in the shop before the DOTD Fabrication Engineer has been notified.

Furnish facilities for inspection of materials and workmanship in the mill and shop as described in Section 807.

Ends of pipe shall be smooth at welded joints; otherwise, pipe ends shall be grooved to facilitate mechanical type couplings. Pipe couplings shall be mechanical type, to mechanically engage and lock the groove pipe or fitting ends in a positive couple to allow for angular deflection and contraction and expansion. Each coupling shall consist of malleable iron housing clamps in two or more parts, a sealing gasket, and two or more steel bolts as required to assemble the housing clamps. Couplings shall be Victaulic Standard Couplings, Type 77, or Gustin Bacon No. 100 or other approved equal couplings.

Exposed metalwork not galvanized shall be painted in accordance with Section 811. Damaged galvanizing shall be repaired in accordance with Section 811.

816.03.3 Bridge End Drain System: Construct bridge end drain system in accordance with the plans. Comply with Section 701 for the placement of pipe. Comply with Section 702 for construction of the catch basin. Comply with Section 726 and 1003.10 for bedding material requirements.

816.04 MEASUREMENT.

816.04.1 Bridge Deck Drainage System: Bridge deck drainage systems will be measured per lump sum. Any estimated quantities shown in the plans are approximate and no guarantee is made that those are the correct quantities to be furnished. No adjustments in contract price will be made due to errors in the estimated quantities shown on the plans. Shop bills will not be required.

816.04.2 Bridge End Drain System: Bridge end drain system will be measured per each. Measurement for bridge end drain system will include all materials specified in the plans for the installation of the bridge end drain system.

816.05 PAYMENT. Payment for bridge deck drainage system and bridge end drain system will include all materials, labor, equipment, tools, testing and incidentals necessary to complete the work.

Payment will be made at the contract unit price under:

Item No.	Pay Item	Pay Unit
816-01	Bridge Deck Drainage System (Type)	Lump Sum
816-02	Bridge End Drain System (Type)	Each

Section 817
Temporary Works

817.01 DESCRIPTION. Furnish, construct, and remove temporary facilities employed in the execution of the work. Such facilities include but are not limited to temporary bridges, temporary sheeting, falsework, shoring, formwork, scaffolding, form travelers, cofferdams, water control systems, and containment systems.

817.02 MATERIALS.

Sheeting	802
Drilled Shafts	803
Piles	804
Concrete	805
Reinforcing Steel	806
Steel	807
Granular Material	1003.09
Fence and Guard Rail	1010
Timber	1014.01

817.03 CONSTRUCTION REQUIREMENTS. Design temporary works in accordance with the latest version of *AASHTO LRFD Bridge Construction Specifications*. Consider appropriately distributed construction loads such as stockpiled materials and construction equipment. Determine member capacities based on field conditions accounting for section loss, deterioration of capacity, alterations of the structure, and support conditions during all construction phases.

Conform to Section 801 for submittals.

817.03.1 Temporary Works Designed by Engineer of Record (EOR):

817.03.1.1 Temporary Detour Bridge: Submit for review shop drawings for fabricated elements. Submit installation, maintenance and removal plan for review.

Conform to Sections 803 for drilled shafts, 804 for piles and 704 for guardrails. Steel will not be required to be coated unless specified.

Construct temporary detour bridge as specified. Construct temporary detour road in accordance with Section 725.

Maintain the detour bridge in safe condition. If the contractor fails to maintain the detour bridge in a safe condition, the Department reserves the right to act in accordance with 105.16.

Remove the detour bridge in accordance with 202.03 when no longer required to carry traffic. Fill holes resulting from removal of bridge elements with a granular material. Temporary bridge materials shall remain the property of the contractor unless otherwise specified. Dispose of temporary bridge materials outside the right-of-way.

817.03.1.2 Temporary Sheeting: Submit for record material type and size, installation, and removal plan.

Install and remove temporary sheeting as specified in the plans and specifications in accordance with Section 802.

817.03.2 Temporary Works Designed by Contractor: Temporary works are considered to be the contractor's means and methods. Unless otherwise specified, submittals will be for record. Submit materials, drawings and construction details, and procedures for installation, operation, maintenance and removal. Submit supporting documentation such as engineering analysis and design and manufacturer's information for prefabricated elements. A professional engineer registered in Louisiana shall perform, seal, sign, and date all submitted analysis, related drawings, and design.

817.03.2.1 Construction Access Bridge: Provide a bridge for construction access within the limits of the specified right-of-way which meets the environmental commitments and hydraulic requirements at the site.

Perform all necessary additional clearing and grubbing as required to complete this item. Remove construction access bridge in accordance with 202.03. Fill holes resulting from removal of bridge elements with a granular material. All materials shall remain the property of the contractor and shall be removed beyond the limits of the right-of-way.

817.03.2.2 Contractor Sheeting: Install and remove contractor sheeting in accordance with Section 802 when no longer needed for construction, unless otherwise approved.

817.03.2.3 Falsework and Formwork:

Support falsework on a satisfactory foundation and remove upon completion of work. Falsework and formwork shall be set to give the finished structure the specified final position under all loads.

817.03.2.4 Cofferdams: General cofferdam requirements for bidding purposes may be included in the plans.

Design, fabricate, install, maintain, and remove the cofferdam system. The cofferdam system consists of temporary elements such as walls, supporting structural elements, and water control system. The cofferdam seal is part of the permanent structure designed by the EOR. The seal is designed to prevent water ingress and to provide vertical stability to the cofferdam system and foundation during all construction stages. Place the upper one foot of seal concrete in the dry to provide a level surface for forming and constructing the foundation footing.

The plan seal and foundation have been designed for vertical stability under the plan specified maximum allowable water surface elevation for dry foundation construction. Flood the cofferdam when the water elevation exceeds the specified maximum allowable water surface elevation. Flooding under this condition will be considered an excusable compensable delay in accordance with 108.07.4. Cofferdam flooding occurring at water elevations below the specified maximum allowable value will be considered a non-excusable delay in accordance with 108.07.5.

Alterations to the plan seal and foundation will require a Contractor or VE Proposal. Submit the proposal for review. The specified maximum water surface elevation will not be altered. Department cost to review, redesign and detail the seal and foundation will be reimbursed to the Department through Change Order regardless of whether or not the proposal is constructed.

Submit a Cofferdam Installation Plan to the Project Engineer for record. Include design assumptions, computations, details of cofferdam system elements, and sequences and methods of construction including excavation, installation of cofferdam system, and construction of seal and foundation, and cofferdam system removal. Include cofferdam system components to remain in the permanent work, repair methods and repair materials. The Cofferdam Installation Plan shall be designed, sealed, signed and dated by a professional engineer registered in Louisiana.

Design and construct cofferdam so that system and components safely perform under all aspects of global, external and structural stability during each stage of construction, including anchorage, embedment, and loads from balanced and unbalanced soil, water, and construction activities. Provide sufficient interior clearances for form construction, inspection of form exteriors, and to permit control of water.

Cofferdams that tilt or move laterally shall be righted, reset, and enlarged as needed to provide necessary interior clearances.

Control ingress of water so that construction can be performed in the dry. Dewater after seal concrete has cured. When weighted cofferdams are employed and the weight is utilized to participate in vertical stability of the system, provide anchorage to transfer cofferdam system weight to the seal. During placing and curing of seal, control the water elevation inside the cofferdam to prevent water flow through the seal.

If the cofferdam is permitted by the engineer or required by the plans to remain in place, vent or port cofferdam at or below low-water level.

Re-establish pre-construction ground elevations inside and outside of the cofferdam in accordance with Section 802.

Remove cofferdam system after completion of the work without damaging the finished work or existing adjacent structures. Portions of the cofferdam system which remain within concrete permanent work in accordance with the Cofferdam Installation Plan shall be removed to at least 6 inches from the surface of the permanent work. Use block outs to facilitate removal and patch permanent work with compatible materials conforming to the plans and the Cofferdam Installation Plan.

817.03.2.5 Water Control Systems:

817.03.2.5.1 Well Point System: When required by plans or the engineer, a well point system shall be designed, detailed, installed, maintained, and removed by the contractor. Install the well point system around the perimeter of the excavated area in a location such that other operations will not be impeded. The well point system shall continuously maintain the piezometric level in the soil at least 5 feet below the bottom of the excavated area.

When well points are no longer required for water control, plug abandoned well in accordance with 202.06.

Install piezometers or other suitable means of monitoring within the excavated area as required by field conditions. Make daily readings or measurements of the piezometers to verify that the well point system is operational. Excavation may begin when the level is 5 feet below the proposed excavation bottom surface for at least four hours.

Provide the well point system with a back-up system of pumps and power units. If failure of the well point system occurs, add water to the excavation as rapidly as possible at no additional cost or time to the Department.

Notify the engineer after completing each excavation. Do not place concrete until the engineer has accepted the excavation.

817.03.2.6 Cleaning and Painting Containment Systems: General containment system requirements for bidding purposes may be

included in the plans.

Design, fabricate, install, operate, maintain, and remove the containment system.

Design and construct the containment system in accordance with the Contract and SSPC Guide 6, Guide for Containing Debris Generated During Paint Removal Activities. Unless specified otherwise, provide a Class 1A containment system.

Determine member capacities based on field conditions accounting for section loss, deterioration of capacity, alterations of the structure, and support conditions during all construction phases. In addition, suspended scaffolding shall be designed in accordance with the requirements of 29 CFR § 1926 Subpart (L).

817.03.2.6.1 Containment System Plan Submittal: Prepare and submit for review Containment System Plan in accordance with 811.05. The Containment System Plan and calculations shall be prepared, sealed, signed and dated by a professional engineer registered in Louisiana.

Submit reviewed and accepted Containment System Plan as part of the Pollution Control and Monitoring Plan in accordance with 811.05.9. Include in the Containment System Plan as a minimum the following:

1. Describe the proposed containment system, including methods for collecting debris, and containment enclosure components.

2. A description of the ventilation system components and information including the fan curve and design point on the proposed dust collector.

3. A description and details of materials, seals, supports, connection hardware, anchorages, scaffolding, air ventilation and filtration systems, internal lighting and methods of attachment to the structure.

4. Procedures and details for installation and removal, including detailed information on attachment points to the structure.

5. Removal or retraction details to address weather events or maintenance of traffic requirements. Show components of the containment system to be removed and the methods of removal required to prevent an overstress of bridge members or the structure as a whole.

6. Drawings, including plan and elevation views of the containment system showing vertical and horizontal clearances to be maintained over highways, railways, and waterways.

7. Calculations, including assumptions, ventilation criteria if applicable, and a complete structural analysis. Demonstrate that the additional dead, live, and wind loads imposed by the containment system and construction activities, including contractor's equipment train do not cause overstress of

containment system or bridge members or compromise the structural integrity of the bridge. Check global stability of the containment system and structure. Show anticipated loads on the structure and the maximum permissible debris and wind loads permitted on the containment system.

817.03.2.6.2 Design and Construction Requirements: Design, construct, operate, and maintain containment system in accordance with 811.09.5 and Section 817.

Provide environmental, public and worker protection complying with 811.09 and the contract. Provide specified and required external and internal clearances.

Design, construct, operate, and maintain containment system to minimize vehicular, railway, and marine traffic disruptions. Unless otherwise specified, maintain existing vertical and horizontal highway, railway and waterway clearances. Provide capability of being removed, retracted, or opened to reduce wind load on the structure during adverse weather or to maintain required vertical and horizontal highway, railway, and waterway clearances.

Provide a containment system that can be removed or lowered and secured within 24 hours. Limit the containment system size to an area that will not damage the structure under a 55 mph wind speed.

Design, construct, operate, and maintain containment system so that the additional dead, live, and wind loads imposed by the containment system and construction activities do not cause damage to the structure, overstress of bridge members, or compromise the structural integrity of the bridge.

Permanent attachments or removal of existing fasteners to make temporary connections to the structure will not be allowed without written approval of the Bridge Engineer. Welding or drilling and bolting connections to steel bridge members are prohibited. Attachments to substructure elements are subject to review and acceptance by the Bridge Engineer. Attachments shall be temporary and shall not cause damage to the structure.

Design and construct platforms and their components to support at least four times their maximum applied load. Design, construct, operate, and maintain cables to support at least six times their maximum applied load. Comply with applicable OSHA regulations regarding rigging, staging, and scaffolding. At a minimum, meet OSHA 3150, A Guide to Scaffolding Use in the Construction Industry and Federal Specification RR-C-27-102, Chains and Attachments-Welded and Weldless.

Design, construct, operate, and maintain inside lighting in accordance with SSPC Guide 12, Guide for Illumination of Industrial Painting Projects.

Provide lighting to a minimum intensity of 20 ft-cd for general, 50 ft-cd for work, and 200 ft-cd for inspection.

Use fire retardant materials.

The containment system EOR shall certify that each installation conforms to the submitted, reviewed, and accepted Containment System Plan prior to use and shall inspect and recertify after each modification and after any hurricane, tropical storm, or local storm event affecting the work area.

Maintain the containment system and comply with the working drawings. Modifications require prior submittal, review and acceptance by the Project Engineer.

Coordination through the Project Engineer with permitting agencies is required for construction activities involving structures over waterways. U.S. Coast Guard approval will be required for any closures of, obstructions within, or reductions of vertical or horizontal clearance within navigable waterways. Comply with all requirements for interruptions, closures, obstructions, and clearance reductions affecting marine traffic.

Waterway permits and requirements shall be obtained and coordinated through the Project Engineer. For emergencies affecting navigation, immediately and directly contact the U.S. Coast Guard and/or the U.S. Coast Guard Marine Safety Office, and then notify the Project Engineer. Activities in the waterway will not be allowed without prior approval of the US Coast Guard.

Existing navigation lighting and aerial beacons shall be maintained at all times for the duration of the contract as well as additional containment obstruction lighting required by the U.S. Coast Guard.

In the event of a named hurricane or tropical storm forecasted to enter the work area within 72 hours, or in the event of an evacuation order in the work area, remove and re-install the containment system, equipment, and materials. The resulting delay will be considered an excusable, compensable delay in accordance with 108.07 and reimbursement will be made by force account in accordance with 109.04.3.

Repair damage to the structure caused by the containment system or construction activities to the satisfaction of the Project Engineer. Submit repair procedures to the Project Engineer for review prior to performing repairs.

817.04 MEASUREMENT.

817.04.1 Temporary Detour Bridge: Temporary detour bridge will be measured by the square foot of completed bridge and shall include construction, all striping, removal of the detour bridge, and restoration of the affected project site to pre-construction condition. When constructed in accordance with the design shown on the plans, measurement will be made by multiplying the clear roadway width by the length of bridge from beginning bridge joint at abutment to ending bridge joint at abutment. When allowed, and constructed with an alternate design, the measurement will not exceed the quantity required for the design shown on the plans.

When the contract does not include items for "Temporary Pavement Markings," these markings will be included in the items for "Temporary Detour Bridge."

817.04.2 Construction Access Bridge: When an item for "Construction Access Bridge" is included in the contract, the construction access bridge will be measured on a lump sum basis and shall include construction and removal of the access bridge and restoration of the affected project site to pre-construction condition.

When the contract does not contain an item for "Construction Access Bridge," the construction access bridge construction, removal and restoration of the affected project site to pre-construction condition will not be measured for payment.

Incidental items such as additional clearing and grubbing will not be measured for payment.

817.04.3 Temporary and Contractor Sheeting: Temporary sheeting will be measured in accordance with Section 802. Contractor sheeting will not be measured for payment.

817.04.4 Falsework and Formwork: Falsework and formwork will not be measured for payment.

817.04.5 Cofferdams: When an item for "Cofferdams" is included in the contract, the cofferdams will be measured on a lump sum basis.

When the contract does not contain an item for "Cofferdams," the cofferdams and cribs will not be measured for payment.

817.04.6 Water Control System: When an item for "Water Control System," is included in the contract, the water control system will be measured on a lump sum basis. Plugging of wells for well point systems will not be measured for payment and will be included in the cost for the water control system.

When the contract does not contain an item for "Water Control System", the contractor may use any approved method to control the seepage water as required within the specifications. The water control system used will not be measured for payment.

817.04.7 Cleaning and Painting Containment System: The cleaning and painting containment system will not be measured for payment and will be constructed in accordance with Sections 811 and 817.

817.05 PAYMENT. Payment for Temporary Works furnished, constructed, maintained, removed and restoration of the affected project site to pre-construction condition will be made at the contract unit price, which will include all material, labor, equipment, maintenance, submittals, and incidentals necessary to complete the item. When design is required, include the cost in the respective items.

Payment will be made under:

Item No.	Pay Item	Pay Unit
817-01	Temporary Detour Bridge	Square Foot
817-02	Construction Access Bridge	Lump Sum
817-03	Cofferdams	Lump Sum
817-04	Water Control System (Type)	Lump Sum

Section 818
Marine Pier Protection

818.01 DESCRIPTION. Furnish, install, and construct pier protection systems and components of the type and dimensions at locations specified.

818.02 MATERIALS. Comply with the following:

Structural Concrete	805
Deformed Reinforcing Steel	806,1009
Metals	807, 1013
Welding	809
Treated Timber	812
Portland Cement Concrete	901

Unless otherwise specified, use AASHTO M270 Grade 50 steel for structural steel components and hot dip galvanize after fabrication in accordance with Section 811. For structural steel connections, use ASTM A325 Type 1 mechanically galvanized high strength fastener assemblies in the sizes and lengths specified and in accordance with Section 807. Mechanically galvanize in accordance with 811.08.

Unless otherwise specified, use ASTM F593 stainless steel bolts with ASTM F594 stainless steel nuts and stainless steel washers (Alloy 304) for whaler and panel connections.

Unless otherwise specified, use 0.5 inch 1x19 Type 316 stainless steel wire rope and stainless steel hardware.

For materials in 818.02.2 through 818.02.5, use an accredited third party laboratory to test materials for compliance with performance requirements. For material compliance verification, submit to the Project Engineer for review the "Certificate of Analysis" and material test results showing that the material meets the specification criteria.

818.02.1 Pier Protection Systems: Use materials specified in the plans.

818.02.2 Ultra-High Molecular Weight Polyethylene (UHMW-PE) Panels: use ultra-high molecular weight polyethylene panels conforming to ASTM D4020. Use material with a specific gravity of 0.926 to 0.945 in accordance with ASTM D792, a minimum ultimate tensile strength of 4100 to 5100 psi and elongation at break of 330 to 420 percent in accordance with ASTM D638. Chamfer the outer edges to the specified dimensions. Color

material as specified in the plans. Use material components with a minimum thickness of 2.00 inches, and drill and counter-bore after fabrication.

Use materials free from defects that may adversely affect the performance or maintainability of individual components or installation.

818.02.3 Plastic Composite Marine Timber (PCMT): Use polyethylene or polypropylene. Color components by mixing plastic with appropriate colorants. Unless otherwise specified, use alternating black and yellow walers. Provide components containing ultraviolet (UV) inhibitors and antioxidants. Provide components containing hindered amine light stabilizers to provide sufficient resistance to UV light degradation. Conform to the properties of Table 818-1.

A standard commercial product is one that has been sold or is being currently offered for sale on the commercial market through advertisements or manufacturer's catalogs or brochures, and represents the latest production model. Additional features that improve the product, not specifically prohibited by this specification, but which are a part of manufacturer's standard commercial product, may be permitted in the PCMT being furnished. Submit for review documentation demonstrating that the PCMT being supplied have been installed on at least two projects constructed no less than 4 years prior, and are currently performing satisfactorily.

Use seamless smooth repairable outer skin PCMT with square cross section and rounded corners. Cut both ends square.

Use materials free from defects that may adversely affect the performance or maintainability of individual components or installation.

Use straight or curved PCMTs. When specified, reinforce the PCMT with fiberglass elements conforming to Table 818-2.

Use PCMTs with dimensions and tolerances conforming to Table 818-3.

Table 818-1
Plastic Properties

TEST METHOD	PARAMETER	COMPONENT	REQUIREMENT
ASTM D792	Density	Skin	Unblown plastic - 55-63 lb./cu. ft
ASTM E12	Density	Core/Annulus	34-50 lb./cu. ft
ASTM D570	Water Absorption	Skin	24 hr.: < 3.0% wt. Increase 2 hr.: < 1.0% wt. Increase
ASTM D746	Brittleness	Skin	No break at -40°F
ASTM D746 modified	Impact Resistance	Skin	Greater than 4 ft-lb./in.
ASTM D2240	Hardness	Skin	45-55 (Shore D)
ASTM D4329 UVA-340	Ultraviolet	Skin/Core/Annulus	No more than 10% change in Shore D durometer hardness after 500 hours exposure
ASTM D4060	Abrasion	Skin	Weight Loss:< 0.5 g Wear Index: 2.5 to 3.0 Cycles = 10,000 Wheel = CS17 Load = 2.2 lbs.
ASTM D543 modified, Procedure I	Chemical Resistance	Skin/Core/Annulus Sea Water Gasoline No. 2 Diesel	 < 1.5% weight increase < 7.5% weight increase < 6.0% weight increase
ASTM D638	Tensile Properties	Skin/Core/Annulus	Minimum 500 psi at break
ASTM D695	Compressive Modulus	Skin/Core/Annulus	Minimum 40,000 psi
ASTM F489	Coefficient of Friction	Skin	Maximum 0.25, wet or dry
ASTM D1761 Section 102	Nail Pull Out	Skin/Core/Annulus	Minimum 60 lb.

Table 818-2
Figerglass Reinforcing Elements

TEST METHOD	PROPERTY	REQUIREMENT
ASTM D4476	Flexural Strength	70,000 psi
ASTM D695	Compressive Strength	40,000 psi

Table 818-3
Dimensions and Tolerances

Size (inch):	6 x 12	8 x 12	10 x 10	12 x 12
Length Tolerance	+/- 12 in	+/- 12 in	+/- 12 in	+/- 12 in
Width	6.0 +/- 0.25 in	8.0 +/- 0.25 in	10.0 +/- 0.25 in	12.0 +/- 0.25 in
Height	12.0 +/- 0.25 in	12.0 +/- 0.25 in	10.0 +/- 0.25 in	12.0 +/- 0.25 in
Corner Radius	2.5 +/- 0.375 in	2.5 +/- 0.375 in	1.875 +/- 0.375 in	1.875 +/- 0.375 in
Outer Skin Thickness	0.1875 +/- 0.125 in	0.1875 +/- 0.125 in	0.1875 +/- 0.125 in	0.1875 +/- 0.125 in
Distance from outer surface to reinforcing rods	1.5 +/- 0.375 in	1.5 +/- 0.375 in	1.4 +/- 0.375 in	1.7 +/- 0.375 in
Straightness (gap, bend, or bulge inside while lying on a flat surface)	< 1.5 inch per 10 feet of length	< 1.5 inch per 10 feet of length	< 1.5 inch per 10 feet of length	< 1.5 inch per 10 feet of length

818.02.4 Extruded Rubber Fender Elements: extrude elements of homogeneous rubber free from defects, including, but not limited to, impurities, pores, and cracks.

Use natural or synthetic rubber conforming to one of the following ASTM D2000 line callouts:

- D2000 3BA 720 A14, B13, C12, F19, Z1, Z2 and Z3
- D2000 4AA 720 A13, B13, C12, EA14, F17, Z1 and Z2

818.02.5 Molded Rubber Fender Elements: Mold buckling column elements of homogeneous rubber free from defects, including, but not limited to, impurities, pores, and cracks. Provide elements completely bonded to integral steel mounting plates. Fully encase the steel in rubber with a minimum thickness of 1/16 inch.

Use natural rubber to mold elements conforming to the following ASTM D2000 line callout as specified in the plans.

Unless otherwise noted, use AASHTO M270, Grade 50 steel for steel elements.

818.03 SUBMITTALS. Conform to Section 801.

Submit to the Project Engineer for review one copy of the following:

1. Manufacturer's standard and most recent product brochure and Technical Manual for the product.
2. Manufacturer's qualifications and previous installations demonstrating specified performance requirements, including installation owner contact information.
3. "Certificate of Analysis" and material test results.
4. Shop Drawings of components including dimensional tolerances. No deviation from specified dimensions or tolerances is permissible without prior approval of the Project Engineer.
5. Assembly and installation procedures.

818.04 CONSTRUCTION REQUIREMENTS. Unless otherwise specified, counter-bore holes for anchors and fasteners exposed to vessel impact. Counter-sink the top of fasteners below the surface of the fender element a minimum of 0.5 inches.

Installation of pier protection systems and components may involve underwater work.

818.04.1 Marine Pier Protection System: Construct pier protection system as specified in the plans. Pier protection system components to be included in this item will be specified in the plans.

818.04.2 Ultra-High Molecular Weight Polyethylene (UHMW-PE) Panels: Furnish and install UHMW-PE panels as specified.

818.04.3 Plastic Composite Marine Timber (PCMT): Manufacture PCMT in a continuous process resulting in no joints within the member. Provide PCMT's composed of a coextruded outer skin of dense, unblown plastic, an inner core of foamed plastic manufactured prior to the manufacture of the timber, and an annulus of foamed plastic encapsulating the reinforcing elements.

818.04.3.1 Fabrication: Fabricate the outer skin of the PCMT continuous, homogenous and smooth throughout the entire length and perimeter of the timber. Form by coextruding a plastic material at the same time that the annulus material is extruded. Conform to the applicable sections of Table 818-1. Occasional blisters and pockmarks may be allowed in the outer skin.

Include a minimum 7.5 percent (by weight) stable bromine/antimony trioxide as a flame-retardant additive in the co-extruded outer skin. Include in each shipment delivered to the job site a quality control report from the manufacturer certifying these minimum requirements are satisfied.

Fabricate the annulus of the PCMT as a continuous foamed structure, black in color, throughout the length of the PCMT. Melt fuse the annulus to the inner core in such a manner that the joint between the inner core and the annulus develops the full strength of the plastic.

When reinforcing elements are specified, provide four 1.25-inch diameter reinforcing elements in the specified cross section. Arrange the reinforcing elements in a rectangular pattern with one bar in each corner of the cross section within the annulus of the PCMT. Use reinforcing elements of standard industry make and appearance, and free from kinks and sharp bends. Provide reinforcing elements the length of the PCMT, terminating flush with the ends, with the end of the element exposed. Do not use supports for the reinforcing element in the PCMT. Relieve residual stresses in the reinforcing elements through a post-production treatment.

Fabricate the inner core of the timber as a continuous homogenous foamed structure which reflects a consistent cell structure when viewed across the grain, black and uniform in color, throughout the length of the PCMT. Butt joints as required for manufacturing may be utilized provided the full strength of the member is developed in the joint. No singular void is allowed in excess

of 3 percent of the total foamed cross sectional area and greater than 3 inches in length.

Relieve residual stresses in PCMTs by performing a post-production operation.

Provide a copy of the owner's field guide with the first shipment of PCMTs to the job site. Include information and diagrams describing and illustrating the recommended means for handling, placing, installing, and finishing the PCMTs.

818.04.3.2 Design and Performance: Provide PMCT's conforming to the structural characteristics of Table 818-4. Provide an independent laboratory report verifying the yield stress and the Modulus of Elasticity of a full-size test specimen. The Modulus is to be taken at a strain of 0.01 inches per inch, where strain equals (6) x (depth of cross section) x (deflection) / (span length squared) and where Modulus of Elasticity equals (load) x (span length cubed) / [(48) x (deflection) x (moment of inertia)].

Table 818-4
Structural Properties

Size (inch):	6 x 12 (Strong Axis)	8 x 12 (Strong Axis)	10 x 10	12 x 12
Fb (min.) Reinforced with 4 ea. 1.25 inch dia. bars	NA	5155 psi	4517 psi	3466 psi
Fb (min.) Unreinforced	860 psi	860 psi	860 psi	860 psi
Weight - Reinforced	26 – 32 lb/ft	27 - 33 lb/ft	29 - 36 lb/ft	41 – 50 lb/ft
Weight - Unreinforced	23 – 29 lb/ft	25 – 31 lb/ft	27 – 33 lb/ft	39 – 47 lb/ft

Fb (min.) = Yield Stress in Bending (psi)
Weight = pound per foot

Provide PCMT's and accessories of the same classification that are interchangeable. Provide a representative sample of the PCMT clearly marked with the manufacturer's name and distinct serial number near each end of the product.

818.04.3.3 Quality Assurance: Manufacture with a Quality Assurance Program and provide PMCT's meeting the specified material, fabrication, design, and performance specifications.

The Project Engineer will perform a visual inspection of each complete PCMT for compliance with the appropriate requirements of this specification.

The Project Engineer may also inspect manufacturing records to ensure that the PCMT's conform to these specifications.

Provide documentation of test results of the product, meeting the requirements of this specification, performed by a testing laboratory independent of the manufacturer, and under the direction of a testing engineer from the testing laboratory. Provide as a minimum the following:

A copy of the test report showing the results of the physical and mechanical test listed in Table 818-1. For these tests, extract all test specimens from a full-scale product of the specified size. The results of these tests may be extended through engineering calculations, to a product of another size only if the other size has the same or smaller cross section than the tested product.

Cut test specimens from plastic from the full-scale product, except those tests that require the entire cross section of the product to be tested. Test the product full-scale in bending, to quantitatively determine the flexural modulus of elasticity and the bending yield stress. Scale model tests are not acceptable. Use a test configuration which provides three point bending, with the product simply supported at two locations, with the load applied equidistant from the two supports. Use a supported span to depth ratio of a minimum of 16:1. Load the product at least until the specified minimum yield stress is reached. During the test, load and record the corresponding deflection data. Measure deflection at the load point, and at two other points, each equidistant between the supports and the load. Measure deflection at least at 1,000 pound load increments.

Use load and deflection data acquired during the test to calculate the stiffness (EI), and the bending stress. The flexural modulus of elasticity is calculated by dividing EI by the moment of inertia of the cross section of the product. Calculate the properties utilizing standard elastic beam flexure formulas. Report the stiffness (EI) as the average of the stiffness at all measurement locations, between zero load and half the load corresponding to the specification yield stress. The specified minimum yield stress in bending is required to be reached before failure of the product. Calculate stress at the load point, on the tension side of the PCMT.

818.04.3.4 Transportation and Installation: Transport the PMCT in a manner to minimize any scratching or damage to the outer surface.

Install in accordance with the manufacturer's recommendations and guidelines as noted in the owner's field guide and as specified.

818.04.4 Extruded Rubber Fender Elements: Install extruded rubber fender elements as specified. When necessary, close the bore with

molded end closure, rubber plugs, or other acceptable means to prevent bore filling with material.

Provide the Project Engineer with certified performance curves, certificate of analysis, and material test reports for rubber compound, furnished by the manufacturer's testing laboratory or an independent testing agency, attesting that each product or material furnished meets the specification.

Manufacturer of extruded, direct-contact fenders shall have been manufacturing extruded rubber marine fenders for at least 5 years and show proof of at least three installations, each having been in service at least three years and currently performing satisfactorily.

818.04.5 Molded Rubber Fender Elements: Erect buckling column in the specified location and attach to the pier protection components using the specified hardware.

Performance requirements for fender elements are as follows.

Minimum Energy absorbed = 39 ft-kips $\pm$ 10 percent
Maximum Reaction Force = 43 kips $\pm$ 10 percent

Provide fender elements capable of absorbing a horizontal shearing force equal to 30 percent of its rated reaction, while simultaneously absorbing the specified minimum energy without exceeding the specified maximum reaction.

Provide a minimum and maximum allowable fender standoff adequate to prevent contact between the bridge and other objects, and measured as indicated in the plans.

Submit to the Project Engineer a certified test report or certificate of conformance or compliance, furnished by a recognized independent domestic testing lab, attesting that each product or material furnished under this specification meets the requirements herein. Furnish certified test reports or certificates for the rubber compound and the steel.

Manufacturer of rubber fender elements shall have been manufacturing rubber fender elements for at least 5 years and show proof of at least 3e installations, each having been in service at least three years and currently performing satisfactorily.

818.05 MEASUREMENT. Pier protection system will be measured per lump sum.

UHMW-PE panels will be measured per square foot of material satisfactorily installed and accepted.

Plastic composite marine timber (unreinforced/reinforced) will be measured by the linear foot of installed and accepted timber.

Extruded rubber fender elements will be measured by the linear foot of installed and accepted fender element.

Molded rubber fender elements will be measured per each fender element installed and accepted.

818.06 PAYMENT. Payment will be made at the contract unit price which includes all material, fabrication, testing, certification, divers, mounting fasteners and anchors, tools, equipment, labor, transportation and incidentals, and the performance of all work necessary to complete the work.

Payment will be at the contract unit price under:

Item No.	Pay Item	Pay Unit
818-01	Pier Protection System (Marine)	Lump Sum
818-02	UHMW-PE Panels	Square Foot
818-03	Unreinforced Plastic Composite Marine Timber (Size)	Linear Foot
818-04	Reinforced Plastic Composite Marine Timber (Size)	Linear Foot
818-05	Extruded Rubber Fender Elements	Linear Foot
818-06	Molded Rubber Fender Elements	Each

Section 819 (Reserved)

Section 820
Movable Bridges

820.01 DESCRIPTION. Provide all material, equipment, tools, measuring devices, and labor to purchase/fabricate, shop test, transport, install/erect, align/adjust, paint, lubricate, field test, and setup a Movable Bridge as specified herein.

These specification govern both new construction projects and rehabilitation/ repair projects.

820.01.1 Structural Specifications: All specifications for bridges in other sections that are applicable to the structure of a Movable Bridge shall apply, unless otherwise specified herein or shown on the plans.

820.01.2 Mechanical System Specifications: See Section 821 for Mechanical System specifications.

820.01.3 Electrical System Specifications: See Section 822 for Electrical System specifications.

820.01.4 Operator's House/Machinery House Specifications: See Section 823 for Operator's House/Machinery House specifications.

820.02 ACRONYMS AND ABBREVIATIONS. See 101.02, 801.02, 821.02, and 822.02 for acronyms and abbreviations.

820.03 DEFINITIONS. See 101.03, 801.03, 821.03, and 822.03 for additional definitions.

Balance Blocks. Concrete blocks that can be added or removed from a counterweight to adjust the counterbalance of a movable span, usually weighing approximately 80 pounds.

Bobtail Swing Span Bridge. A swing span bridge where the length of the movable span on the channel side of the pivot girder is longer than the opposite length. Balancing the span requires a counterweight.

Counterweight. A large heavy concrete and/or steel structure used to counterbalance the weight of a movable span or a movable barrier.

Equal Arm Swing Span Bridge. A swing span bridge where the length of the movable span on the channel side of the pivot girder is equal to the opposite length.

Lift Tower. Towers on a vertical lift bridge that facilitate lifting of the movable span.

Machinery Deck. Platform on top of a vertical lift bridge lift tower where the span drive machinery is located.

Movable Barrier. A barrier that is lowered perpendicular to the roadway to provide a physical barrier to vehicular traffic when a movable bridge is open to marine traffic.

Movable Bridge. A bridge, usually crossing a navigable waterway that has a span that can be moved to open the waterway for marine navigation.

Movable Bridge (Bascule Span). A movable bridge that has a cantilevered movable span which rotates vertically about a horizontal axis to allow marine navigation of the waterway with unlimited vertical clearance.

Movable Bridge (Pontoon Span). A movable bridge that has a floating movable span which rotates horizontally about a pivot point to allow marine navigation of the waterway with unlimited vertical clearance. The floating span becomes part of the fender system when the span is in the open position.

Movable Bridge (Swing Span). A movable bridge that has a cantilevered movable span which rotates horizontally about a vertical axis to allow marine navigation of the waterway with unlimited vertical clearance.

Movable Bridge (Vertical Lift Span). A movable bridge that has a counterweighted movable span which lifts vertically between two towers to allow marine navigation of the waterway with limited vertical clearance.

Movable Span. The span on a movable bridge that can move by means of permanently installed mechanical and electrical systems to allow marine navigation of the waterway.

Pivot Girder. Girder on a swing span bridge that is located on the center pivot bearing and supports the entire weight of the movable span during operation.

Sheave. Large pulley located on top the lift towers of a vertical lift bridge which support the counterweight, counterweight wire ropes, and the movable span. Sheaves facilitate counterbalancing and movement of the movable span.

Sheave Trunnion. Large axle on which a sheave rotates.

Span Trunnion. Large axle on which a bascule span rotates.

System Integrator. A designated representative of the contractor that has the knowledge, experience, responsibility, and authority to integrate the work of all engineering disciplines related to the project.

Traffic Gate. A gate that is lowered perpendicular to the roadway to provide a visual warning to vehicular traffic when a movable bridge is open to marine traffic.

Trunnion. Large axle on which any heavy movable structure or component rotates. (e.g. bascule span, sheave, counterweight, etc.)

Trunnion Bearings. Large sleeve or roller bearings that facilitate rotation of a trunnion.

Unequal Arm Swing Span Bridge. See "Bobtail Swing Span."

820.04 MATERIALS.

Structural Concrete	805.02
Reinforcing Steel	806.02
Structural Metals	807.02
Steel Grid Flooring	808.02
Bridge Railings, Hand Railings and Permanent Roadway Barriers	810.02
Painting and Protective Coatings	811.03
Treated Timber	812.02
Concrete Approach Slabs	813.02
Bearings	814.02

Joints	815.02
Drainage Systems	816.02
Mechanical Systems	821.04
Electrical Systems	822.04
Facilities	823.04
Portland Cement Concrete	901.02
Epoxy Resin Systems	1017

All material for fabricated items and all construction material for movable bridges shall be new.

820.05 GENERAL REQUIREMENTS.

820.05.1 Federal, State, and Local Codes and Laws:

Providing work in accordance with Federal, State, and local codes, laws, ordinances, and codes listed in 821.05.1 is a minimum requirement. Work specified in the Contract that is more stringent than that required by the Federal, State, and local codes, laws, and ordinances shall also be provided. Work that does not meet the requirements of the Federal, State, and local codes, laws, and ordinances, and/or the Contract documents shall be corrected at no additional cost or time to the Department.

820.05.2 Specifications and Standards: Comply with 821.05.2 unless otherwise specified.

820.05.3 Workmanship: Unless otherwise directed, use best industry practices at all times during the fabrication, transportation, erection, installation, alignment, adjustment, and testing of the movable bridge structure and performance of all related work.

820.05.4 Personnel: Provide construction personnel who are knowledgeable and experienced in the construction of movable bridges or other similar heavy movable structures. Although the plans are of sufficient detail and quality to convey the intent of the design to an experienced contractor, they do not necessarily depict every detail or specify every incidental or ancillary item required for the movable bridge to be properly fabricated, transported, erected, aligned, adjusted, tested, painted, and to function in accordance with the intent of the Contract.

Provide a "System Integrator" to perform the following:

1. Point of Contact: Act as the point of contact between the Department, the contractor, and the subcontractors, for all construction issues and issues related to the review of submittals.

2. Contract Compliance of Submittals: Review and manage submittals from the various subcontractors to insure they comply with the Contract prior to forwarding to the Bridge Engineer for review.

3. Submittal Corrections: Review submittals that were returned for correction to verify that all comments were addressed prior to returning submittals to the Bridge Engineer for review.

4. Coordination of Work: Coordinate the work of the various subcontractors to assure that one subcontractor's work does not delay or conflict with the work of another subcontractor, and ensure that all work proposed by one subcontractor will integrate correctly with the work from another subcontractor.

5. Dispute Mediation: Mediate and quickly resolve disputes between subcontractors to prevent construction delays.

6. Final Setup and Testing: Oversee final setup and testing of the movable span. Submit testing procedures for review. Verify all mechanical and electrical equipment are installed and adjusted correctly, and the movable span is performing properly before requesting a final inspection of the span by the Bridge Engineer.

820.06 MOVABLE BRIDGE SUBMITTALS.

Movable Bridge submittals shall comply with Section 105.02.2, 801.05, 821.06, and 822.06. They include shop drawings, cut sheets, field measurements, calculations, manuals, and any other document that the contractor is required by the Contract to produce and submit to the Bridge Engineer for review or record.

The purchase or fabrication of any item prior to the completion of the submittal process is at the contractor's risk. Said items that are later determined to be unacceptable for use on the project, will be rejected by the Department at the contractor's expense, even if the items purchased or fabricated are identical to that shown on the contract documents (plan error).

Always copy the Project Engineer whenever transmitting submittals.

820.06.1 Lubrication and Equipment Setting Drawings: Prepare and submit lubrication and equipment setting drawings to the Bridge Engineer for review. Lubrication and equipment setting drawings shall show the layout of all mechanical and electrical items on the bridge structure. Identify each lubrication point with an arrow and list lubricant type and frequency of lubrication. Lubrication of manufactured items shall be based on the manufacturer's recommendations.

Point to, and identify, mechanical and electrical items with pertinent set points, and list the set point values (e.g. Relief Valve, 1,500 psi).

These sheets should not be prepared until the final setup of the bridge has been completed.

1. Submittal Procedure: Submit lubrication and equipment setting drawings electronically to the Bridge Engineer for review. The electronic file shall be a single PDF file. For bidding purposes, allow a review period of 14 calendar days.

After review, rejected drawings will be stamped "Returned for Correction," will be initialed and dated by the reviewer, will have comments marked in red, and will be returned to the contractor electronically as a PDF file. Correct errors and resubmit electronically to the Bridge Engineer for review. This process will repeat until the Department has no comments. Lubrication and equipment setting drawings will then be stamped "Accepted in accordance with LSSRB 105.02," initialed and dated by the reviewer, and returned to the Contractor electronically as a PDF file.

2. Deliverables: Provide to the Bridge Engineer for distribution, one full scale paper reproduction of all lubrication and equipment setting drawings that have been stamped "Accepted in accordance with LSSRB 105.02." Print paper reproductions directly from the PDF file returned by the Department, and show the "Accepted in accordance with LSSRB 105.02" dated and initialed by the reviewer with no modifications, and laminate (10 mil min.).

Provide a 24 inch x 36 inch aluminum, outdoor, weatherproof poster frame with clear polycarbonate plastic cover for each 22 inch x 34 inch drawing. Submit frame to the Bridge Engineer for review. Hang framed drawings in the machinery room where indicated on the plans.

820.06.2 Manuals: For all movable bridge projects, prepare and submit the following manuals.

Cost of preparing and submitting the manuals shall be included in the pay items of Sections of 821, 822, and 823. The Department will withhold 5 percent of the bid price of all mechanical, electrical, and facility items (821, 822, and 823 items) until all manuals have been reviewed and accepted, and final paper reproductions have been received by the Department.

1. Bridge Operation Manual: Prepare and submit a Bridge Operation Manual to the Bridge Engineer for review.

This manual is a reference for the Bridge Operator, and it shall include a written description of span operation under normal conditions, a written description of span operation under all possible fault conditions, and a

troubleshooting guide. The Engineer of Record will supply the information in this manual to the contractor as a single PDF file.

Print and provide two paper reproductions of the Bridge Operation Manual to the Bridge Engineer for review. For bidding purposes, allow a review period of 21 calendar days.

Format shall be in accordance with "Paper Reproductions" and "Letter Size Sheets" from 801.05.2.2 except that sheets will not show an "Accepted in accordance with LSSRB 105.02" stamp.

Provide each manual with a white, premium, heavy duty, 3 D-ring binder with title sleeve. Binders shall be appropriately sized to hold enclosed material, and shall be extra wide to accommodate sheet protectors. Binders shall not be larger than 3 inches. Use multiple binders if necessary.

Provide each sheet with a top loading, 8 ½ inch x 11 inch, standard weight, clear, sheet protector. Fold half-scale plan sheets in half with printed material facing out, and insert in sheet protectors.

Provide a top loading, 8 ½ inch x 11 inch, standard weight, clear, tab index sheet protector with labeled tab to delineate sections.

If the paper reproductions of the Bridge Operation Manual are rejected after review, the title sheet of both copies will be stamped "Returned for Correction," and both copies will be returned to the contractor with instructions for corrections. Correct errors and resubmit to the Bridge Engineer for review. This process will repeat until the Department has no comments. The title sheet will then be stamped "Accepted in accordance with LSSRB 105.02," initialed and dated by the reviewer, and distributed by the Department.

2. Mechanical Operation and Maintenance Manual: See Section 821 for the Mechanical Operation and Maintenance Manual requirements.

3. Electrical Operation and Maintenance Manual: See Section 822 for the Electrical Operation and Maintenance Manual requirements.

820.07 CONSTRUCTION REQUIREMENTS.

820.07.1 Position of Movable Span during Construction: For new construction, the movable span(s) may be erected in the "open to navigation" or "closed to navigation" positions as allowed by the plans and the Project Engineer. At all times, construction must comply with the United States Coast Guard (USCG) permit or negotiated agreement with the USCG.

Maintain marine and vehicular traffic requirements and closures as specified in the plans.

820.07.2 Survey of Structural Elements: Perform all survey measurements of structural bridge elements that may be affected by temperature and sunlight in the early morning prior to development of a temperature differential in the structure.

820.07.3 Shop Assembly of Structural Steel: Shop assemble the structural steel for all movable spans in accordance with 807.04.10 and mark for reassembly in accordance with 807.04.24.

820.07.4 Construction Sequence: Adhere to construction sequencing specified herein unless otherwise specified on the plans. Any deviation from the construction sequencing must be submitted to the Bridge Engineer for review.

820.07.5 Concrete Test Blocks: Provide test blocks to determine the exact density (weight) of the concrete individually for the movable span deck (if applicable), the counterweight, and the balance blocks. All concrete shall be Class A unless otherwise noted on the plans. Cast test blocks early enough in the construction period such that the test data will be available when it is time for the contractor to perform counterweight calculations.

Casting and weighing test blocks must be performed in the presence of the Project Engineer. Notify the Project Engineer at least three working days in advance. Test blocks shall be of known volume, and shall contain at least one cubic foot (0.03 cu m) of concrete. For each concrete mixture, cast three test blocks. Record the exact concrete mixture used, and the weight of the test blocks the day they were cast. Continue to record the weight of each test block every day for at least seven days. If the weights are still changing after seven days, continue to record weights each day until the weights stabilize. Use the average weight of each set of three test blocks for the counterweight calculations.

For the movable span deck, select the mixture to be used and record the density for future use in the counterweight calculations.

Balance blocks have been standardized and shall weigh 80 - 85 pounds each, with a concrete unit weight of approximately 145 pounds per cubic foot. Continue to make test blocks until a mixture with this density is achieved. Record mixture for future use in casting balance blocks.

For the counterweight, concrete density shall not exceed 180 pounds per cubic foot. Record mixtures with several known densities for possible use in the counterweight.

820.07.6 Construction of Counterweight:

1. Counterweight Calculations and Shop Drawings: Counterweight dimensions shown on the plans are estimates based on an estimated design

weight of the movable span and an estimated concrete density for both the counterweight and the movable span deck. Prior to beginning construction of the counterweights, prepare and submit to the Bridge Engineer for review calculations and shop drawings that show the proposed construction of the counterweight and the proposed concrete density to be used. Calculations shall be based on the submitted shop drawings for the movable span structural steel, grid deck, concrete deck (including actual concrete density from test blocks), concrete reinforcing steel, barrier rails, sidewalks, counterweight wire ropes, balance chains, mechanical equipment, electrical equipment, nuts, bolts, washers, and any other appurtenances that are part of the movable span. Calculations shall show the center of gravity of the movable span and the counterweight if needed.

Maintain the method of construction shown on the plans and plan dimensions. In the event that the counterweight must be resized, shape and construction of counterweight shall be as similar to the plans as practical. If needed, add plate steel or steel billets to the counterweight to increase weight with approval of the Bridge Engineer. If used, they shall be uniformly distributed throughout the counterweight, individually supported within the counterweight, clean and free of oil or grease, and not galvanized or coated with other materials. Vertical clearance between the counterweight and the roadway shall be not less than 5 feet when the movable span is in the fully open position including allowable over-travel. Vertical clearance between the counterweight and any other obstruction (barrier rail, hand rail, etc.) shall be not less than 2 ½ feet in the fully open position, including allowable over-travel. In calculating minimum clearance, counterweight ropes shall be assumed to stretch 2 percent of their calculated length.

2. Counterweight Pockets: Size counterweight pockets to hold balance blocks equal to 15 percent of the weight of the counterweight. Calculations shall assume that the counterweight pockets are 1/3 full of balance blocks.

Any counterweight pocket exposed to rainwater shall have at least two drain holes that are at least 6 inches in diameter.

For vertical lift bridges, size counterweight pockets so that the balance blocks do not show above the sides of the pocket.

For bascule spans with counterweights that rotate with the movable span, position counterweight pockets to allow for adjustment of the center of gravity of the movable span. Counterweight pockets must securely hold balance blocks during operation of the movable span.

3. Balance Blocks: Fabricate balance blocks as shown on the plans and in a uniform manner using Class A concrete with a density of approximately

145 pounds per cubic foot as determined from the test blocks. Balance blocks shall weigh between 80 – 85 pounds to facilitate handling by a single worker. Weigh at least 10 percent of the balance blocks at random after they have cured to their final weight. Discard all balance blocks outside of this range, and continue weighing questionable balance blocks to the satisfaction of the Project Engineer.

Construct enough balance blocks to counterbalance the movable span when it is fully completed. A complete and balanced counterweight shall have at least 1 percent of its weight in balance blocks installed in the counterweight pockets, and at least an additional 1/2 percent of its weight in extra balance blocks to be stored on site as directed by the Project Engineer for future adjustment.

820.07.7 Installation of Alignment Critical Mechanical Equipment: Alignment critical mechanical equipment such as trunnion bearings, gears, drive shafts, gearboxes, brakes, shaft couplings, etc., shall be installed by millwrights experienced in the installation of the specified equipment. Use industry standard alignment equipment and techniques. Alignments shall meet tolerances specified in the Contract, or the manufacturer's minimum requirements, whichever is more stringent.

820.07.8 Temporary Operation and Maintenance of Movable Span: Provide qualified personnel to operate and maintain the movable bridge as directed below. All bridge operations shall be in accordance with the United States Coast Guard (USCG) permit or negotiated agreement with the USCG. While operating the movable bridge, the contractor is responsible for maintenance of the structure. In addition to 107.19, damages that are the result of either negligent operation or negligent maintenance are the responsibility of the contractor.

1. New Construction: Operate and maintain the movable span until the Department agrees to take final acceptance of the project. If the project utilizes a movable detour bridge during the construction of a new movable bridge, operate and maintain the detour bridge for the duration of the project.

2. Repair and Rehabilitation Projects: The Department will continue to operate and maintain the movable span during construction if the contractor is performing work away from the movable span such that neither his personnel nor his equipment could be harmed by its operation, and if the work being performed in no way affects the operation of the movable span. Once work begins on or within the limits of the movable span, or if the work affects the operation of the movable span, the contractor shall begin operating and maintaining the movable span. The Department's operator will remain in the

operator's house during normal operating times, and will continue to monitor the marine radio and log marine traffic, however, the contractor will be responsible for the actual operation of the movable span. If the work has involved the mechanical or electrical systems, or if the work has altered the operation of the movable span in any way, the contractor shall continue to operate the movable span until final acceptance of the project.

820.07.9 Final Setup, and Field Testing of Mechanical and Electrical Systems: Notify the Bridge Engineer 14 calendar days prior to final setup and field testing so the EOR may be present.

After installation of all mechanical and electrical systems has been completed and all weight that will remain on the movable span during operation is in place, adjust and test all mechanical and electrical systems as directed by the plans.

Prior to the inspection by the EOR, all mechanical and electrical systems shall be successfully adjusted and tested to the satisfaction of the Systems Integrator and the Project Engineer. On the day of the inspection, have personnel and equipment available to make any adjustments to the span that may be necessary such as troubleshooting and correcting the electrical system, and adjusting limit switches, buffers, span locks, brakes, time delay relays, balance blocks, relief valves, etc.

The cost of any additional inspections beyond one final and one follow-up inspection will be back-charged to the contractor.

820.07.10 Training: After the final inspection, setup, and testing of the mechanical and electrical systems have been completed, have experienced personnel provide the following training:

1. Training of Bridge Operators: Instruct Department bridge operators in the complete and correct operation of the movable span, including all fault conditions. The Bridge Operation Manual shall be the basis for this training.

Allow 14 calendar days notice for scheduling training sessions. Provide five days (eight hours each) for training sessions.

After the Department has accepted responsibility for operating the movable bridge, provide experienced personnel on two hour notice during operating hours to assist with operational problems for 30 calendar days.

2. Training of Bridge Maintenance Personnel: Instruct Department maintenance personnel as to the function, settings, adjustments, and lubrication of the mechanical and electrical systems. The Mechanical and Electrical Operation and Maintenance Manuals shall be the basis for this training.

Allow 14 calendar days notice for scheduling training sessions. Provide five days (eight hours each) for training sessions.

After the Department has accepted responsibility for maintaining the movable bridge, provide experienced personnel on two hours notice during operating hours to assist with operational/maintenance problems for 30 calendar days.

820.08 CONSTRUCTION REQUIREMENTS FOR SWING SPAN BRIDGES.

820.08.1 Construction of Approach Spans: Approach spans immediately adjacent to the movable span shall not be constructed until "End Lift Reactions and Elevations," 820.08.9 has been completed. Each approach span must match the elevation and profile of the movable span across the entire width of the roadway to within plus or minus 1/8 inch.

820.08.2 Installation of Center Pivot Bearing:

1. Installation of Anchor Bolts: Cast anchor bolts in the pivot pier with an embedded template as shown on the plans. Use survey equipment to locate template horizontally and vertically. No individual anchor bolt can be located more than plus or minus 1/4 inch from its specified location in all directions. Anchor bolts shall be vertical to within 0.5 degrees. Securely anchor template and monitor template locations while the pivot pier is placed and vibrated to assure no movement.

2. Installation of Center Pivot Bearing Base: After the pivot pier has met the requirements for form removal, orient the pivot bearing base on the anchor bolts as shown on the plans. Using the leveling screws provided, set the elevation of the top of the pivot bearing base to plus or minus 1/8 inch of the design elevation, and level in all directions with a machinist's level.

Coat leveling screws with lubricant to prevent adhesion to grout. Form up and grout under the pivot bearing base as shown on the plans using a pre-packaged non-shrink epoxy grout with a minimum seven day compressive strength of 13,000 psi. Follow grout manufacturer's installation instructions. Mix grout so it is flowable and self-leveling. Pour grout from one side of the form to prevent air from being trapped under the pivot bearing base in accordance with the manufacturer's recommendations. Grout shall have a minimum bearing contact area of 95 percent with the pivot bearing base. Packing grout under pivot bearing base is not allowed. Allow grout to cure for a minimum of two days before tightening anchor bolts and removing forms.

3. Assembly of Center Pivot Bearing: Notify the Bridge Engineer 14 calendar days prior to assembly of the center pivot bearing so the EOR may be present. Assembly must be performed on a clear, dry day.

Install the center pivot jacket on the center pivot base such that the sight gauge and fill pipe are oriented as shown on the plans. Torque bolts in accordance with the bolt specifications in Section 821. Thoroughly clean the inside of the jacket with an approved solvent to remove the protective grease applied by the shop. Use only clean, lint free rags. Wipe out solvent and apply a thin coating of the oil specified to lubricate the bearing. Similarly clean the steel disk bearing, coat with oil, and install in jacket without scratching or damaging the bearing surface. Clean the bronze disk bearing, coat with oil, and install in jacket without scratching or damaging the bearing surface. Install sight gauge and fill pipe. Add oil to the level shown on the plans. Apply the grease specified for the bearing seals to the outside of the jacket to assist with the installation of the bearing seals. Install the center pivot bearing top, and fully lubricate the seal cavity with grease. Remove leveling screws, and install steel set screws to fill hole.

4. Clean and Paint Pivot Bearing: Immediately after completing the installation of the center pivot bearing, clean the entire bearing assembly and complete the required mechanical paint system. Do not paint over name plates or sight gauge.

820.08.3 Erection of Bobtail Swing Span with Combination Concrete and Grid Deck: The following is a suggested sequence of construction that complies with the design of the movable span. Prior to construction, submit detailed erection drawings to the Bridge Engineer for review. As a minimum, the submittal shall show the sequence of construction, falsework construction, and counterweight/balance block calculations. Each time the erection blocking is adjusted, submit the blocking ordinates of the movable span to the Bridge Engineer for review.

Note that the movable span will not be balanced until the end of the erection process. All erection blocking adjustments to the movable span will be made in an unbalanced condition. Maintain stability of the movable span during construction, but allow vertical deflection as required by the erection process.

1. Erection of Pivot Girder: Check elevation of center pivot bearing top with acceptable survey equipment and adjust spacer plate if needed. Tolerance on plan elevation is plus or minus 1/8 inch. Place the pivot girder on the pivot bearing and check the elevation of the top flange. Adjust spacer plate if needed and complete connection.

2. Erection of Steel: Provide blocking under each end of the pivot girder. Provide pile supported falsework with blocking at both ends of the main girders. Provide pile supported falsework with blocking at field splices if needed. Falsework must be of sufficient strength and rigidity to support erection loading without deflection. Blocking shall be capable of adjusting to multiple profiles.

Set blocking such that the main girders match the plan "Camber" diagram. Check the profiles of each main girder on a regular basis throughout construction. Complete and finalize all span connections including main girder field splices, pivot girder, floor beams, stringers, and lateral bracing.

Adjust blocking to allow the span to fully deflect. All steel dead load will be supported by the pivot girder. Measure deflection and compare to the plan "Steel Dead Load" diagram. Submit measurements to the Bridge Engineer for review.

3. Construction of Counterweight and Placement of Grid Deck Panels: Conform to 820.07.6. Construct forms and place counterweight concrete in one continuous placement. Place grid deck panels on the span, but do not connect the grid deck panels to the bridge structure. Remove forms after the counterweight has met requirements for form removal in 805.07.

4. Placement of Concrete Deck: Adjust blocking to match the plan "Steel, Deck, and Counterweight Dead Load" diagram. Construct forms and place concrete in one continuous placement. Remove forms after the concrete deck has met requirements for form removal in 805.07.

5. Connection of Grid Deck Panels: Adjust blocking such that the plan finish grade is obtained. Connect the grid deck panels to the bridge structure as shown on the plans. After connection of the grid deck is completed, place concrete fill in specified areas.

6. Installation of Bridge Railings, Mechanical Equipment, and Balance Blocks: Set and complete bridge railings, install all mechanical equipment, and add balance blocks to balance the movable span.

820.08.4 Erection of Bobtail Swing Span with All Concrete Deck: The following is a suggested sequence of construction that complies with the design of the movable span. Prior to construction, submit detailed erection drawings to the Bridge Engineer for review. As a minimum, the submittal shall show the sequence of construction, falsework construction, and counterweight/balance block calculations. Each time the erection blocking is adjusted, submit the blocking ordinates of the movable span to the Bridge Engineer for review.

Note that the movable span will not be balanced until the end of the erection process. All erection blocking adjustments to the movable span will be made in an unbalanced condition. Maintain stability of the movable span during construction, but allow vertical deflection as required by the erection process.

1. Erection of Pivot Girder: Check elevation of center pivot bearing top with acceptable survey equipment and adjust spacer plate if needed. Tolerance on plan elevation is plus or minus 1/8 inch. Place the pivot girder on the pivot bearing and check the elevation of the top flange. Adjust spacer plate if needed and complete connection.

2. Erection of Steel: Provide blocking under each end of the pivot girder. Provide pile supported falsework with blocking at both ends of the main girders. Provide pile supported falsework with blocking at field splices if needed. Falsework must be of sufficient strength and rigidity to support erection loading without deflection. Blocking shall be capable of adjusting to multiple profiles.

Set blocking such that the main girders match the plan "Camber" diagram. Check the profiles of each main girder on a regular basis throughout construction. Complete and finalize all span connections including main girder field splices, pivot girder, floor beams, stringers, and lateral bracing.

Adjust blocking to allow the span to fully deflect. All steel dead load will be supported by the pivot girder. Measure deflection and compare to the plan "Steel Dead Load" diagram. Submit measurements to the Bridge Engineer for review.

3. Construction of Counterweight: Conform to 820.07.6. Construct forms and place the counterweight concrete in one continuous placement. Remove forms after the counterweight has met requirements for form removal in 805.07.

4. Placement of Concrete Deck: Adjust blocking to match the plan "Steel, Deck, and Counterweight Dead Load" diagram. Construct forms and place concrete in one continuous placement except for the specified closure placement. Remove forms after the concrete deck has met requirements for form removal in 805.07.

5. Installation of Bridge Railings: Adjust blocking such that the plan finish grade is obtained. Set and complete bridge railings, install all mechanical equipment, and add balance blocks to balance the movable span.

6. Concrete Closure Placement: Adjust blocking to allow the span to fully deflect. All dead load shall be supported by the pivot bearing. Complete the closure placement on the bridge deck as shown on the plans. Remove

forms after the closure placement has met requirements for form removal in 805.07.

820.08.5 Erection of Equal Arm Swing Span with All Concrete Deck: The following is a suggested sequence of construction that complies with the design of the movable span. Prior to construction, submit detailed erection drawings to the Bridge Engineer for review. As a minimum, the submittal shall show the sequence of construction, falsework construction, and balance block calculations. Each time the erection blocking is adjusted, submit the blocking ordinates of the movable span to the Bridge Engineer for review.

Maintain stability of the movable span during construction, but allow vertical deflection as required by the erection process.

1. Erection of Pivot Girder: Check elevation of center pivot bearing top with survey equipment and adjust spacer plate if needed. Tolerance on plan elevation is plus or minus 1/8 inch. Place the pivot girder on the pivot bearing and check the elevation of the top flange. Adjust spacer plate if needed and complete connection.

2. Erection of Steel: Provide blocking under each end of the pivot girder. Provide pile supported falsework with blocking at both ends of the main girders. Provide pile supported falsework with blocking at field splices if needed. Falsework must be of sufficient strength and rigidity to support erection loading without deflection. Blocking shall be capable of adjusting to multiple profiles.

Set blocking such that the main girders match the plan "Camber" diagram. Check the profiles of each main girder on a regular basis throughout construction. Complete and finalize all span connections including main girder field splices, pivot girder, floor beams, stringers, and lateral bracing.

Adjust blocking to allow the span to fully deflect. All steel dead load will be supported by the pivot girder. Measure deflection and compare to the plan "Steel Dead Load" diagram. Submit measurements to the Bridge Engineer for review.

3. Placement of Concrete Deck: Adjust blocking to match the plan "Steel and Deck Dead Load" diagram. Construct forms and place concrete in one continuous placement except for the specified closure placement. Remove forms after the concrete deck has met requirements for form removal in 805.07.

4. Installation of Bridge Railings, Mechanical Equipment and Balance Blocks: Adjust blocking such that the plan finished grade is obtained. Set and complete bridge railings, install all mechanical equipment, and add balance blocks to balance the movable span.

5. Concrete Closure Placement: Adjust blocking to allow the span to fully deflect. All dead load shall be supported by the pivot bearing. Complete the closure placement on the bridge deck as shown on the plans. Remove forms after the closure placement has met requirements for form removal in 805.07.

820.08.6 Erection of Equal Arm Swing Span with Grid Deck: The following is a suggested sequence of construction that complies with the design of the movable span. Prior to construction, submit detailed erection drawings to the Bridge Engineer for review. As a minimum, the submittal shall show the sequence of construction, falsework construction, and balance block calculations. Each time the erection blocking is adjusted, submit the blocking ordinates of the movable span to the Bridge Engineer for review.

Maintain stability of the movable span during construction, but allow vertical deflection as required by the erection process.

1. Erection of Pivot Girder: Check elevation of center pivot bearing top with acceptable survey equipment and adjust spacer plate if needed. Tolerance on plan elevation is plus or minus 1/8 inch. Place the pivot girder on the pivot bearing and check the elevation of the top flange. Adjust spacer plate if needed and complete connection.

2. Erection of Steel: Provide blocking under each end of the pivot girder. Provide pile supported falsework with blocking at both ends of the main girders. Provide pile supported falsework with blocking at field splices if needed. Falsework must be of sufficient strength and rigidity to support erection loading without deflection. Blocking shall be capable of adjusting to multiple profiles.

Set blocking such that the main girders match the plan "Camber" diagram. Check the profiles of each main girder on a regular basis throughout construction. Complete and finalize all span connections including main girder field splices, pivot girder, floor beams, stringers, and lateral bracing.

Adjust blocking to allow the span to fully deflect. All steel dead load will be supported by the pivot girder. Measure deflection and compare to the plan "Steel Dead Load" diagram. Submit measurements to the Bridge Engineer for review.

3. Installation of Grid Deck Panels: Adjust blocking such that the plan finish grade is obtained. Place and connect the grid deck panels to the bridge structure as shown on the plans. After connection of the grid deck is completed, place concrete fill in specified areas.

4. Installation of Bridge Railings, Mechanical Equipment and Balance Blocks: Set and complete bridge railings, install all mechanical equipment, and add balance blocks to balance the movable span.

820.08.7 Rack and Pinion Installation (Swing Span): For swing span bridges with rack and pinion gears, installation requirements are similar to the requirements for vertical lift bridge rack and pinion gears.

820.08.8 Span Balancing (Swing Span): Perform span balancing in the morning when the effects of temperature on the main girders are at a minimum. Do not perform span balancing during wind that could cause the balance wheels to contact with the track.

After the movable span is fully constructed, including all mechanical and electrical equipment, and deflected under dead load, adjust the balance wheels to have a 1/2-to 3/4-inch gap between the balance wheels and the track.

Check the vertical profile ordinates of both main girders and compare with the ordinates shown in the plans for the span swinging freely with equal end lifts. Adjust balance blocks, swing the span open and closed, and recheck ordinates. Repeat until the ordinates match the ordinates shown on the plans as close as achievable. Operate the span multiple times and recheck ordinates to ensure the results are repeatable.

Adjust balance wheels to have a minimum 1/16-inch gap with the track at all times during the operation of the span. Swing the span open and closed. If at any point the gap between the balance wheels and the track exceeds 3/16 inch, that portion of the track must be re-leveled.

820.08.9 End Lift Reactions and Elevations (Swing Span): Notify the Bridge Engineer 14 calendar days prior to measuring the end lift reactions so the EOR or a designated representative may be present. Measurement of end lift reactions and elevations shall be performed after span balancing has been completed.

Submit cut sheets to the Bridge Engineer for review of hydraulic jacks and pressure gauges. Select jack size so that the expected load will register between 2,000 and 4,000 psi. Use 0-5,000 psi digital pressure gauges with an accuracy of ± 0.25 percent full scale. New gauges shall come with NIST certification. Used gauges shall be newly certified. Power units shall be capable of holding the load for the duration of the measurement process without significant leakage of hydraulic fluid.

Use two identical hydraulic jacks with known bore sizes for the long arm, and two identical hydraulic jacks with known bore sizes for the short arm. All four jacks shall be the same size for an equal arm span. Locate the jacks at the end lift locations as shown on the plans. Each jack shall be connected to a

separate power unit. Pressure gauges should be mounted directly to the jacks, if possible. Otherwise, pressure gauges shall be located as close to the jacks as practical. Jacks must be completely free of air before measurement.

Measure end lift reactions in the morning when the effects of temperature on the main girders are at a minimum. Jack all four corners of the span simultaneously until design reactions are achieved. Allow time for pressure readings to stabilize. Monitor elevations to ensure that each corner is lifting correctly. Survey roadway surface elevations at each gutter line, the profile grade line at each end of the span, and at the pivot girder location. Tolerances between survey and plan elevations are ± 1/4 inch at span ends and ± 3/8 inch at the pivot girder location. If elevations are not within tolerances, adjust spacer plate under the pivot girder while weighing the span under 820.08.10 and repeat the process until tolerance is achieved.

After end lift elevations have been determined, construct risers for end wedge shoes and install/shim the end wedge shoes to meet elevations. At this point, approach spans adjacent to the movable span may be constructed to match movable span elevations.

820.08.10 Weighing the Movable Span (Swing Span): Notify the Bridge Engineer 14 calendar days prior to weighing the movable span so the EOR or a designated representative may be present. Weighing of the movable span shall be performed after measurement of end lift reactions has been completed. Spacer plate under the pivot girder can be adjusted at this time if required.

Submit Cut Sheets for hydraulic jacks and pressure gauges to the Bridge Engineer for review. Select jack size so that the expected load will register between 6,000 and 8,000 psi. Use 0-10,000 psi digital pressure gauges with an accuracy of ± 0.25 percent full scale. New gauges shall come with NIST certification. Used gauges shall be newly certified.

Use two identical hydraulic jacks with known bore sizes, and locate them under the pivot girder where shown on the plans. Each jack should be connected to a separate power unit. Power units shall be capable of holding the load for the duration of the weighing process without significant leakage of hydraulic fluid. Pressure gauges should be mounted directly to the jacks if possible. Otherwise, pressure gauges shall be located as close to the jacks as practical. Jacks shall be completely free of air before measurement.

Retract wedges and raise the span until all load has been removed from the pivot bearing. Allow time for pressure readings to stabilize. Record readings and repeat two more times. Measurements are good if they are within 1 percent of each other. Submit pressure readings to the Bridge Engineer for

review. Actual span weight shall not differ from the design weight by more than ± 5 percent.

If an adjustment needs to be made to the pivot girder elevation during this procedure, remove the existing spacer plate while jacking the span and replace with a single spacer plate machined to the required thickness.

820.09 CONSTRUCTION REQUIREMENTS FOR VERTICAL LIFT SPAN BRIDGES.

820.09.1 Construction of Approach Spans: Approach spans immediately adjacent to the movable span shall not be constructed until "Installation of Bearing Shoes," 820.09.10 has been completed. Each approach span must match the elevation and profile of the movable span across the entire width of the roadway to within ± 1/8 inch.

820.09.2 Tolerances for Lift Towers: For either concrete or steel tower vertical lift bridges, all lines, surfaces, corners, arises, and elements of the lift towers shall be within ± 1/4 inch in any 10 foot section and not more than ± 1/2 inch for the entire length of the tower for towers less than 100 feet and ± 3/4 inch for towers greater than 100 feet of the plan dimension.

For concrete lift towers, survey towers after each placement and before any further construction on that leg occurs. If at any point the tower does not meet the required tolerances, submit a contractor proposal with recommendations for remediation which may include removal and replacement of the tower.

For steel lift towers, survey towers continually during construction. If at any point during construction the tower does not meet the required tolerances, submit a contractor proposal with recommendations for remediation, which may include removal and re-fabrication of structural members.

820.09.3 Installation of Sheave Assemblies (Concrete Towers): Do not transport sheave assemblies to the project site until it is time to install them in their permanent locations on the sheave pedestals. Sheave assemblies shall come from the shop complete with trunnions, trunnion bearings, and sheave gear installed. Sheave gears shall come from the shop coated with a dry, rust-inhibiting grease. Do not remove this grease until installation of the pinion gear.

1. Installation of Anchor Bolts: Cast in place anchor bolts for the sheave pedestals with an embedded template as shown on the plans. Use survey equipment to locate templates horizontally and vertically. All four templates must be square to each other and at the same elevation ±1/2 inch. No individual anchor bolt can be located more than 1/2 inches from its specified location in all directions. Anchor bolts shall be vertical to within 0.5

degrees. Securely anchor template and monitor template locations while the concrete deck is placed and vibrated to assure no movement.

2. Installation of Sheave Pedestals: After both machinery decks have met the requirements for form removal, survey the elevations of all four sheave locations to determine the highest location. Place the first sheave pedestal at this location. Using the leveling screws provided, set the elevation of the top of the sheave pedestal to ±1/16 inch of the design elevation. Adjust pedestal elevation, if needed, to allow for a minimum 2-inch grout pad. Level pedestal in all directions with a machinist's level.

Install remaining three sheave pedestals, and adjust the elevations of these pedestals to match the elevation of the first pedestal. This should require these pedestals to have a grout pad greater than 2 inches. Level all pedestals with a machinist's level. The Project Engineer will verify all pedestal elevations. Submit elevations to the Bridge Engineer for review. All elevations shall be accurate to within ±1/16 inch.

Coat leveling screws with lubricant to prevent adhesion of grout. Form up and grout under the sheave pedestals as shown on the plans using a pre-packaged non-shrink epoxy grout with a minimum seven day compressive strength of 13,000 psi. Mix grout to be flowable and self-leveling. Install in accordance with the grout manufacturer's instructions to achieve 95 percent minimum bearing contact area with the base plate of the sheave pedestal. Pour grout from one side of the form to prevent air from being trapped under the sheave pedestal. Packing grout under sheave pedestal is not allowed. Allow grout to cure for a minimum of 48 hours or as recommended by the grout manufacturer before tightening anchor bolts and removing forms. Back off leveling screws and lock in place with jam nuts.

3. Alignment of Sheave Assemblies: Submit to the Bridge Engineer for review the means and methods for alignment and survey of sheaves. Place sheave assemblies on sheave pedestals. Use survey equipment to position sheave assemblies relative to specified control dimensions.

After positioning sheaves, but prior to installing turned bolts/fitted pins in the trunnion bearings, submit survey data to the Bridge Engineer for review. Submitted data shall show the following:

a. Sheaves on opposite towers are parallel and in the same plane.

b. Trunnions of sheaves on the same tower are aligned vertically and horizontally.

c. Sheaves on the same tower are the correct distance apart and the correct distance from the centerline of the bridge.

d. Sheaves on opposite towers are the correct distance apart and the correct distance from the centerline of the channel.

e. The diagonal distances between the sheaves are equal.

All distances shall be accurate to within ± 1/8 inch.

After review of the data, a representative of the EOR will schedule a site visit to verify sheave placement. Be prepared to demonstrate the submitted data with survey equipment and other measurement devices. After sheave placement has been verified, install turned bolts/fitted pins in trunnion bearings.

4. Determination of Maximum Gear Runout: Prior to installing the counterweight wire ropes, determine the maximum and minimum gear runout on each sheave. Record this data and submit to the Bridge Engineer for review. Mark the tooth with the maximum runout and lock the sheave such that the tooth with the maximum runout is aligned with the future placement of the pinion gear.

5. Clean Sheave Assemblies and Apply Touch-up Paint: Immediately after completing the installation of the sheave assemblies, clean sheave assemblies and pedestals, and touch up paint where damaged. Do not remove the protective grease from or paint the face of the sheave gear teeth.

820.09.4 Installation of Sheave Assemblies (Steel Towers): Use the same installation procedure as 820.09.3 "Installation of Sheave Assemblies (Concrete Towers)" except as follows:

1. Installation of Sheave Pedestals: Survey area of machinery deck where sheave pedestals will be located. Machinery deck plate steel must be flat to within ±1/16 inch in all locations under the pedestals. Project Engineer must verify flatness measurements. Install all four sheave pedestals.

Use survey equipment to determine the elevation of the top of each sheave pedestal. Project Engineer must verify elevation measurements. Calculate the thickness for a single spacer plate on each sheave pedestal (eight plates) to bring the sheave pedestal elevations to the design elevation. Submit shop drawings for the spacer plates to the Bridge Engineer for review. Shop drawings shall show current pedestal elevations. After completing the review process, fabricate and install spacer plates. Re-survey sheave pedestal elevations and submit the data to the Bridge Engineer for review. All final elevations shall be within ± 1/16 inch of the design elevations.

820.09.5 Construction of Counterweight (Vertical Lift): Construct the counterweights in accordance with the plans and 820.07.6, "Construction of Counterweight." Construct forms and place the

counterweight concrete. Remove forms after the counterweight has met requirements for form removal.

820.09.6 Installation of Counterweight Wire Ropes (Vertical Lift): At all times during the installation process, handle counterweight wire ropes (CWR's) in accordance with the wire rope manufacturer's recommendations. Kinks in the CWR's will be cause for rejection. Orient CWR's on the sheave as shown on the plans and without twisting.

1. Alignment of Counterweight Wire Ropes: After all CWR's have been placed on the sheave and attached to both the counterweight and the movable span lift girder, adjust threaded rods on the span sockets such that the tops of all shims are level, but not bearing on the steel frame as shown on the plans.

If sockets are painted, clean sockets and apply an additional top coat of paint to all sockets after completing installation.

Complete construction of the movable span including the concrete/grid roadway deck, sidewalks, and traffic barriers, and all mechanical items such as the span lock catches, buffers, and bearing feet.

2. Initial Tensioning of Counterweight Wire Ropes: Prepare and submit to the Bridge Engineer for review a method for measuring the tension in the wire ropes. Notify the Bridge Engineer 14 calendar days prior to tensioning of the CWR's so the EOR or a designated representative may be present. After the movable span is fully constructed, measure and adjust the tension in the CWR's until they are within ± 8 percent of each other.

Prepare a report describing the measurement method and all measurement data. Submit the report to the Bridge Engineer for review.

820.09.7 Installation of Span Drive Machinery and Pinion Gears. (Vertical Lift): Install the span drive machinery on the machinery deck as shown on the plans. All machinery shall be installed by a millwright and shall be aligned to within tolerances shown on the plans and industry standards for equipment of this type, whichever is more stringent. Do not begin to install span drive machinery until the movable span nears completion. Turned bolts/fitted pins for pinion shaft bearings shall not be installed until the sheave is fully loaded with the weight of the completed movable span and counterweight.

1. Installation of Span Drive Machinery: Sheaves should still be locked in position, and the sheave gear teeth with the maximum runout should still be in position to mate with the pinion gears. Without removing the protective grease on the pinion gear or the sheave gear that was applied in the shop, perform a preliminary alignment of the pinion gears. Locate and install

the span drive machinery base by aligning with the pinion shafts. Span drive machinery base and pillow block bearing supports shall be installed as shown on the plans, and in a similar method as the sheave pedestals. Install all span drive machinery. Fully lubricate all bearings, gearboxes, couplings, and seals.

2. Alignment of Pinion Gears: After the sheave has the full load of the completed movable span and counterweight, remove the protective grease from the pinion and sheave gears. Fully align the pinion gear so that the backlash is near the lower end of the range shown on the plans. Backlash at each end of a tooth shall be equal. Install undersized bolts, and use chock blocks as shown on the plans to fix the pinion bearings in place. Do not install turned bolts/fitted pins at this time.

Apply non-drying gear bluing compound to the entire sheave gear. Unlock sheave, rotate one full revolution, and inspect tooth contact. For acceptable gear contact, 80 percent of the teeth shall have 80 percent contact along the face of the teeth, and no teeth shall have less than 50 percent contact. If tooth contact does not meet this requirement, adjust pinion alignment and retest. Repeat until gear alignment meets both the backlash and tooth contact requirements.

Record all backlash measurements (all sheaves and both ends of the teeth) and take pictures of the tooth contact. Pictures shall show teeth with best contact and worst contact. Submit data to the Bridge Engineer for review.

3. Site Inspection to Check Pinion Gear Alignment: Provide a 14 calendar day notice to the Bridge Engineer to schedule a site inspection to verify pinion gear alignment. At site inspection, repeat tooth contact test on all four pinion gears and demonstrate backlash measurements with feeler gauges.

4. Installation of Turned Bolts/Fitted Pins: Once gear alignment has been verified, install turned bolts/fitted pins in the pinion bearings as shown on the plans.

5. Clean Sheave Assemblies, Paint, and Lubricate: After installing fitted pins, thoroughly clean entire sheave assembly, including all gear teeth and sheave pedestals. Complete the mechanical paint system. Do not paint the face of gear teeth. After the paint has dried, apply the specified gear grease to the sheave and pinion gears.

820.09.8 Weighing of Counterweight and Movable Span (Vertical Lift): After the turned bolts/fitted pins have been installed in the pinion bearings, use the following procedure to weigh the counterweight and the movable span or submit an alternate method to the Bridge Engineer for review. Notify the Bridge Engineer 14 calendar days prior to weighing the counterweight and the movable span so the EOR or a designated

representative may be present. Weighing of the counterweight and movable span shall be performed after construction of both is fully complete.

Submit cut sheets for hydraulic jacks and pressure gauges to the Bridge Engineer for review. Select jack size so that the expected load will register between 6,000 and 8,000 psi. Use 0-10,000 psi digital pressure gauges with an accuracy of ± 0.25 percent full scale. New gauges shall come with N.I.S.T. certification. Used gauges shall be newly certified.

1. Weigh Counterweight: Jack counterweight using the jacking frame shown on the plans. Use four identical hydraulic jacks with known bore sizes. Connect each pair of jacks to a separate power unit. Power units shall be capable of holding the load for the duration of the weighing process without leakage of hydraulic fluid. Each jack shall have its own pressure gauge, and the gauge should be mounted directly to the jack if possible. Otherwise, locate pressure gauges as close to the jacks as possible. Jacks shall be completely free of air before measurement.

Jack counterweight until all tension is removed from the counterweight wire ropes. Allow time for pressure readings to stabilize. Record readings and repeat two more times. Measurements are acceptable if they are within one percent of each other. Submit pressure readings to the Bridge Engineer for review.

2. Weigh Movable Span: Weigh the movable span with the counterweight suspended from the towers by the jacking rods. Place jacks at each corner of the movable span as shown on the plans. Use four identical hydraulic jacks with known bore sizes. Connect each jack to a separate power unit. Power units shall be capable of holding the load for the duration of the weighing process without leakage of hydraulic fluid. Each jack shall have its own pressure gauge, and the gauge should be mounted directly to the jack if possible. Otherwise, locate pressure gauges as close to the jacks as possible. Jacks must be completely free of air before measurement.

Jack all four corners of the movable span until there is a minimum of 1/4 inch of separation from the bearing shoes. All four corners must be jacked the same height. Allow time for pressure readings to stabilize. Record readings and repeat two more times. Measurements are acceptable if they are within one percent of each other. Submit pressure readings to the Bridge Engineer for review. Actual span weight shall not vary from the design weight by more than ± 5 percent.

820.09.9 Balance Movable Span (Vertical Lift): Using the weights measured for the movable span and the counterweight, adjust the balance blocks so that the movable span is 1,500 pounds span heavy per corner. This

is a starting point. Further adjustments to the span balance may need to be made to achieve proper performance. Maintain a record of all balance block adjustments.

820.09.10 Installation of Bearing Shoes (Vertical Lift): Lower the movable span so that the bearing feet contact the main piers. Mark location for bearing shoes on the main pier, and drill in place anchor bolts as shown on the plans. Use a template to space anchor bolts and to hold anchor bolts vertical. Using a non-shrink epoxy grout, form up and install grout pads under bearing shoes as shown on the plans, and in a similar manner as for the sheave pedestals, level bearing shoes with a machinist level. Bearing shoe elevations shall be accurate to within ± 1/16 inch. Entire length of bearing feet shall contact the bearing shoes. Grind bearing feet and repaint as required.

820.09.11 Installation of Span and Counterweight Guide Rails (Vertical Lift): Install span and counterweight guide rails as shown on the plans. Guide rails shall be vertical to within ± 1/8 inch along the entire length of the rail. Guide rail splices shall mate flush. Roller guides shall not ride on guide rails during operation when there is no wind.

820.09.12 Installation of Span Locks (Vertical Lift): Span lock catch shall have already been installed on the movable span. Locate span lock base and drill in place anchor bolts as shown on the plans. Use a template to space anchor bolts and to hold anchor bolts vertical. Using an epoxy grout from the Approved Materials List, form up and install grout pads under span lock bases as shown on the plans, and in a similar manner as the sheave pedestals. Level span lock bases with a machinist level. Span lock base elevations shall be accurate to within ± 1/16 inch. Locate span lock on base such that the center of the latch, when extended, is over the center of the catch when the latch is horizontal. Shim span lock so that there is a 1/16-inch gap between the latch and the catch when the latch is extended. Adjust limit switches so that the span lock latch is fully inside the enclosure when retracted and horizontal when extended.

820.09.13 Installation of Air Buffers (Vertical Lift): Install air buffers as shown on the plans and thoroughly lubricate. Provide air pressure gauges (0-300psi) and install in place of the oilers. Operate span and adjust air valves until the span seats gently and all buffers see approximately the same maximum pressure. This should be between 75 and 100 psi. Be prepared to demonstrate pressure settings during final setup and inspection, and have personnel and tools available to make additional adjustments at that time. After air buffer operation has been accepted, match mark the air valve position and install oilers.

820.10 CONSTRUCTION REQUIREMENTS FOR BASCULE SPAN BRIDGES.

820.10.1 Construction of Approach Spans: Approach spans immediately adjacent to the movable span shall not be constructed until construction of the movable spans is completed. Each approach span must match the elevation and profile of the movable span across the entire width of the roadway to within ± 1/8 inch.

820.10.2 Alignment of Span Trunnion Bearings (Bascule): Span trunnion bearing supports must have a surface flatness of 0.010 inches under the entire footprint of the span trunnion bearing housing and must be level to the accuracy of a machinist's level. Field machine, if necessary, to meet these requirements. Shim the span trunnion bearings to the design elevations and align using a piano wire, laser, or other approved method.

820.10.3 Alignment of Movable Span(s) (Bascule): Hold trusses or girders of bascule span(s) erected in the open position to the correct alignment by the use of struts, braces, guy-wires or other approved methods. Drilling and reaming of bolt holes for lateral bracing may be performed after lowering the bascule span(s) to allow adjustment of alignment in the closed position. For double leaf bascule spans, the two spans must be aligned to within the allowable tolerances of the span locks in the closed position, and the two spans must match the elevation and profile of each other across the entire width of the roadway to within ± 1/8 inch. Do not install the turned bolts/fitted pins in the span trunnion bearings until alignment of the bascule span(s) in the open and closed positions has been verified.

820.10.4 Balancing of the Movable Span (Bascule): Use the strain gauge balancing method to balance the movable span(s). Adjust balance blocks to achieve a balance condition of 3,000 pounds "toe" or "tip" heavy in the closed position and neutral in the open position.

820.11 MEASUREMENT. Except as defined below, measurement for movable bridge components shall be made in accordance with its respective Section.

Measurement includes all equipment, materials, labor, tools, and incidentals necessary to complete this item.

1. Temporary Operation and Maintenance of Movable Span: Operation and maintenance of the movable span during construction will be measured on a lump sum or per day basis. A billable day is when the bridge is operated for more than twelve hours.

2. Weighing and Balancing of Movable Span: Weighing and balancing of the Movable Span will be measured on a lump sum basis.

3. Final Setup and Field Testing: Final setup and field testing will be measured on a lump sum basis.

4. Training: Training of bridge operators and maintenance personnel will be measured on a lump sum basis.

5. Manuals: Preparing and submitting manuals will not be measured for payment. The cost is to be included in the mechanical, electrical, and facility items shown on the plans.

820.12 PAYMENT. Payment will be made at the Contract unit price which includes all equipment, materials, labor, tools, and incidentals necessary to complete the item.

Cost of preparing and submitting the manuals shall be included in the pay items of Sections of 821, 822, and 823. The Department will withhold 5 percent of the bid price of all mechanical, electrical, and facility items (821, 822, and 823 items) until all manuals have been reviewed and accepted, and final paper reproductions have been received by the Department.

Payment will be made under:

Item No.	Pay Item	Pay Unit
820-01	Temporary Operation & Maintenance of Movable Span	Lump Sum
820-02	Temporary Operation & Maintenance of Movable Span	Day
820-03	Weighing and Balancing of Movable Span	Lump Sum
820-04	Final Setup and Field Testing	Lump Sum
820-05	Training	Lump Sum

Section 821
Mechanical Systems

821.01 DESCRIPTION. Provide all material, equipment, tools, measuring devices, and labor to purchase/fabricate, shop test, transport, install/erect, align/adjust, paint, lubricate, field test, and set-up all Mechanical Items/Systems as specified herein.

These specification govern both new construction projects and rehabilitation/ repair projects.

821.02 ACRONYMS AND ABBREVIATIONS. See 101.02 and 801.02 for additional acronyms and abbreviations.

ASJ	All Service Jacket
BOD	Biological Oxygen Demand
BTU	British Thermal Unit
CFM	Cubic Feet per Minute
CMU	Concrete Masonry Unit
CWP	Cold Working Pressure
GPM	Gallons per Minute
EPDM	Ethylene Propylene Diene Monomer
EEIPS	Double Extra Improved Plow Steel
EIPS	Extra Improved Plow Steel
FKM	Fluorocarbon Elastomer
FSK	Foil-Scrim Kraft
HFC	Hard Fiber Core
HPU	Hydraulic Power Unit
HVAC	Heating, Ventilation, and Air Conditioning
IWRC	Independent Wire Rope Core
MDFT	Minimum Dry Film Thickness
MERV	Minimum Efficiency Reporting Value
NIST	National Institute of Standards and Technology
NPS	Nominal Pipe Size
NRTL	Nationally Recognized Testing Laboratories
PE	Polyethylene
PVC	Polyvinyl Chloride
PVDF	Polyvinylidene Diflouride
RPM	Revolutions Per Minute

SBS	Styrene-Butadiene-Styrene
TEFC	Totally Enclosed Fan Cooled
TENV	Totally Enclosed Non-Ventilated
UNC	Unified National Coarse
VOC	Volatile Organic Compound

821.03 DEFINITIONS. See 101.03, 801.03, 820.03, and 822.03 for additional definitions.

ACR Tubing. Air-conditioning and refrigeration field service copper tubing.

Bright Wire Rope. Wire rope with no coatings.

Center Wires. Wires positioned at the center of a strand in a wire rope. See ASTM A1023, 3.6.4.1

Counterweight Ropes for Movable Barriers. Wire ropes that connect the movable barrier to the counterweight. Consists of a specified length of wire rope with sockets permanently attached at each end.

Counterweight Ropes for Vertical Lift Bridges. Wire ropes that connect the movable span of a vertical lift bridge to the counterweight. It consists of a specified length of wire rope with sockets permanently attached at each end.

Drawn-Galvanized Wire. Zinc coating applied prior to the final cold drawing operation of a wire. See ASTM A1007, 3.1.3.

Escutcheon. An escutcheon is a plate or ring formed to cover a gap between a penetrating pipe or valve and the finished wall surface from which it protrudes.

Filler Wires. Smaller, non-load bearing wires in a wire rope. Provides support for subsequent layers of wires. See ASTM A1023, 3.6.2.1.

Final-Galvanized Wire. Zinc coating applied after the final cold drawing operation of a wire that is galvanized at the final size of the wire. See ASTM A1007, 3.1.6.

Fitted Pin. Used for turned bolts larger than 1 1/2 inch diameter. A fabricated fastener that is threaded on both ends and whose shank is machined to a high tolerance to provide a tight (LC6) fit with the hole.

Fluorocarbon Elastomer (FKM). Shaft and O-ring seal material. When available, all shaft and O-ring seals shall be 100 percent FKM in accordance with ASTM D1418, (trade name "Viton").

Flux. A strong cleaning agent which cleans oxidized copper.

Galvanized. Unless otherwise specified, all galvanizing shall be hot dipped in accordance with ASTM A123.

Hydronic. Hydronic is the use of water as the heat-transfer medium in heating and cooling systems.

Inner Wires. All wires except filler wires, center wires, core wires, and outer wires in a wire rope. See ASTM A1023, 3.6.4.3.

Main Wires. Load bearing wires in a wire rope. See ASTM A1023, 3.6.2.2.

Marine Duty Stainless Steel. Any of the following stainless steel types: 201, 202, 205, 301, 302, 302B, 304, 304H, 304L, 304N, 305, 308, 309, 309S, 310, 310S, 314, 316, 316F, 316H, 316L, 316N, 317, 317L, 321, 321H, 329, 330, 347, 347H, 348, 348H, 384, 434, 436, 446, 431, 15-5 PH, 17-4 PH, 17-7 PH.

Operating Ropes. Wire ropes that are part of the drive system of a movable bridge or a movable barrier.

Outer Wires. All wires in the outer layer of the outer strand of a wire rope. See ASTM A1023, 3.6.4.4

Prestretching. A process for stretching a wire rope prior to measuring so that a more accurate measurement can be made. See ASTM A1023, 3.10.

Production Length. A length of wire rope that is manufactured in one continuous operation from one setting of one stranding machine and one setting of one closing machine. See ASTM A1023, 8.3.

Rope Core. Central element of a wire rope that supports the strands. See ASTM A1023, 3.3, 3.3.1, 3.3.2.

Rope Lay. Describes both the direction of the twist of the wires in a strand of a wire rope, and the direction that the strands are laid in a wire rope. See ASTM A1023, 3.16.

Sockets. Steel fittings permanently attached to the end of a wire rope to facilitate connection to a structure.

Strand. An assembly of main wires and filler wires. Multiple strands are used to fabricate a wire rope. See ASTM A1023, 3.4

Turned Bolt. A bolt where the shank has been machined to a high tolerance to provide a tight (LC6) fit with the hole. See also Fitted Pin.

US26D. Door hardware finish specification. Satin chromium plated; brushed/satin chrome. Brass or bronze base material.

US32D. Door hardware finish specification. Satin stainless steel; brushed/satin stainless.

821.04 MATERIALS. All material for fabricated items shall be new and all manufactured items shall be new. Comply with the following Sections.

Fences	705
Jacked or Bored Pipe	728
Structural Metals	807
Painting and Protective Coatings	811
Welding	809
Electrical Systems	822
Facilities	823
Metals	1013
Epoxy Resin System	1017

821.05 GENERAL REQUIREMENTS.

821.05.1 Federal, State, and Local Codes and Laws: Provide all Mechanical Work in accordance with, but not limited to, the following federal laws, and codes adopted by the State of Louisiana to govern the construction of mechanical items/systems. Use code editions that are in effect at the time the Contract is executed.

ADA-AG	Americans with Disabilities Act – Accessibility Guidelines
IBC	International Building Code
IMC	International Mechanical Code
LSPC	Louisiana State Plumbing Code
LSAC	Louisiana Sanitary Code
NFPA 54	National Fire Protection Association – Natural Fuel Gas Code (NFGC)
NFPA 58	National Fire Protection Association – Liquefied Petroleum Gas Code (LPG)
NFPA 70	National Fire Protection Association – National Electrical Code (NEC)
NFPA 72	National Fire Protection Association – National Fire Alarm and Signaling Code
NFPA 90A	National Fire Protection Association – Standard for the Installation of Air-Conditioning and Ventilating Systems
NFPA 90B	National Fire Protection Association – Standard for the Installation of Warm Air Heating and Air-Conditioning Systems
NFPA 101	National Fire Protection Association – Life Safety Code (LSC)
OSHA	Occupational Safety and Health Administration

In addition, provide all mechanical work in accordance with all local building, mechanical, electrical, and sanitary code ordinances in force in the work locality except that local inspection of utilities will not be required unless ownership of the work will be transferred to the local utility.

Providing mechanical work in accordance with Federal, State, and local codes, laws, and ordinances is a minimum requirement. Work specified in the Contract that is more stringent than that required by the Federal, State, and local codes, laws, and ordinances shall also be provided. Work that does not meet the requirements of the Federal, State, and local codes, laws, and

ordinances, and/or the Contract documents shall be corrected at no additional cost or time to the Department.

For projects with federal funding, all mechanical equipment containing steel may require conformance with applicable provisions of the federal Buy America Act 49 U.S.C. § 5323(j). This includes roller bearings, electric motors, brakes, couplings, hydraulic cylinders, hydraulic valves, etc. If there are no domestic suppliers of equipment that will meet the contract specifications, the Contractor must submit a request to the Department to apply for a waiver to use the foreign made product. The request must provide evidence that the product is not available domestically. In addition, if there is only one domestic supplier of equipment that will meet the contract specifications, and the cost of a foreign supplied product is substantially lower, the Contractor can submit a request to the Department to apply for a waiver to use the foreign made product. The request must provide evidence of the cost difference.

821.05.2 Specifications and Standards: Mechanical work shall be in accordance with, but not limited to, the following specifications and standards that govern the construction of the mechanical items/systems specified in the Contract.

AA	Aluminum Association
AABC	Associated Air Balance Council
AAMA	American Architectural Manufacturers Association
AASHTO	American Association of State Highway Transportation Officials • LRFD Bridge Design Specifications • LRFD Movable Highway Bridge Design Specifications
AIA	American Institute of Architects
AGMA	American Gear Manufacturers Association
AMCA	Air Movement and Control Association International
AISC	American Institute of Steel Construction
AISI	American Iron and Steel Institute
ANSI	American National Standards Institute
ARI	American Refrigeration Institute
ASCE	American Society of Civil Engineers
ASHRAE	American Society of Heating, Refrigerating, and Air-Conditioning Engineers

ASME	ASME International (American Society of Mechanical Engineers)
APWA	American Public Works Association
ASSE	American Society of Safety Engineers
ASTM	ASTM International (American Society for Testing and Materials International)
AWG	American Wire Gauge
AWPA	American Wood Protection Association
AWS	American Welding Society
AWWA	American Water Works Association
BHMA	Builders Hardware Manufacturers Association
CSA	CSA International
FMG	Factory Mutual Global
HI	Hydraulic Institute
IAPMO	International Association of Plumbing and Mechanical Officials
IESNA	Illuminating Engineering Society of North America
MSS	Manufacturers Standardization Society
NEBB	National Environmental Balancing Bureau
NEMA	National Electrical Manufacturers Association
NFRC	National Fenestration Rating Association
NRCA	National Roofing Contractors Association
NSF	NSF International (National Sanitation Foundation International)
SAE	SAE International (Society of Automotive Engineers International)
SDI	Steel Door Institute
SMACNA	Sheet Metal and Air Conditioning Contractors' National Association
SSPC	Society for Protective Coatings
UL	Underwriter's Laboratories

Providing mechanical work in accordance with these Specifications and Standards is a minimum requirement. Work specified in the Contract that is more stringent than that required by these Specifications and Standards shall also be provided. Work that does not meet the requirements of these Standards and Specifications and/or the Contract documents shall be corrected at no additional cost or time to the Department.

821.05.3 Workmanship: Use best industry practices at all times during the fabrication, transportation, installation, alignment, adjustment, and testing of the mechanical items/systems specified in the Contract.

821.05.4 Personnel Qualifications: Provide construction personnel who are knowledgeable and experienced in the construction/installation of mechanical items/systems shown in the Contract. Although the contract documents are of sufficient detail and quality to convey the intent of the design to an experienced contractor, they do not necessarily depict every detail or specify every incidental or ancillary item that is required for the mechanical systems to be properly fabricated, transported, installed, aligned, adjusted, tested, painted, and to function in accordance with the intent of the contract documents.

Regardless of the construction cost, all general contractors and subcontractors shall be licensed in Louisiana for the work they are performing.

821.06 MECHANICAL SYSTEM SUBMITTALS

821.06.1 General Requirements: Prepare and submit original mechanical submittals to the Bridge Engineer for review for each mechanical item as described below.

Mechanical system submittals shall comply with Sections 105.02.2, 801.05, and 820.06. They include shop drawings, cut sheets, field measurements, calculations, manuals, and any other document that the contractor is required by the Contract to produce and submit to the Bridge Engineer for review or record.

The mechanical system submittal process creates an official record of the mechanical work performed on the project, how mechanical items were installed, and required construction measurements, settings, and calculations. It also allows the Department to take exception to a mechanical item that is in conflict with the requirements of the Contract, or to correct a plan error prior to the purchase or fabrication of a mechanical item when the cost is at a minimum.

Submittals related to a given mechanical assembly, such as Detail Sheets 821.06.2(1), Assembly Sheets 821.06.2(2), Cut Sheets 821.06.3, etc., shall be submitted together in one package. The review period for these submittals will not begin until all documents have been received by the Department.

Always copy the Project Engineer whenever transmitting mechanical system submittals.

821.06.2 Mechanical Shop Drawings: Prepare and submit original mechanical shop drawings to the Bridge Engineer for review for each shop fabricated and manufactured mechanical item.

Mechanical shop drawings shall be prepared by, or under the direct supervision of, the shop that will perform the work. Mechanical shop drawings shall not be prepared by an independent entity, and given to the shop for use in fabrication. Contract plan sheets shall not be used for mechanical shop drawings.

1. Detail Sheets: Prepare and submit detail sheets for each shop fabricated mechanical item. Detail sheets shall show all views, dimensions, tolerances, fits, finishes, welds, materials, heat treatment, hardness requirements, etc. required to fabricate an individual item. For weldments, show steel plate sizes prior to machining. Include estimated weight of each fabricated Item.

2. Assembly Sheets: Prepare and submit assembly sheets for all mechanical assemblies. Assembly sheets shall show how groups of mechanical parts, both fabricated and manufactured, are to be assembled together, and where the mechanical assemblies are located on the project.

All manufactured items such as motors, speed reducers, bearings, electrical equipment, hydraulic equipment, etc., and their pertinent data shall be shown on assembly sheets. Pertinent data includes dimensions related to the assembly, weights, pressure ratings, capacities, normal operating settings, lubrication fitting types, manufacturer's recommended lubricant, frequency of lubrication, etc. Obtain dimensions of all manufactured equipment from certified drawings provided by the manufacturer prior to the production of shop drawings. Submit certified drawings with related assembly sheets.

If any manufactured item must be modified from the way it is normally delivered by the manufacturer, provide a detail of the modification on the related assembly sheet. If the modification was made by the manufacturer, provide a unique part number from the manufacturer such that when a replacement part is ordered, it will have the same modifications.

3. Submittal Procedure: Submit mechanical shop drawings electronically to the Bridge Engineer for review. The electronic file shall be a single PDF file for each mechanical assembly.

For bidding purposes, allow a review period of 14 calendar days per submittal if the submittal consists of 30 or less shop drawing sheets. For submittals containing more than 30 shop drawing sheets, allow a review period of 14 calendar days per 30 sheets submitted rounded up (40 sheets equals 28 calendar days). Review periods for separate submittals are not concurrent.

After review, rejected shop drawings will be stamped "Returned for Correction," will be initialed and dated by the reviewer, will have comments marked in red, and will be returned to the contractor electronically as a PDF file. Correct errors and mark changes by placing a cloud shaped outline around each change. Note changes in the revision block. Resubmit electronically to the Bridge Engineer for review. Any submittal with unmarked or unnoted changes will be returned without review. This process will repeat until the Department has no further comments. Mechanical shop drawings will then be stamped "Accepted in accordance with LSSRB 105.02," initialed and dated by the reviewer, and returned to the contractor electronically as a PDF file.

4. Deliverables: Provide three full scale paper reproductions and one half scale paper reproduction of all mechanical shop drawings that have been stamped "Accepted in accordance with LSSRB 105.02" to the Bridge Engineer for distribution. Paper reproductions shall be printed directly from the PDF file returned by the Department, shall show the "Accepted in accordance with LSSRB 105.02" stamp, and shall have no modifications.

821.06.3 Mechanical Cut Sheets (Manufacturer Information Sheets): Prepare and submit mechanical cut sheets to the Bridge Engineer for review for each manufactured mechanical Item.

Mechanical cut sheets shall be of good legible quality. Poor legible quality can be reason for rejection.

Stamp each sheet of each mechanical cut sheet submittal with the project name, project number, parish name, contract item number, shop drawing item number (if different), contract sheet number, and shop drawing sheet number (if different). Include the manufacturer's name if not already shown on the mechanical cut sheet. If multiple sheets are related to one item, then note each sheet with X of Y where X is the sheet number and Y is the total number of sheets.

Indicate pertinent sizes, ratings, features, or any other data (voltage, gpm, etc.) specified on the plans on the mechanical cut sheet with an arrow or other such mark. Do not use highlight markers because they do not photocopy well.

Cross out items on mechanical cut sheets that are not being submitted for review.

Include the manufactured item's warranty information if the warranty extends beyond the Contractor's guarantee period. Always include documentation for extended warranties that were required to be purchased for the Contract. Extended warranties shall be in the Department's name.

1. Submittal Procedure: Submit mechanical cut sheets electronically to the Bridge Engineer for review. The electronic file shall be a single PDF file.

For bidding purposes, allow a review period of 14 calendar days per submittal if the submittal consists of 50 or less mechanical cut sheets. For submittals containing more than 50 mechanical cut sheets, allow a review period of 14 calendar days per 50 sheets submitted rounded up (60 sheets equals 28 calendar days). Review periods for separate submittals are not concurrent.

After review, rejected mechanical cut sheets will be stamped "Returned for Correction," will be initialed and dated by the reviewer, will have comments marked in red, and will be returned to the contractor electronically as a PDF file. Correct errors and resubmit electronically to the Bridge Engineer for review. This process will repeat until the Department has no further comments. Mechanical cut sheets will then be stamped "Accepted in accordance with LSSRB 105.02," initialed and dated by the reviewer, and returned to the contractor electronically as a PDF file.

2. Deliverables: No paper reproductions of mechanical cut sheets are required. The Department will distribute "Accepted in accordance with LSSRB 105.02" mechanical cut sheets to all interested parties electronically as a PDF file.

821.06.4 Color and Material Samples: Prepare and submit color and material samples to the Bridge Engineer for review as indicated on the plans.

Color samples shall be printed hard copies by the item's manufacturer or color samples of the item itself (e.g., floor tiles of various colors). Electronic submittals of color samples are not allowed.

821.06.5 Mechanical Record Drawings: Mechanical record drawings shall become part of the final estimate package and submitted for archiving. They shall consist of the following:

1. Original, full size, mechanical contract plan sheets and change order sheets.
2. All reviewed and stamped mechanical shop drawings.
3. Any mechanical contract plan sheets (full scale) that have been marked to indicate construction changes ("As Built" sheets). These sheets shall have the Project Engineer's signature certifying that the changes are accurate.

821.06.6 Mechanical Operation and Maintenance Manual: For any project with mechanical ("M") sheets, prepare and submit a mechanical operation and maintenance manual to the Bridge Engineer for review.

Cost of preparing and submitting the Mechanical Operation and Maintenance Manual shall be included in the pay items of Sections 821, 822, and 823. The Department will retain 5 percent of the bid price of all mechanical, electrical, and facility items (821, 822, and 823 items) until the manual has been reviewed and accepted, and final paper reproductions have been received by the Department.

All sheets included in the manual must be of good legible print quality. Poor legible quality can be reason for rejection. Any sheets with color must be scanned/printed in color.

Include a title sheet showing "Louisiana Department of Transportation and Development," "Mechanical Operation and Maintenance Manual," the project name, project number, parish name, the year the project was completed, the name of the contractor, and the contractor's contact information.

Include a "Contract Plans" section that contains all original mechanical contract plan sheets and change order sheets. Scan at high quality from the full scale original and format for printing at 11 inches x 17 inches.

Include a "Shop Drawings" section that contains all mechanical shop drawing sheets. Generate from the original PDF files reviewed by the Department with the "Accepted in accordance with LSSRB 105.02" stamp, the reviewer's initials, and the date of the review. Format for printing at 11 inches x 17 inches.

Include a "Cut Sheets" section that contains all mechanical cut sheets. Generate from the original PDF files reviewed by the Department with the "Accepted in accordance with LSSRB 105.02" stamp, the reviewer's initials, and the date of the review.

Include an "As Built" section that contains all mechanical "As Built" sheets. Scan at high quality from the full scale original and format for printing at 11 inches x 17 inches.

For movable bridge projects, include a "Lubrication Plan and Equipment Settings" section that contains the "Lubrication Plan and Equipment Settings" drawings from 820.06.1. Generate from the original PDF files reviewed by the Department with the "Accepted in accordance with LSSRB 105.02" stamp, date, and reviewer's initials. Format for printing at 11 inches x 17 inches.

Include a "Warranties" section that contains all warranty information for all manufactured Items. Generate from the original PDF files reviewed by the Department with the "Accepted in accordance with LSSRB 105.02" stamp, the reviewer's initials, and the date of the review.

1. Submittal Procedure: Submit the mechanical operation and maintenance manual electronically to the Bridge Engineer for review. The

electronic file shall be a single PDF file, and shall be organized and formatted to present itself as a finished maintenance manual. For bidding purposes, allow a review period of 21 calendar days.

The entire maintenance manual will be considered one item. Only the title sheet shall be stamped "Returned for Corrections" or "Accepted in accordance with LSSRB 105.02."

If the maintenance manual is rejected after review, the title sheet will be stamped "Returned for Corrections," will be initialed and dated by the reviewer, will have comments marked in red, and will be returned electronically. Correct errors and resubmit electronically to the Bridge Engineer for review. This process will repeat until the Department has no further comments. The title sheet will then be stamped "Accepted in accordance with LSSRB 105.02," initialed and dated by the reviewer, and distributed electronically by the Department.

2. Deliverables: After the electronic submittal process has been completed, provide two paper reproductions of the mechanical operation and maintenance manual to the Bridge Engineer for review. For bidding purposes, allow a review period of 14 calendar days.

Format shall be in accordance with "Paper Reproductions" and "Letter Size Sheets" from 801.05.2.2.

Provide each manual with a white, premium, heavy duty, 3 D-ring binder with title sleeve. Binders shall be appropriately sized to hold enclosed material, and shall be extra wide to accommodate sheet protectors. Binders shall not be larger than 3 inches. Use multiple binders if necessary.

Provide each sheet with a top loading, 8 ½ inches x 11 inches, standard weight, clear, sheet protector. Fold half-scale sheets in half with printed material facing out, and insert in sheet protectors.

Provide a top loading, 8 ½ inches x 11 inches, standard weight, clear, tab index sheet protector with labeled tab to delineate sections.

If the paper reproduction of the manual is rejected after review, the title sheet of both copies will be stamped "Returned for Correction," will be initialed and dated by the reviewer, and both copies will be returned to the contractor with instructions for corrections. Correct errors and resubmit to the Bridge Engineer for review. This process will repeat until the Department has no further comments. The title sheet will then be stamped "Accepted in accordance with LSSRB 105.02," initialed and dated by the reviewer, and distributed by the Department.

821.07 GENERAL CONSTRUCTION REQUIREMENTS FOR MOVABLE BRIDGES

821.07.1 Fabrication Standards: Fabrication of parts shall conform to all standards shown in 821.05.2.

821.07.2 Burrs and Sharp Edges: Remove all burrs and break all sharp edges of fabricated parts.

821.07.3 Finished Mating Surfaces: Finished surfaces that mate with or slide on other finished surfaces shall have a 125 finish or as shown on the plans.

Immediately after fabrication, coat the surface with NO-OX-ID "A-Special" rust preventative or an approved equal to prevent corrosion.

Protect with wooden lagging or some other approved method for transportation to the field.

821.07.4 Unfinished Surfaces and Finished Non-Mating Surfaces: Paint all unfinished surfaces and finished surfaces that do not mate with other finished surfaces in accordance with Section 811.

821.07.5 Fits and Finishes: If not shown on the plans, or specified elsewhere herein, fits and finishes shall be in accordance with Table 821-1.

Table 821-1

Fits and Finishes for Common Mating Parts[1]		
Part	**Fit**	**Finish µin**
General Machinery Parts in Fixed Contact	—	125
Machinery Base in Fixed Contact with Machinery Parts	—	125
Machinery Base on Steel	—	250
Machinery Base on Masonry	—	500
Shaft Journals	RC6	8
Journal Bushings	RC6	16
Split Bushings in Base	LC1	125
Solid Bushing in Base (≤ 0.25 inch wall)	FN1	63
Solid Bushing in Base (> 0.25 inch wall)	FN2	63
Hubs on Shafts (≤ 2 inch bore)	FN2	32
Hubs on Shafts (> 2 inch bore)	FN2	63
Hubs on Main Trunnions	FN2	63
Fitted Pins in Finished Holes	LC6	63
Sliding Bearings	RC6	32
Center Pivot Disk Bearing Sliding Surfaces (Bronze and Steel Disks)	—	32
Keys and Keyways		
Top and Bottom	LC4	63
Sides (Load Transmitting)	FN2	63
Sides (Non-load Transmitting)	LC4	63
Teeth of Open Spur Gears		
Over 3 Diametral Pitch	—	32
3 - 1.75 Diametral Pitch	—	63
Under 1.75 Diametral Pitch	—	125

[1]ANSI B4.1, Fits, and ANSI B46.1, Finishes, can be found in the current edition of the Machinery's Handbook.
Surface finishes are given as the arithmetic average roughness height in µin.

821.07.6 Dimensional Tolerances: If not shown on the plans, or specified elsewhere herein, dimensional tolerances for fabricated parts shall be as follows:

Integers and Fractions: ……..	± 0.03	inch
X.XX": ……...	± 0.01	inch
X.XXX": ……	± 0.005	inch
Angles: ……...	±0.5	degrees

821.07.7 Shop Storage: Store all fabricated/manufactured mechanical parts/equipment out of the weather while at the shop.

821.07.8 Stainless Steel Bolts: Unless otherwise specified on the plans, all standard bolts used with mechanical parts/equipment shall be stainless steel in accordance with the following.

1. Material: ASTM F593, Type 304 or 316, alloy groups 1 or 2, Condition CW, minimum tensile strength of 80 ksi, and minimum yield strength of 40 ksi.
2. Head: Hex head as specified in ANSI B18.2.1.
3. Threads: UNC as specified in ANSI/ASME B1.1, Class 2A tolerances.
4. Nut: ASTM F594 with a minimum proof stress equal to or greater than the bolt, and the same alloy group as the bolt. Hex head as specified in ANSI B18.2.2. One required per bolt.
5. Flat Washers: Type 304 or 316 stainless steel with a minimum tensile strength of 80 ksi and minimum yield strength of 40 ksi. For standard size holes, use American Standard Type A, narrow series. For oversized holes, use American Standard Type A, wide series. Two required per bolt, one under the head and one under the nut.
6. Beveled Washers: Fabricate from the same material as the flat washers. Bolt heads and nuts shall bear flat on the materials being fastened. Beveled washers shall be used where bearing faces on either the head or nut of the bolt have a slope of more than 1:20.
7. Bolt Holes: For shank diameters less than 1/2 inch, hole diameters shall be 1/32 inch larger than the shank diameter. For shank diameters greater than or equal to 1/2 inch, hole diameters shall be 1/16 inch larger than the shank diameter. Where oversized holes are permitted, double these allowances.

Bolt holes shall be drilled, or sub-drilled and reamed in either the shop or the field and shall be cylindrical and perpendicular to the materials being fastened. Diameters shall be accurate to within 0.01 inch. Where practical,

direct drills and reamers by mechanical means. If materials being fastened do not mate flush, draw firmly together prior to drilling/reaming. Poor matching holes will be cause for rejection. After drilling/reaming, grind bolt holes free of sharp edges or burrs. Burned holes are not allowed.

8. Handling: Carefully pack bolts and their matching accessories (nuts and washers) together in a water tight, resealable container by the shop in a manner that prevents damage during shipping. Clearly and permanently label the container to identify the material, type, size, and length of the enclosed bolts, nuts, and washers. In the field, store the container out of the weather, and do not open until ready to install the bolts. Only remove from storage the number of fasteners that will be installed during a work shift.

9. Installation: Locate one flat washer under the head, and one flat washer under the nut. Torque the nut in accordance with Table 821-2. Threads shall be clean, but not lubricated. Bolts so torqued may be reused as long as there is no visible elongation or deformation of the bolt or threads. Use only properly fitting wrenches or sockets to tighten nuts.

Table 821-2

Torque Table for Stainless Steel Bolts **ASTM F593 - 80 ksi Tensile, 40 ksi Yield** Threads should be clean, but not lubricated			
Bolt Diameter (inch)	**Torque (ft-lbs)**	**Bolt Diameter (inch)**	**Torque (ft-lbs)**
1/4	3	3/4	86
5/16	5	7/8	145
3/8	10	1	215
7/16	16	1 1/8	300
1/2	24	1 1/4	430
9/16	35	1 3/8	560
5/8	48	1 1/2	750

821.07.9 High Strength Bolts: When specified for use on mechanical equipment, high strength bolts shall meet all requirements of Sections 807 and 1013.

821.07.10 High Strength Anchor Bolts: When specified for use on mechanical equipment, high strength anchor bolts shall meet all requirements of Sections 807 and 1013.

821.07.11 High Strength Stainless Steel Anchor Bolts: When specified for use on mechanical equipment, cast-in-place and drilled-in-place high strength stainless steel anchor bolts shall comply with the following.

1. Material: Bolts less than or equal to 1-1/2 inches diameter, use ASTM F593, alloy group 7, condition AH, minimum tensile strength 135 ksi, minimum yield strength 105 ksi. Bolts larger than 1-1/2 inches diameter, use ASTM A564, Type 630, Condition H1150, 135 ksi minimum tensile strength, 105 ksi minimum yield strength.

2. Head: Anchor bolts less than or equal to 1-1/2 inches diameter shall have hex heads as specified in ANSI B18.2.1. Anchor bolts greater than 1-1/2 inches diameter will not have a head. They shall be fabricated from bar stock and threaded on each end as shown on the plans.

3. Threads: UNC as specified in ANSI/ASME B1.1, class 2A tolerances.

4. Nuts: Bolts less than or equal to 1-1/2 inches diameter, use ASTM F594 nut with a minimum proof stress equal to or greater than the bolt, and the same alloy group as the bolt. Hex head as specified in ANSI B18.2.2. One required per bolt. Bolts greater than 1-1/2 inches diameter, fabricate from same material as the anchor bolt. Use heavy hex dimensions as specified in ANSI B18.2.2. Threads shall have Class 2B tolerances. Two nuts required with each anchor bolt.

5. Flat Washers: Fabricate from same material as the anchor bolt. Use dimensions for American Standard Type A, narrow series washers. One required for each anchor bolt.

6. Beveled Washers: Fabricate from same material as the anchor bolt. Nuts shall bear flat on the materials being fastened. Beveled washers shall be used where bearing faces under the nut have a slope of more than 1:20.

7. Bolt Holes: Hole diameters shall be 1/16 inch larger than the shank diameter.

8. Packaging/Shipping/Storage: Provide resealable water tight containers for shipping and storage. Pack anchor bolts in containers in a manner that prevents damage during shipping. Clearly and permanently label container to identify the contents and reference the contents with the plans. Store the container out of the weather at the project site.

9. Installation: Locate anchor bolts for mechanical equipment with an anchor bolt template in accordance with 821.07.10. Torque nut in accordance with Table 821-3. Threads shall be cleaned, but not lubricated. Anchor bolts so torqued may be reused as long as there is no visible elongation or deformation of the bolt or threads. Use only properly fitting wrenches or sockets to tighten nuts.

821.07.12 High Strength Stainless Steel Turned Bolts and Fitted Pins: For applications less than or equal to 1-1/2 inches diameter, fabricate turned bolts from bolt blanks in accordance with the plans and the following specifications. For applications greater than 1-1/2 inches diameter, fabricate fitted pins from bar stock and thread at both ends in accordance with the plans and the following specifications.

1. Material: For diameters less than or equal to 1-1/2 inches, fabricate turned bolts from ASTM F593 bolt blanks, alloy group 7, condition AH, min. tensile strength 135 ksi, min. yield strength 105 ksi. For diameters greater than 1 1/2", fabricate fitted pins from ASTM A564, Type 630, Condition H1150, 135 ksi min. tensile strength, 105 ksi min. yield strength.

2. Shank Dimensions/Tolerances: Nominal shank diameters shall be as shown on the plans. Shanks shall be straight to within 0.005 inch per inch of length, shall have a surface finish of ANSI 63 µin or better, and shall have an LC6 fit with the bolt/pin hole based on the nominal diameter.

3. Head: For diameters less than or equal to 1-1/2 inches, turned bolts shall have hex heads as specified in ANSI B18.2.1.

4. Threads: UNC as specified in ANSI/ASME B1.1, Class 2A tolerances. Threads shall not extend into the shear plane of the bolt/pin.

5. Nuts: For diameters less than or equal to 1-1/2 inches, use ASTM F594 nut with a minimum proof stress equal to or greater than the bolt, and the same alloy group as the bolt. Hex head as specified in ANSI B18.2.2. One required per bolt. For diameters greater than 1-1/2 inches, fabricate nuts from same material as the pin. Use heavy hex dimensions as specified in ANSI B18.2.2. Threads shall have Class 2B tolerances. Two nuts required with each fitted pin.

6. Flat Washers: Fabricate from same material as the anchor bolt/fitted pin. Use dimensions for American Standard Type A, narrow series washers. Two required for each anchor bolt/fitted pin.

7. Beveled Washers: Fabricate from same material as the anchor bolt/fitted pin. Nuts shall bear flat on the materials being fastened. Beveled washers shall be used where bearing faces under the nut have a slope of more than 1:20.

8. Holes: Sub-drill and ream holes in either the shop or the field as indicated on the plans. In either case, direct drills and reamers by mechanical means. Holes shall be cylindrical and perpendicular to the materials being fastened, and shall be reamed to a tolerance that will provide an LC6 fit with the turned bolt/fitted pin diameter. Holes shall have an ANSI 63 µin finish or better, and shall be ground free of sharp edges or burrs. If materials being

fastened do not mate flush, firmly draw together prior to drilling/reaming. Do not use burned or slotted holes for turned bolts/fitted pins.

9. Packaging/Shipping/Storage: Provide resealable water tight containers for shipping and storage. Pack anchor bolts/fitted pins in containers in a manner that prevents damage during shipping. Clearly and permanently label container to identify the contents and reference the contents with the plans. Store the container out of the weather at the project site, and remove only the number of turned bolts/fitted pins that will be installed in a work shift.

10. Installation: Lightweight oil may be used to facilitate assembly; however, oil shall be cleaned from threads prior to tightening nuts. Locate one flat washer under each nut. Torque the nut in accordance with Table 821-3. Turned bolts/fitted pins so torqued may be reused as long as there is no visible elongation or deformation of the pin or threads. Use only properly fitting wrenches or sockets to tighten nuts.

Table 821-3

Torque Table for High Strength Stainless Steel Bolts and Pins ASTM F593 & A564 - 135 ksi Tensile, 105 ksi Yield Threads should be clean, but not lubricated			
Bolt Diameter (inch)	**Torque (ft-lbs)**	**Bolt Diameter (inch)**	**Torque (ft-lbs)**
1/2	65	1 3/4	3,100
9/16	90	2	4,650
5/8	130	2 1/4	6,900
3/4	230	2 1/2	9,400
7/8	370	2 3/4	12,900
1	550	3	17,200
1 1/8	790	3 1/4	22,300
1 1/4	1,125	3 1/2	28,300
1 3/8	1,450	3 3/4	35,300
1 1/2	1,950	4	43,400

821.07.13 Shim Packs: Fabricate shim packs for adjustment of mechanical equipment as shown on the plans. Fabricated shim packs shall neatly match the shape of the equipment to be shimmed, have all holes/slots

pre-drilled, and have the thickness marked on each shim with an indelible marker. Submit shop drawings for fabricated shim packs to the Bridge Engineer for review. Shop drawings shall show dimensions, material and number of shims supplied with each shim pack.

The shop may fabricate a single stainless steel shim to precise dimensions for any machinery assembled in the shop.

1. "A" Shim Packs: "A" shim packs contain very fine shims and are capable of positioning mechanical equipment with a high degree of accuracy. Use where indicated on the plans for machinery that require precise alignment to function correctly (electric motors, pumps, pinion bearings, etc.).

Number, thickness, and material of shims in "A" shim packs shall be in accordance with Table 821-4.

Table 821-4

"A" Shim Packs - Number, Thickness, and Material								
Nominal Shim Pack Size (inches)	Stainless Steel, ASTM A666, Type 302/304/316							
	Shim Thickness (inches)							
	1/4	1/8	1/16	1/32	.016	.008	.004	.002
	Number of Shims per Shim Pack							
3/8	2	1	1	1	1	1	1	1
5/16	1	2	1	1	1	1	1	1
1/4	1	1	1	1	1	1	1	1
3/16	0	2	1	1	1	1	1	1
1/8	0	1	1	1	1	1	1	1

Where appropriate (under electric motor feet, pump feet, etc.), commercially available, stainless steel, square, slotted, shim packs with an accuracy of 0.001inch may be used as "A" shim packs. Submit cut sheets for commercial shim packs to the Bridge Engineer for review.

2. "B" Shim Packs: "B" shim packs are accurate to ± 1/16 inch. Use where indicated on the plans for machinery that does not require highly accurate positioning to operate properly.

Number, thickness, and material of shims in "B" shim packs shall be in accordance with Table 821-5.

Table 821-5

"B" Shim Packs - Number, Thickness, and Material								
Nominal Shim Pack Size (inches)	ASTM A709, GR. 36/50					Stainless Steel ASTM A666 302/304/316*		
	Shim Thickness (inches)							
	1	3/4	5/8	1/2	3/8	1/4*	1/8*	1/16 *
	Number of Shims per Shim Pack							
1	1	0	0	1	0	1	1	1
3/4	0	1	0	0	1	1	1	1
5/8	0	0	1	0	1	1	1	1
1/2	0	0	0	1	0	1	1	1
3/8	0	0	0	0	1	1	1	1
1/4	0	0	0	0	0	1	1	1

3. Packaging: Carefully package/bundle individual shim packs not installed in the shop in a manner that will prevent damage or the loss of shims during shipping/handling. Permanently label package/bundle to reference the shim pack with the plans. Shim packs shall then be packed together in a watertight, resealable container by the shop in a manner that prevents damage during shipping. Clearly and permanently label the container to identify the enclosed shim packs and reference the shim packs with the plans. In the field, store the container out of the weather, and do not open until ready to install the shim packs. Only remove from storage the shim packs that will be installed during a work shift.

821.07.14 Keys and Keyways: Provide keys and keyways as follows unless otherwise shown on the plans.

1. Material: For carbon or alloy steel shafts, make keys from forged steel that meets the requirements of ASTM A668/A668M, Class D minimum. Keys less than 1/2 inch square may be cold finished carbon steel that meets the requirements of ASTM A675/A675M, Grade 80. If a gearbox or other manufactured component has been specified to have a stainless steel shaft, the

key shall also be stainless steel with similar mechanical and corrosion resistant properties as the shaft.

2. Sizing and Fits: Size keys used to transmit torque generated by a prime mover to develop the full strength of the shaft. If two keys are required, locate keys 120 degrees apart, with each key capable of carrying 60 percent of the full torsional strength of the shaft. Sides of these keys shall have an FN2 fit with the keyway. Tops and bottoms of these keys shall have an LC4 fit with the keyway.

Keys not transmitting torque (such as for rotary limit switch shafts) can be sized appropriately for the load. All four sides of these keys shall have an LC4 fit with the keyway.

For manufactured items such as electric motors, gearboxes, etc., key size, length, and strength shall be determined by the manufacturer, but must meet the above requirements.

Key length shall be sufficient to fill entire keyway.

3. Fabrication: Fabricate keys and keyways to have widths and heights in accordance with ANSI Standards. Machine keys and keyways to have parallel faces with square or rectangular cross-sections. Plane surfaces to have an ANSI 63 µin finish. If tapered keys are specified, machine to bear on all four surfaces.

4 Keyways: Machine cut all keyways and provide a fillet in the bottom of each corner in accordance with ANSI B17.1. For keyways located in shafts, provide closed ends milled to a semi-circle equal to the width of the key where possible. Keyways shall not extend into any bearing or shaft shoulder fillet. In hubs of wheels with spokes, locate keyway in the center of the spoke. Provide safety set screws or other effective means to hold any key that is not set into closed end keyways.

821.07.15 Weldments: Provide weldments as follows unless otherwise shown on the plans.

1. Material: Steel for weldments shall comply with ASTM A572/A572M, Grade 50, unless otherwise specified on the plans. In all cases, steel for weldments shall be weldable grades as designated by applicable ASTM standards.

2. Fabrication: All welds shall be in accordance with Section 809, and shall be complete joint penetration unless otherwise shown on the plans. Shop drawings shall show weld type and sizes and all plate thicknesses prior to machining.

3. Tolerances: Position unfinished plates to within 0.5 degree of the specified angle on the plans. Provide flat finished surfaces to within 0.05

degree of the reference datum and a minimum surface flatness of 0.010 inch. Flat finished surfaces that mate with a manufactured part shall have a minimum surface flatness of 0.010 inch or the recommended surface flatness of the part manufacturer, whichever is more stringent. Where finish marks are shown on the plans, machine the entire surface of the weldment flat to the final dimension shown on the plans.

4. Non-Destructive Weld Testing: Weldments that support dead load, live load, or span drive forces including the counterweight sheaves, sheave pedestals, center pivot bearing housings, balance wheels, end and center wedges, span drive hydraulic cylinder mounting brackets, etc., shall be 100 percent tested by non-destructive methods in accordance with Section 809.

5. Stress Relief: Provide a stress relief heat treatment prior to final machining. Submit to the Bridge Engineer for review a schedule listing the heat treatment to be performed on each weldment. Schedule shall include a description of the part, the rate of heating, soaking temperature, time at soaking temperature (min. one hour), rate of cooling, and the temperature at which the part will be removed from the chamber.

821.07.16 Anchor Bolt Templates: Provide templates for all machinery anchor bolts even if not shown on the plans. Templates shall hold anchor bolts vertical and provide proper spacing. Submit shop drawings for all anchor bolt templates to the Bridge Engineer for review.

821.07.17 Open Gear Sets: Provide open gear sets that are spur gears with 20 degree involute, full depth teeth cut and mounted to meet requirements of the current AGMA standards. Gear quality and backlash shall be as specified on the plans. If the gear quality or backlash is not shown on the plans, request clarification from the Bridge Engineer. Show the AGMA quality number and backlash that will be cut into each gear on the shop drawings.

1. Fabrication: Fabricate open gears from solid rims or blanks, and finish the sides and peripheries. The working surfaces of all gear teeth shall be true to the proper outline, accurately spaced on the pitch circle, free from planing or mill-cutter ridges, and the surface finish smoothness shall be equal to or exceed AASHTO finish guidelines. Remove cutter burrs from edges of teeth, and round the top edges of teeth to 1/16 inch radius. For all open gears that will transmit torque from a prime mover, scribe the pitch circle on both sides of the gear not less than 1/32 inch deep with a “V” pointed tool.

Fabricate ring/bull/rack gears in segments as shown on the plans. Fit ends accurately maintaining tooth pitch across the splice. Finish the contact

surfaces between the sides of the gear segments and the gear mounting surfaces.

2. Field Installation: For rack and pinion open gear installations for movable bridges, see Section 820.

Align the pinion gear so that the backlash is near the lower end of the range shown on the plans. For acceptable gear contact, 80 percent of the teeth shall have 80 percent contact along the face of the teeth, and no tooth shall have less than 50 percent contact. If tooth contact does not meet this requirement, adjust pinion alignment and retest. Repeat until gear alignment meets both the backlash and tooth contact requirements. Once gear alignment has been verified, install bolts in the pinion bearings as shown on the plans.

821.07.18 Roller Bearings: Provide roller bearings from an established manufacturer who has produced bearings of comparable size, material, and type as that specified on the plans, and that have been in successful service for at least 10 years.

1. Shop Installation: Preferably, all roller bearings shall be installed on shafts in the shop. Large roller bearings, bore sizes 10 inches or greater, shall be installed under the direction of a representative of the bearing manufacturer. Shop shall coordinate with the bearing representative to insure that a proper environment for installing the bearings will be provided by the Shop, and all cleaning supplies, tools, and measuring devices needed to correctly install the bearings will be on hand the day of installation.

2. Transportation to the Field: Bearings that have been installed on shafts must be properly prepared for transportation to the project site in accordance with the recommendations of the bearing manufacturer. For large bearings, this may include the fabrication of a structure to support/protect the bearing during transport.

821.07.19 Electric Squirrel Cage Induction Motors: Provide electric squirrel cage induction motors that meet the following requirements, if commercially available:

1. Rated for “chemical” or “severe duty”
2. IEEE-841 standard for severe duty applications
3. NEMA MG1 standard
4. NEMA design B standard
5. NEMA premium efficiency standard
6. NEMA dimensional standards
7. Rated for continuous duty
8. 1.15 service factor

9. Totally enclosed non-ventilated (TENV) if commercially available, otherwise totally enclosed fan cooled (TEFC)
10. Foot mounted heavy duty cast iron frame or stainless steel frame
11. Oversized cast iron rotatable junction box
12. Copper windings
13. Class F insulation
14. Windings coated for tropical environments
15. Automatically resetting thermal overloads
16. Severe duty epoxy paint system both inside and out
17. Grease-able ball bearings
18. Premium shaft seals
19. All joints gasketed and sealed
20. Stainless steel hardware or at least corrosion resistant hardware
21. Stainless steel nameplate

Horsepower, frame, rpm, voltage, phase, and hertz shall be as shown on the plans.

821.07.20 Main Span Drive Speed Reducers: Design the main span drive speed reducers in accordance with current AGMA standards, and size for the horsepower input shown on the plans with a service factor of 2.0 for strength and 1.25 for durability.

1. Certified Drawings: Provide manufacturer's certified drawings that show the following as a minimum:

a. External drawings showing all mounting dimensions including shaft sizes and keyways.

b. Internal drawings showing all internal components.

c. Complete part list (with part numbers) of all components with descriptions that show materials, gear teeth information, bearing information, seal information, etc.

d. Horsepower rating, thermal rating, gear ratios, dry and wet weight, and lubricant recommendations.

2. Housing: Fabricate housing from steel with adequate inspection openings to permit easy inspection of all gears after installation. Inspection openings shall have a raised lip or "picture frame" to prevent rain water from pooling at the seal.

Attach inspection covers with stainless steel hardware that meets or exceeds the material requirements of stainless steel bolts in 821.07.8.

Provide a sight glass to measure the lubricant level.

Provide a thermometer to show oil temperature.

Provide a port to fill oil.

Provide a hygroscopic air breather with an adequate filter to prevent particulate matter from entering the housing.

Provide an oil drain port with a bronze or stainless steel drain valve. Valve shall have a bronze or stainless steel plug to prevent loss of the lubricant due to accidental opening or vandalism.

Provide a permanent, stainless steel or aluminum name plate stating the name of the speed reducer manufacturer, horsepower rating, service factors, input rpm, output rpm, exact gear ratio, thermal rating, AGMA symbol, and a name (such as "Gearbox 1") to differentiate the speed reducers.

If the speed reducer is to be installed outdoors, provide inspection cover seals, sight glass, thermometer, air breather, and paint that are appropriate for outdoor use.

3. Gears: Speed reducer shall utilize spur, helical, herringbone, and/or bevel gears fabricated and mounted to meet requirements of the current AGMA standards. Gears shall be through-hardened, cut from solid rims or blanks, and have the AGMA gear quality of Class 9 or greater. Show the AGMA gear quality on the shop drawings.

The working surfaces of the teeth shall be true to the proper outline, accurately spaced on the pitch circle, and free from planing or mill cutter ridges. Remove cutter burrs from all edges of teeth, and round the top edges of the teeth to a 1/32-inch radius.

4. Input Shafts: Provide two non-differential input shafts parallel with two output shafts as shown on the plans. Design input shafts for two times the rated horsepower of the speed reducer.

Provide diameter and length of input shafts to accommodate brake wheels, couplings, and key seating as shown on the plans.

5. Output Shafts: Provide two output shafts parallel to the input shafts as shown on the plans. Output shafts shall be capable of differential output by the means of a manual clutch mechanism.

Provide diameter and length of output shafts to accommodate couplings and key seating as shown on the plans.

6. Clutch Mechanism: Provide a manual clutch mechanism capable of locking and unlocking the output shafts while the speed reducer is loaded, unloaded, rotating, or stationary. It shall be engaged and disengaged by pushing and pulling an external rod as shown on the plans.

7. Double Shaft Seals: Provide FKM double shaft seals on the input and output shafts with provision to grease between the seals.

8. Bearings: Provide anti-friction type roller bearings with a B-10 life of 100,000 hours while transmitting the full rated motor horsepower.

9. Lubrication: Speed reducer shall be designed to provide automatic and continuous lubrication of all gear teeth and bearings. Provide a synthetic lubricant as recommended by the speed reducer manufacturer. Use the same lubricant for testing that will be used for operation. After testing, lubricant shall be removed and the gearbox shall be cleaned before shipment to the shop. New lubricant shall be used at the project site.

10. Shop Testing: Test both span drive speed reducers by the following method.

a. General: Speed reducers shall be tested by the manufacturer in the presence of a representative of the Department before shipment to the shop for incorporation in the span drive machinery shop assembly. The speed reducer manufacturer shall provide a 14 calendar days notice to the Bridge Engineer prior to the date of the testing.

Prior to adding lubricant and testing, the speed reducer manufacturer shall blue the gears and run the speed reducers to demonstrate gear alignment. Include photographs of the gear contact patterns in the final testing report.

All parts of testing shall be performed consecutively. The speed reducer manufacturer shall not start testing unless all the following testing parts can be completed.

b. Testing Part 1 – No Load Test (Both Speed Reducers): Engage clutch (output shafts locked together), turn the input shaft at 900 rpm with no load on the output shafts. Run the speed reducer for 30 minutes. Verify and record output rpm. At 10-minute intervals, measure and record the oil temperature and the external temperatures at each shaft seal and bearing cover. After 30 minutes, stop the gearbox and immediately open the inspection cover. Measure and record the temperature of all bearings.

Repeat test for opposite direction. If no problems are found, proceed immediately to Part 2.

c. Testing Part 2 – No Load Test (Both Speed Reducers): Disengage clutch (output shafts not locked together), turn the input shaft at 450 rpm and hold one output shaft fixed. Run speed reducer for 30 minutes. Verify and record output rpm. At 10-minute intervals, measure and record the oil temperature and the external temperatures at each shaft seal and bearing cover. After 30 minutes, stop the speed reducer and immediately open the inspection cover. Measure and record the temperature of all bearings.

Repeat test holding the other output shaft fixed, and turning the input shaft in the opposite direction. If no problems are found, proceed immediately to Part 3.

d. Testing Part 3 – Load Test (Both Speed Reducers): Engage clutch (output shafts locked together), turn the input shaft at 870 rpm, slowly apply load to one output shaft until full load torque is reached. Run speed reducer for 30 minutes.

Measure and record the output rpm of both output shafts to verify that there is no clutch slippage. At 10-minute intervals, measure and record the oil temperature and the external temperatures at each shaft seal and bearing cover. After 30 minutes, stop the speed reducer and immediately open the inspection cover. Measure and record the temperature of all bearings.

Repeat test turning the input shaft in the opposite direction. If no problems are found, proceed immediately to Part 4.

e. Testing Part 4 – Load Test (Both Speed Reducers): Disengage clutch (output shafts not locked together), hold one output shaft, turn the input shaft at 435 rpm, slowly apply load to the other output shaft until full load torque is reached. Run speed reducer for 30 minutes.

At 10-minute intervals, measure and record the oil temperature and the external temperatures at each shaft seal and bearing cover. After 30 minutes, stop the speed reducer and immediately open the inspection cover. Measure and record the temperature of all bearings.

Repeat test by holding the other output shaft, and turning the input shaft in the opposite direction.

f. Testing Report: After testing is complete, submit a report with all measurements taken during testing to the Bridge Engineer for review.

11. Shipment: After testing is complete, transport the speed reducers to the shop that is assembling the span drive machinery.

821.07.21 Motor and Machinery Brakes: Provide thruster operated shoe brakes as follows unless otherwise specified on the plans.

1. Features: Low force hand release; hydraulic, adjustable time delay on setting (0-8 seconds); stainless steel enclosure with means to access all adjustment points.

2. Shop Testing: Adjust the time delays on the "Motor" brakes to set in approximately one second. Adjust the time delays on the "Machinery" brakes to set in approximately four seconds. Verify through experimentation and testing that the torque scale on the brakes is correct, and that the brakes are set at the torque setting shown on the plans. The shop will demonstrate the

braking torque settings and the time delay settings at the shop to a representative of the Bridge Engineer prior to shipment to the field.

3. Field Testing: During the field testing and setup of the movable span, provide personnel, tools, and measurement equipment to adjust the brakes until the span performs to the satisfaction of the Bridge Engineer's inspector.

821.07.22 Hydraulic Reservoir: The hydraulic reservoir shall serve as the machinery platform for the hydraulic components that comprise the Hydraulic Power Unit (HPU). Design the reservoir accordingly. Utilize welded stainless steel plate construction conforming to ASTM A276, type 316 with 3/16 inch minimum thickness. Total volume shall be as shown on the plans. Features shall include removable cleanout covers, baffles, sight gauge and thermometer, electronic low level indicator, fluid sampling ports, and drain ports with bronze plugs.

821.07.23 Hydraulic Pumps: Provide hydraulic pumps as follows unless otherwise specified on the plans. Hydraulic pumps shall be fixed displacement, pressure and flow compensated, rated for continuous duty at 3,000 psi minimum, and shall have SAE four bolt flange ports with FKM O-ring seals.

821.07.24 Main Span Hydraulic Cylinders:

1. Fabrication: Bore size, rod size, stroke length, and other dimensional requirements shall be as shown on the plans. The intent of the design is for the cylinders to be rated for a working pressure of 3,000 psi, and rated against buckling in the fully extended position at a pressure of 1,700 psi with a safety factor of 3. The hydraulic cylinder manufacturer shall adjust cylinder dimensions if needed to meet this intent and submit the changes to the Bridge Engineer for review.

2. Cylinder Rods: Rods shall be high strength carbon steel, case hardened, and hard chrome plated. They shall have spanner wrench flats or other approved means to prevent the rod from rotating while assembling or removing the rod end.

3. Rod Seals and Bearings: Provide FKM seals. Sealing system for the cylinder rod shall provide for dynamic low pressure and dynamic high pressure sealing, and a scraper to prevent ingression of contaminants. Seals shall be rated for continuous use at 3,000 psi and periodic spikes of 5,000 psi. Provide wear-rings or bushings that will insure proper guidance of the rod and provide ample bearing area to prevent side loading.

4. Ports: Main ports shall be SAE code 62 four bolt flange ports with FKM O-ring seals rated for 6,000 psi.

5. Cushions: Span drive cylinders shall be cushioned at both ends. Cushions shall be adequate to slow the span from full speed to creep speed (5 percent of full flow) prior to the cylinders reaching the end of their stroke without exceeding a 5,000 psi pressure intensification in the cushion. Use a minimum 4-inch long cushion spear with dual adjustable needle valves in series to provide progressive cushioning action. Needle valves shall be tamper proof. Cushions shall be designed to provide similar force reactions from the cylinders during deceleration of the movable span. Show details of the cushions and a description of the cushion's performance on the hydraulic cylinder submittal. Cushions may be bolted to each end of the cylinder.

6. Calculations: Prepare and submit calculations for the cylinders to the Bridge Engineer for review. Calculations shall include the cylinder buckling strength, tube yield strength, rod eye tear out yield, blind end eye tear out yield, rod pull out strength, cushion calculations, and any other strength calculation deemed necessary by the Bridge Engineer.

7. Shop Testing: The Shop shall prepare and submit to the Bridge Engineer for review a test plan for the span hydraulic cylinders. Submittal shall show a schematic of the test setup, and describe the tests to be performed. The Shop must provide a power unit that can provide the pressures and flows required to perform all tests, and it shall provide all equipment needed to measure and record the test data. All testing shall be performed using the exact type of hydraulic oil that will be used on the project. Oil used in the testing shall not be reused.

At a minimum, the Shop shall perform the following tests on all span hydraulic cylinders: A pressure test, a leak test of the piston seals, a dynamic test of the cushions where the cushions must decelerate the cylinder to creep speed while the power unit is driving the cylinder without exceeding 5,000 psi in the cushion.

The Shop must demonstrate the ability to adjust the amount of cushioning with the needle valves.

8. Field Testing: During the field testing and setup of the movable span, provide personnel, tools, and measurement equipment to perform the following procedure.

Bypass the span nearly closed and closed limit switches. Open the span a few feet and close the span at a slow speed allowing only the cylinder cushions to stop the span. Measure and record the pressures in the cushions. If the span is stopping too abruptly, or if the cylinders are not equally sharing the deceleration loads, adjust the cushion needle valves until the issues are corrected. Progressively increase the closing distance and the closing speed

until the span is closed at full speed and is decelerated using only the cylinder cushions, and the cylinders are equally sharing the deceleration loads.

821.07.25 Rigid, High Pressure, Hydraulic Lines External to the HPU:

1. Material: Provide seamless, low carbon, 3,000 psi, stainless steel pipe that conforms to ASTM A312/A312M, type 304/316. Pipe shall have four bolt, SAE code 61, 3,000 psi, stainless steel flanges with FKM O-ring seals.

2. Fabrication: Shop fabricate pipe sections as shown on the plans. Where possible, turns and offsets shall be made by bending the pipe. No flattening or crimping in the bends will be allowed. Weld all pipe fittings (elbows, tees, flanges, etc.). No threaded or metal compression fittings are allowed. All welds in flanges and fittings shall be full penetration welds. Air bleeds/gauge cocks shall be provided in the piping as shown on the plans and at high points of the hydraulic system.

3. Preparation for Shipment/Shop Storage: After fabrication is complete, remove all loose scale and slag from the interior and exterior of the welds. Thoroughly clean and flush pipe sections of all contaminants. Wooden plugs shall be installed in all openings, and the pipe sections shall then be covered with heavy plastic sheeting held in place by steel bands. While at the shop, store pipe sections indoors and protect from the weather.

821.07.26 Rigid, High Pressure, Hydraulic Lines Internal to the HPU:

1. Material: Provide either stainless steel pipe as specified above, or seamless, annealed, low carbon, 3,000 psi, stainless steel tubing that conforms to ASTM A269, types 304, 304L, 316, or 316L. Tubing shall have braze type, 3,000 psi, O-ring seal flanges. No threaded or metal compression fittings are allowed.

2. Fabrication: Shop fabricate all pipe/tubing sections. Where possible, make turns and offsets by bending. No flattening or crimping in the bends will be allowed. Weld all pipe fittings (elbows, tees, etc.). No threaded or metal compression pipe/tubing fittings or flanges are allowed. After welding/brazing of a pipe/tubing section is complete, remove all loose scale and slag from the interior and exterior of the welds/brazing. Thoroughly clean and flush free all contaminants from the rigid pipe/tubing sections before they are incorporated into the HPU.

821.07.27 Rigid, Low Pressure (Tank) Hydraulic Lines, Internal and External to the HPU:

1. Material: Provide rigid, standard duty copper or stainless steel pipe; or rigid, standard duty copper or stainless steel tubing intended for use in

industrial hydraulic applications. Threaded and metal compression fittings are allowed.

2. Fabrication: Shop fabricate pipe/tubing sections. After fabrication /assembly is complete, thoroughly clean and flush free piping/tubing sections of all contaminants before incorporating into the hydraulic system.

821.07.28 Flexible Hydraulic Hoses:

1. Material: Provide flexible hydraulic hoses as specified on the plans or approved equal. Hoses shall be intended for use with high pressure industrial hydraulic systems, and rated for 5,000 psi minimum.

2. Fabrication: Flexible hydraulic hoses shall have re-useable, stainless steel, 5,000 psi, four bolt connection fittings with FKM O-ring seals. Fittings shall conform to SAE j518, code 62 specifications. Measure dimensions in the field to verify lengths before fabrication. Hose lengths shall be the minimum length needed to make the connection without having the hose exceed the minimum bend radius at any point during the normal operation of the span. Excessive looping that does not serve an operational function is not allowed.

821.07.29 Hydraulic Seals: All seals used in hydraulic systems shall be FKM seals.

821.07.30 Cleaning, Assembly, and Flushing of Hydraulic Systems: Follow all practices specified in ASTM D4174 for cleaning, flushing, and purification of hydraulic systems that apply to the fabrication, cleaning, handling, storage, assembly, contamination control, installation, flushing, testing, and operation of hydraulic systems to produce optimum system reliability. Allow only personnel experienced with contamination prevention to work on hydraulic systems.

1. Fabricated Parts: Clean and flush fabricated parts such as rigid pipe, flexible hoses, reservoir, manifold, etc. in accordance with ASTM D4174. After cleaning and flushing has been completed, wet internal surfaces that are prone to corrosion with a VSI oil that is compatible with the hydraulic oil that will be used for testing and operation of the hydraulic system. Cover all openings to prevent recontamination. Ends of rigid pipe and flexible hoses shall be sealed with cover plates, wooden plugs, or other approved method to prevent recontamination.

2. Manufactured Parts: Do not open manufactured parts until the fabricator is ready to install them as part of the hydraulic system. Prior to installation; inspect, clean, and flush manufactured parts such as, pumps, directional control valves, stop valves, relief valves, check valves, etc. in accordance with ASTM D4174.

3. Adding Hydraulic Fluid to Reservoir: Filter hydraulic fluid in accordance with ASTM D4174 any time hydraulic fluid is added to the reservoir. This includes filling the reservoir for shop testing and field testing/operation, or the addition of make-up fluid.

4. Flushing of Hydraulic System: Prior to Shop testing or field testing/operation, flush the hydraulic system in accordance with ASTM D4174.

821.07.31 Field Setup, Testing, and Break-in of Hydraulic Systems:

1. Field Setup and Testing: After field assembly and flushing has been completed, perform a static pressure test of the entire hydraulic system by pressurizing the system to 3,000 psi and holding for 15 minutes. Inspect for leaks. If leaks are found, fix the leaks and retest.

2. Break-in of Hydraulic System: After field setup and testing of the hydraulic system has been completed, operate the span at least 10 times consecutively. Remove and properly dispose of the existing hydraulic fluid and replace with new hydraulic fluid. Replace all hydraulic system filters.

821.07.32 Center Pivot Bearing for Swing Span Bridges: Center pivot bearings shall be as follows unless otherwise shown on the plans.

1. Housing: Housing shall be a steel weldment, ASTM A709/A709M, Grade 50. Housing shall come complete with oil level sight glass, oil fill port, oil drain port, air vent with plug, seals, and non-corrosive metallic name plates as shown on the plans. The center pivot bearing base may be submitted as a casting. All sections must have the same area as shown on the plans. Casting material shall be ASTM A27/A27M, Grade 70-36.

2. Bronze Disk: Bronze disk shall be a bronze casting, ASTM B 22, alloy C91300.

3. Steel Disk: Steel disk shall be ASTM A291/A291M, Grade 5, Class F, Brinell hardness greater than 300.

821.07.33 Counterweight Ropes for Vertical Lift Bridges: Only companies that specialize in the fabrication of wire ropes of the size and type specified shall supply counterweight ropes for vertical lift bridges hereafter referred to as counterweight ropes. Fabricate counterweight ropes in accordance with ASTM A1023/A1023M, ASTM A1007, all specifications referenced by these specifications, and the specifications listed herein unless otherwise specified on the plans. Dimensions for counterweight ropes shall be as shown on the plans.

1. Description: Provide all material, equipment, tools, and labor to fabricate, paint, lubricate, shop test, transport, install, and adjust the tension in

counterweight ropes as specified herein and in accordance with the intent of the plans and specifications.

2. Materials: All materials for counterweight ropes (including sockets) shall be new and as specified below. Main wire material, type of rope core, and galvanizing shall be selected by the Bridge Engineer and specified on the plans. If these materials have not been specified on the plans, clarify material specifications with the Bridge Engineer.

a. Main Wires: Shall be Extra Improved Plow Steel (EIPS) or Double Extra Improved Plow Steel (EEIPS).

b. Rope Cores: Shall have either a Hard Fiber Core (HFC) made of polypropylene or an Independent Wire Rope Core (IWRC).

c. Sockets: Machine from forged solid blanks of ASTM A668, Class D minimum. Sockets for 1 1/2 inch diameter wire ropes or greater may be machined from cast steel conforming to ASTM A148/A148M, Grade 80-50.

d. Shims: Fabricate from a single piece of marine duty stainless steel with a minimum yield strength of 30 ksi.

e. Cap Screw to Attach Shim: Attach shims to sockets with countersunk, flat head, hex-socket cap screws in accordance with ASTM F879, Alloy Group 1 or 2, Alloy Condition CW or CW1. Size shall be 3/8 inch diameter. Length is dependent on size of shim.

f. Zinc for Socket Connection: Connect wire rope to sockets with ASTM B6, High Grade (HG) zinc.

g. Zinc for Galvanizing: If the counterweight rope is specified to be galvanized, zinc shall be in accordance with ASTM B6, High Grade (HG).

3. Socket Fabrication: Do not fabricate sockets as a weldment. Sockets shall be as specified on the plans, shall conform to the requirements of the latest revision of Federal Specification RR-S-550, and shall be stronger than the wire rope. The socket shall not fail before the wire rope. The wire rope manufacturer shall notify the Bridge Engineer prior to fabrication if any of these requirements are in conflict.

Sockets can be supplied by an independent machine shop; however, the sockets must be attached to the wire ropes and tested by the wire rope manufacturer. Holes for cap screws shall be tapped 3/8 inch UNC, shall allow for 5/8 inch thread engagement minimum, and shall be located on opposite corners of the socket. Hot-dip galvanize all sockets after machining in accordance with ASTM A123/A123M.

4. Socket Testing:

a. Non-destructive Testing: Perform magnetic particle testing on all sockets in accordance with ASTM E709.

b. Socket Strength Test: See 821.07.33.10.

5. Wire Fabrication:

a. Main Wires: Fabricate in accordance with the current revision of ASTM A1007 and these specifications. Inner wires can be joined in accordance with ASTM A1023/A1023M except that only electric welding will be allowed. Outer wires cannot be joined.

b. Filler Wires: Fabricate according to the wire rope manufacturer's specifications.

c. Independent Wire Rope Core (IWRC): If the wire rope is specified to have an IWRC, fabricate wires in accordance with "5.1. Main Wires" except that all wires may be joined.

d. Galvanizing: If the wire rope is specified to be galvanized, the wire rope shall be final-galvanized by a hot galvanizing process, as described in ASTM A1023/A1023M, 6.4.1.

6. Wire Testing:

a. Main Wires: Wire diameter measurement, tensile testing, torsion testing, and wrap testing shall be performed in accordance with ASTM A1007 and ASTM A1023/A1023M. Take test samples at random from not less than 10 percent of the total number of wire coils from each production heat. Test samples can be taken from either end of the coils. If a test sample fails to meet any one of the testing requirements, the wire coil from which it was taken shall be rejected, and all wire coils from that production heat must then pass the testing process in order to be used on the project.

b. Filler Wires: No testing is required.

c. Independent Wire Rope Core (IWRC): If the wire rope is specified to have an IWRC, test wires in accordance with 821.07.33.6.1.

7. Strand Fabrication: Each strand shall consist of 19 main wires and six filler wires fabricated in one operation with all wires interlocking. The lay of the wires in the strands shall be such as to make the wires approximately parallel to the axis of the wire rope where it comes in contact with a circular cylinder circumscribed on the wire rope. If a strand has two or more inner wires that have been joined, the joints shall be spaced at least 25 feet apart.

8. Strand Testing: No testing is required.

9. Wire Rope Fabrication: Notify the Bridge Engineer 45 calendar days prior to fabrication of the wire rope so the Department may have an inspector present.

Fabricate in accordance with the current revision of ASTM A1023 and these specifications. Wire ropes shall be 6x19 classification with 6x25 filler wire construction. Wire ropes shall be preformed, have right regular lay, and

the maximum length of the lay shall be 7.5 times the diameter of the wire rope. Wire ropes shall have uniform physical properties in accordance with Tables 821-6 and 821-7, and shall be laid in accordance with the best industry practices.

All counterweight ropes used on one bridge structure shall be fabricated from one production length of wire rope. If this is not possible due to the amount of wire rope required, an additional production length can be used.

a. Independent Wire Rope Core (IWRC): If the wire rope is specified to have an IWRC, fabricate the IWRC in accordance with the same specifications as the wire rope, except that the classification and type of construction of the IWRC shall be in accordance with the wire rope manufacturer's standards.

b. Lubrication: Fiber cores shall be lubricated prior to fabrication of the wire rope. All other wire rope components shall be lubricated during the fabrication process. The lubricant shall contain a rust inhibitor and shall be submitted to the Bridge Engineer for review.

c. Test Segments of Wire Rope: During the wire rope fabrication process, set aside test segments of the wire rope in accordance with 821.07.33.10.1.

10. Wire Rope Testing: Notify the Bridge Engineer 45 calendar days prior to assembly of the test segments and any wire rope testing so the Department may have an inspector present.

The wire rope manufacturer shall provide proper facilities and test equipment to perform required tests. Detailed test reports shall be submitted to the Fabrication Engineer and the Bridge Engineer for review and acceptance for each test performed. Test reports shall describe all test procedures and list all test results.

a. Test Segments of Wire Rope: Test one segment from each end of each production length of wire rope used on the project. Test segments shall be at least 50 rope diameters long, but not longer than 12 feet.

b. Test Sockets: For testing purposes, select sockets at random from the sockets fabricated for use on the project. Use one span socket and one counterweight socket for each test segment. No sockets used in testing shall be used on the project.

c. Test Segment Assembly: Attach one span socket and one counterweight socket to each end of a wire rope test segment in a similar manner to that which will be used for the counterweight ropes. Clean area where the wire rope enters the socket, and make a suitable mark around the

rope adjacent to the socket such that any movement can be readily measured. Repeat process for each test segment.

d. Wire Rope Strength Test: Stress each test segment assembly until destruction. If a test segment assembly breaks before reaching the ultimate strength listed in Tables 821-6 and 821-7, select two additional test segments from that production length and retest. If either of these test segments fail the strength test, the entire production length shall be rejected. Fabricate a new production length and repeat the testing procedure.

e. Socket Strength Test: Sockets shall be stronger than the wire rope. If a socket fails during the wire rope strength test, perform the test again with four more sockets of the same type that failed (span or counterweight) selected at random from the sockets that will be used on the project. If any of these sockets fail, all sockets of that type shall be rejected. Fabricate new sockets from stronger steel or a heavier design, and retest.

During the strength test, the seating of the wire rope between the zinc and the socket shall not exceed 1/6 the diameter of the wire rope. Seating in excess of 1/6 the diameter of the wire rope shall be cause for rejection of that connection.

11. Prestretching: Lay wire rope straight and twisted to the correct lay. Paint a line along the entire length of one side of the wire rope to indicate the proper lay for installation in the field. Apply a load equal to 40 percent of the wire rope's ultimate strength as listed in Tables 821-6 and 821-7 and hold for five minutes. Reduce the load to five percent of the wire rope's ultimate strength, and repeat the process two more times. Release load.

12. Measurement of Segment Lengths: After prestretching is complete, support the wire rope at intervals no greater than 25 feet. Apply a load equal to 12 percent of the wire rope's ultimate strength to approximate the "as installed" load. Measure and cut the wire rope segments to lengths as shown on the plans. Segments shall be cut from one production length of wire rope. No splicing of the wire rope or its component strands will be allowed.

13. Socket Attachment: Notify the Bridge Engineer 45 calendar days prior to the attachment of sockets so the Department may have an inspector present.

The wire rope manufacturer shall attach the sockets to the wire rope using a molten zinc method sufficient to meet all requirements for wire rope testing specified in 821.07.33.10. Use the best industry practices to make attachments. Sockets for wire ropes that are smaller than or equal to 1 1/2 inches shall be preheated to insure zinc flows to the bottom of the socket.

Clean excess wire rope lubricant from the socket connection and any excess wire rope lubricant that may have run onto the sockets due to the heat

of the connection process. Paint a line around the wire rope where it enters the sockets so that any slippage between the wires and the zinc can be seen.

14. Proof Loading: Apply a load equal to 40 percent of the wire rope's ultimate strength as listed in Tables 821-6 and 821-7 to each counterweight rope and hold for five minutes. Remove load and inspect the connections between the wire rope and the sockets. Seating of the wire rope between the zinc and the socket shall not exceed 10 percent of the diameter of the wire rope. Seating in excess of 10 percent of the diameter of the wire rope shall be cause for rejection of that connection. Any visible movement between the individual wires of the wire rope and the zinc shall be cause for rejection of the connection. If either of these cases occurs, the wire rope manufacturer shall determine the cause of the failure, develop a new connection method, and assemble a replacement counterweight rope.

15. Measurement of Counterweight Ropes: After proof loading is complete, lay the counterweight ropes straight and twisted to the correct lay. Support the counterweight ropes at intervals not greater than 25 feet, and apply a load equal to 12 percent of the wire rope's ultimate strength to approximate the "as installed" load. Measure and record the lengths of the counterweight ropes. For counterweight ropes shorter than or equal to 100 feet in length, the measured length shall be plus or minus 1/4 inch of the design length. For counterweight ropes longer than 100 feet in length, the measured length shall be plus or minus 0.0002 times the design length. Reject counterweight rope lengths that do not conform to these tolerances.

16. Paint: If paint has been specified for the sockets, clean and apply all paint coatings in the Shop after measurement of counterweight ropes has been completed. Protect the wire rope during the cleaning and painting process.

17. Shims: To adjust for the permissible deviation in counterweight rope lengths specified in 821.07.33.15, the wire rope manufacturer shall fabricate a single, stainless steel, slotted shim (see material specification) that shall be attached to the rope end of the span socket. This shim is not load bearing, but will assist the contractor during the initial installation of the counterweight ropes by providing a visual cue for the actual counterweight rope length. Fabricate shims such that the actual counterweight rope length will be within 1/32 inch of the design counterweight rope length. Minimum shim thickness shall be 3/8 inch. Maximum shim thickness shall be two times the counterweight rope length tolerance plus 3/8 inch. For a counterweight rope 100 feet or less, this would be 7/8 inch. Attach shim to the span socket with two cap screws (see material specification). Cap screw length shall be based

upon the thickness of the shim and a minimum thread engagement in the socket of 5/8 inch.

Stamp the shim thickness and the counterweight rope number on the outward facing side of each shim.

18. Packaging and Identification: The wire rope manufacturer shall supply the assembled counterweight ropes on individual reels. Provide reels with the span socket out or the counterweight socket out, in accordance with the installer's preference. The diameter of the reels shall be not less than 25 times the diameter of the counterweight rope.

Fabricate and permanently attach a corrosion resistant metal tag to the span end of each counterweight rope. The tag shall list the wire rope manufacturer and address, the counterweight rope number, the design length, the fabricated length, shim thickness, and a number traceable to the wire rope manufacturer's production length.

19. Field Storage: Once shipped to the project site, locate counterweight rope reels such that neither the wire rope nor the sockets can come in contact with vegetation, mud, or standing water.

20. Field Installation: Conform to 820.09.6 for field installation.

Table 821-6

Physical Properties of Wire Rope with IWRC					
Diameter (in.)	Weight Per Length (Lbs/ft)	Minimum Ultimate Strength (Kips)			
		EIPS with IWRC		EEIPS with IWRC	
		Bright	Galvanized	Bright	Galvanized
1/2	0.46	26.6	23.9	29.2	26.3
9/16	0.58	33.6	30.2	37.0	33.3
5/8	0.72	41.2	37.1	45.4	40.9
3/4	1.04	58.8	52.9	64.8	58.3
7/8	1.41	79.6	71.6	87.6	78.8
1	1.85	103.4	93.1	113.8	102.4
1-1/8	2.34	130.0	117.0	143.0	128.7
1-1/4	2.89	159.8	143.8	175.8	158.2
1-3/8	3.49	192.0	172.8	212.0	190.8
1-1/2	4.16	228.0	205.2	250.0	225.0
1-5/8	4.88	264.0	237.6	292.0	262.8
1-3/4	5.66	306.0	275.4	338.0	304.2
1-7/8	6.49	348.0	313.2	384.0	345.6
2	7.39	396.0	356.4	434.0	390.6
2-1/8	8.34	442.0	397.8	486.0	437.4
2-1/4	9.35	494.0	444.6	544.0	489.6
2-3/8	10.42	548.0	493.2	602.0	541.8
2-1/2	11.60	604.0	543.6	664.0	597.6

Table 821-7

Physical Properties of Wire Rope with HFC					
Diameter (in.)	Weight Per Length (Lbs/ft)	Minimum Ultimate Strength (Kips)			
		EIPS with HFC		EEIPS with HFC	
		Bright	Galvanized	Bright	Galvanized
1/2	0.42	23.6	21.2	25.8	23.2
9/16	0.53	29.8	26.8	32.6	29.3
5/8	0.66	36.8	33.1	40.4	36.4
3/4	0.95	52.4	47.2	57.6	51.8
7/8	1.29	70.8	63.7	78.0	70.2
1	1.68	92.0	82.8	101.2	91.1
1-1/8	2.13	115.8	104.2	127.2	114.5
1-1/4	2.63	142.2	128.0	156.4	140.8
1-3/8	3.18	171.0	153.9	188.0	169.2
1-1/2	3.78	202.0	181.8	222.0	199.8
1-5/8	4.44	236.0	212.4	258.0	232.2
1-3/4	5.15	272.0	244.8	300.0	270.0
1-7/8	5.91	310.0	279.0	342.0	307.8
2	6.73	352.0	316.8	388.0	349.2
2-1/8	7.60	394.0	354.6	434.0	390.6
2-1/4	8.52	440.0	396.0	484.0	435.6
2-3/8	9.49	488.0	439.2	538.0	484.2
2-1/2	10.50	538.0	484.2	590.0	531.0

821.07.34 Counterweight Ropes for Movable Barriers: All specifications for 821.07.33 shall apply to counterweight ropes for movable barriers except as follows:

1. Socket Fabrication: When fabricating sockets, do not attach shims to sockets with cap screws.

2. Wire Rope Fabrication: When fabricating wire rope, the maximum length of the lay shall be 6.75 times the diameter of the wire rope. For barriers with two counterweight ropes on each side, provide ropes with opposite lay.

3. Shims: Do not attach load bearing shims to the sockets. Place shims in the socket holder.

4. Packaging and Identification: Attach tag to the counterweight end of each counterweight rope.

821.07.35 Operating Ropes for Movable Bridges: All specifications for 821.07.33 shall apply to operating ropes except as follows:

1. Socket Fabrication: Unless shown on the plans or directed otherwise, sockets will not be required for operating ropes. If sockets are required, shims do not need to be attached to sockets with cap screws.

2. Wire Rope Fabrication: When fabricating wire rope, the maximum length of the lay shall be 6.75 times the diameter of the wire rope. If sockets are not required for operating ropes, seize ends and weld wires together. Remove seizing at installation.

3. Shims: Unless shown on the plans or directed otherwise, shims will not be required for operating ropes. If shims are required, they shall be load bearing and not attached to the sockets.

4. Packaging and Identification: Attach tag to either end of the operating rope.

821.07.36 Shop Storage of Mechanical Equipment: Prepare and package all Shop fabricated mechanical equipment for storage in the Shop immediately after fabrication is complete in a manner that will prevent distortion, corrosion, damage, and contamination. This includes painting metal surfaces, coating unpainted metal surfaces with a corrosion preventing grease (1/32 inch min. film thickness), coating interior metal surfaces with a VSI oil, use of wooden lagging to prevent damage to machined surfaces, wrapping parts with plastic, providing wooden supports/crates, etc. Store all Shop fabricated and manufactured mechanical equipment out of the weather in a manner that prevents distortion, corrosion, damage, and contamination and in accordance with the manufacturer's recommendations. Shop must request permission from the Bridge Engineer in advance to store any mechanical equipment out of doors.

821.07.37 Delivery of Mechanical Equipment to the Project Site: Prepare and package all Shop fabricated and manufactured mechanical equipment for transport to the project site in accordance with the manufacturer's recommendations and in a manner that will protect it from the weather and from damage during transport. This may include measures in

addition to that which were taken for Shop storage.

821.07.38 Field Storage of Mechanical Equipment: As specified elsewhere, some mechanical equipment shall not be transported to the field until the Contractor is ready to install the equipment in its permanent location on the bridge structure. Uninstalled mechanical equipment at the project site must be stored out of the weather in a manner that permits easy access for identification and inspection, and prevents distortion, corrosion, damage, and contamination.

821.07.39 Field Installation of Mechanical Equipment: Provide personnel who are trained and experienced in installing the type of mechanical equipment shown on the plans. Provide millwrights to align and install open gears, shafts, gearboxes, electric motors, brakes, etc.

At all times, follow manufacturer's installation instructions and use best industry practices when installing mechanical equipment. Remove protective grease/oil by the use of approved solvents and methods prior to the application of operating grease/oil.

821.08 MECHANICAL CONSTRUCTION REQUIREMENTS FOR FACILITIES

This section sets forth general requirements for the construction of new mechanical systems and/or the renovation of existing mechanical systems for facilities, such as HVAC systems, plumbing systems, sewage treatment plants, and sewage lift stations.

821.08.1 Outdoor Mechanical Equipment Requirements: All mechanical equipment that is to be installed outdoors and exposed to the weather shall be rated for outdoor use, shall have a minimum 500 hour salt spray corrosion coating system in accordance with ASTM B17, and shall be installed in a manner to allow easy access for maintenance. All outdoor mechanical equipment with coils shall have coil guards.

All mechanical equipment and accessories mounted on roofing structures shall be installed in strict accordance with the roofing manufacturer's recommendations. Installation shall not invalidate any new or existing roofing warranties. In addition, mechanical equipment installed on a roof shall be mounted securely to the building structure such that it meets or exceeds the IBC wind load requirements for both location and elevation.

821.08.2 Potable Water Piping: All potable water pipe and fittings shall be NSF approved for potable water service and bear the "NSF 14 and NSF 61" (NSF-pw for plastic pipe) mark indicating suitability for use in transporting potable water. Test the water lines in accordance with "PIPE

TESTING" as defined below. After testing has been completed, thoroughly sterilize the entire potable water piping system as specified under "POTABLE WATER PIPING STERILIZATION" below. Piping materials shall be as follows:

1. Inside Building Walls and Under Foundations: Use copper water tube conforming to ASTM B88, Type L annealed and/or drawn tempered. No joints will be allowed under foundations. Drawn tempered copper piping may be run in walls and ceiling spaces only. Connections shall be wrought copper and copper alloy solder joint pressure fittings in accordance with ASME 16.22. Flux shall meet or exceed alloy grade ASTM B813.

2. Exposed Inside or Outside of Building: Use Schedule 40 seamless galvanized steel pipe with welded fittings conforming to ASTM A53/A53M, Type E, Grade B, standard weight. Fittings shall be galvanized in accordance with ANSI B16.4, Class 125, Standard Pattern. Galvanized pipe nipples shall be ASTM A733 made of ASTM A53/A53M or ASTM A106/A106M, Standard Weight, seamless pipe with threaded ends.

3. Underground Water Pipe and Fittings (Excluding Hydronic Piping): Use plastic pipe conforming to ASTM D2239. Plastic pipe shall be polyethylene DR 11 minimum, PE 3608, rated for a working pressure of 160 psi minimum. Working pressures which exceed 160 psi due to elevation changes or system pressures will require the use of polyethylene pipe which exceeds these working pressures. Fittings shall be of like material and have the same or greater pressure rating. Join all polyethylene piping into continuous lengths at the job site, above ground, using the butt fusion method conforming to ASTM D3261.

821.08.3 Vent Piping:

1. Concealed, Above Foundations: Vent pipe and fittings three inches in diameter and smaller installed in concealed spaces above foundations shall conform to ASTM D2665, Schedule 40. Use solvent weld joints conforming to ASTM D2564.

2. Exposed: Use Service Weight, centrifugal-coated, cast iron pipe conforming to ASTM A74 for any exposed vent pipe installation. Hubs and spigots shall have neoprene gaskets with no-hub joints conforming to ASTM C564. No exposed PVC piping shall be allowed.

821.08.4 Gravity Sanitary Waste Piping:

1. Concealed, Exposed, and Below Foundations: Use Service Weight, centrifugal-coated cast iron pipe meeting ASTM A74, hub and spigot with neoprene gaskets with no-hub joints conforming to ASTM C564.

2. Underground (Outside Foundations): Use plastic pipe and fittings conforming to ASTM D2665, Schedule 40 with solvent weld joints conforming to ASTM D2564.

821.08.5 Forced-Main Sanitary Waste Piping:

1. Above Ground: Use Schedule 40 seamless galvanized steel pipe with welded fittings conforming to ASTM A53/A53M, Type E, Grade B, standard weight. Fittings shall be galvanized in accordance with ANSI B16.4, Class 125, Standard Pattern. Galvanized pipe nipples shall be ASTM A733 made of ASTM A53/A53M or ASTM A106/A106M, Standard Weight, seamless pipe with threaded ends.

2. Underground: Use plastic pipe conforming to ASTM D2239. Plastic pipe shall be polyethylene DR 11 minimum, PE 3608, rated for a working pressure of 160 psi minimum. Working pressures which exceed 160 psi due to elevation changes or system pressures will require the use of polyethylene pipe which exceeds these working pressures. Fittings shall be of like material and have the same or greater pressure rating. Join all polyethylene piping into continuous lengths at the job site, above ground, using the butt fusion method conforming to ASTM D3261.

821.08.6 Hydronic Piping:

1. Above Ground: Use ASTM A53/A53M Schedule 40, seamless black pipe with grooved ends for piping equal to 3 inches in diameter and above. Join pipe sections and fittings together using either welded (plain end) or grooved mechanical joint type rigid and flexible pipe couplings. Piping under 3 inches in diameter shall be copper water tube conforming to ASTM B88, Type L hard drawn. Connections shall be wrought copper and copper alloy solder joint pressure fittings in accordance with ASTM B32. Flux shall meet or exceed alloy grade ASTM B813.

2. Underground: Use a pre-insulated piping system with 1½ inch polyurethane insulation and with a 0.070 inch minimum thick, high-density, black industrial grade polyethylene jacket. Carrier pipe shall be standard weight carbon steel, ASTM A53/A53M Grade B, Type E, Schedule 40. The pre-insulated pipe shall be in unitized factory pre-fabricated sections. Pipe shall be rated for use with chilled water systems. Insulation shall be 90 to 95 percent formed-in-place closed-cell polyurethane with 2 pounds per cubic foot density, completely filling the annular space between the carrier pipe and pipe casing. Thermal conductivity shall be a minimum of 0.16 BTU-in/(hr-ft^2-°F) at 73°F. Pipe shall be pressure tested at 150 psig for a minimum of 24 continuous hours in the presence of the Project Engineer or representative. After hydrostatic testing of the pipe, insulate field joint with kits provided by

the pre-insulated pipe manufacturer. Apply field joint insulation in straight sections by pour forming in-situ using molds furnished by system manufacturer. Seal field joint insulation surface with heat shrinkable sleeve. Insulation and jacket on all fittings shall be factory-applied after pipe spool fabrication, extending continuously onto adjoining straight sections of pipe.

821.08.7 Natural Gas Piping:

1. Above Ground: Use ASTM A53/A53M, black steel, Schedule 40, Type E or S, Grade B. Malleable-iron threaded fittings shall be ASME B16.3, Class 150, standard pattern. Unions shall be ASME B16.39, Class 150, malleable iron with brass-to-iron seat, ground joint, and threaded ends.

2. Underground: Use polyethylene plastic pipe and fittings conforming to ASTM D2513. Piping shall be marked "gas" and "ASTM D2513." Join all polyethylene piping into continuous lengths at the job site, above ground, using the butt fusion method ASTM D3261 with dimensions matching PE pipe. Polyethylene pipe shall be yellow in color conforming to ANSI/ASME A13.1 standard.

3. Painting: Paint exterior and exposed interior gas piping from the service point (gas regulator/meter) to gas appliance connections. Prepare pipe surfaces to receive paint using solvent cleaners in accordance with SSPC-SP1 and hand tool method in accordance with SSPC-SP2. All pipe scheduled for painting shall be clean, dry, and in sound condition free of rust, oil, grease, and other contaminants. Use one coat of a metal alkyd primer and two finish coats of high-solids, alkyd industrial enamel. Gas pipe color shall be yellow and shall meet ANSI/ASME A13.1.

821.08.8 Refrigerant Piping: Use seamless copper tube conforming to ASTM B280, Type ACR for air conditioning and refrigeration field service. Fittings and unions shall conform to ASME B16.22. Solder shall conform to ASTM B32, 95-5, tin antimony, or alloy HB solder to join copper socket fittings on copper pipe. Brazing filler metals shall comply with AWS A5.8. A moisture flow and sight glass indicator shall be installed in the piping.

821.08.9 Pipe Insulation Materials:

1. Mineral-Fiber, Preformed Pipe Insulation: Type I, 850 ºF. Mineral or glass fibers shall be bonded with a thermosetting resin. Comply with ASTM C547, Type I, Grade A. Mineral-fiber adhesive shall comply with MIL-A-3316C, Class 2, Grade A.

2. Flexible Elastomeric Pipe Insulation: Closed-cell, sponge, or expanded-rubber materials. Comply with ASTM C534, Type I for tubular materials. Flexible elastomeric adhesive shall comply with MIL-A-24179A, Type II, Class I.

3. Mastics: Materials shall be compatible with insulation materials, jackets, and substrates; comply with MIL-PRF-19565C, Type II.

821.08.10 Insulation Type and Thickness:

1. Exposed Interior Potable Water Piping: Mineral fiber; 1 inch thick.
2. Exposed Exterior Potable Water Piping: Mineral fiber, 2 inches thick.
3. Interior Hydronic Piping: Mineral fiber; 2 inches thick.
4. Exterior Hydronic Piping: Mineral fiber; 3 inches thick.
5. Refrigerant Piping: Flexible elastomeric; 2 inches thick.

821.08.11 Pipe Jackets: Install the following types of piping jackets and markers on all exposed above ground piping:

1. Exterior: Cover exposed exterior insulated piping with an aluminum jacket, complying with ASTM B209, Alloy 3003, 3005, 3105, or 5005, Temper H-14. Sheet and roll stock shall be ready for shop or field sizing. Finish and thickness shall be a minimum of 0.032 inch. Moisture barrier for outdoor applications shall be 3-mil thick, heat-bonded polyethylene and kraft paper. Factory fabricated fitting covers shall have the same material, finish, and thickness as the jacket.

Use preformed 2-piece or gore, 45- and 90-degrees, short- and long-radius elbows, tee covers, flange and union covers, end caps, beveled collars, and valve covers. Use field fabricated fitting covers only if factory fabricated fitting covers are not available.

2. Interior: Cover exposed insulated piping in mechanical rooms with a 20-mil minimum PVC jacket, meeting ASTM D1784, Class 16354-C. PVC jacket shall be rated to a 150°F temperature limit. Clean insulation surface thoroughly before application of PVC jacket. Factory fabricated fitting covers shall have the same material, finish, and thickness as jacket.

Use preformed 2-piece or gore, 45- and 90-degree, short- and long-radius elbows, tee covers, flange and union covers, end caps, beveled collars and valve covers. Use field fabricated fitting covers only if factory fabricated fitting covers are not available.

3. Colors: Colors shall be in accordance with ANSI/ASME A13.1 and Table 821-8.

Table 821-8

Pipe Jacket Colors	
Type of Pipe	**Color**
Chilled Water	Blue
Hot Water	Orange
Fire Suppression Systems	Red
City Water (Makeup)	White
Natural Gas	Yellow
Process Water	Purple

4. Pipe Markers: For pipes located in mechanical rooms in buildings, provide and install pipe markers to indicate direction of flow. Apply markers so as to remove any doubt as to the circulation characteristics of the system. Markers shall be plastic wrap-around type with lettering a minimum of 1/2 inch in height on pipe sizes up to NPS 6. Markers on pipe sizes larger than NPS 6 shall be plastic strap-retained, secured with nylon ties with lettering a minimum of 1-1/4 inches in height. Pressure adhesive markers will not be allowed. Lettering and background color shall be as specified in ANSI/ASME A13.1 and Table 821-9.

Table 821-9

Pipe Marker Colors			
Type of Pipe	**Label**	**Text Color**	**Background Color**
Chilled Water Supply	CHWS	White	Green
Chilled Water Return	CHWR	White	Green
Hot Water Supply	HWS	White	Green
Hot Water Return	HWR	White	Green
City Water (Makeup)	City Water	White	Green
Natural Gas	Gas	Black	Yellow
Process Water	Process Water	White	Green
Fire Suppression	Fire Sprinkler	White	Red
Compressed Air	Compressed Air	White	Blue

821.08.12 Pipe Installation (All Pipe): Install all piping in a neat, workmanlike manner. Mark each length of pipe and each pipe fitting in accordance with the approved standard and specification to which it is manufactured. Install piping so as to eliminate air pockets and permit drainage. Provide air relief at all high points and drains at all low points. Make allowances for expansion and contraction. Pipe all air vents to drain.

Slope horizontal soil waste and drain pipe as shown on the plans, or where not specifically indicated, grade in the direction of flow at 1/4 inch per foot for pipe diameters of less than 4 inches and 1/8 inch per foot on line sizes of 4 inches or greater.

Make changes in pipe size on soil, waste, and drain lines using reducing fittings, recessed reducers, or flush bushings. Make all changes in direction using long radius fittings, except that sanitary tees may be used on vertical stacks, and short quarter bends or elbows may be used where the change is from horizontal to vertical. Where it becomes necessary because of space conditions to use short radius fittings in any other location, obtain permission from the Project Engineer before installation.

Where pipes extend through roof or outside walls, flashings will be required for weatherproofing. Roof and wall flashings shall be in strict accordance with the state sanitary code and the roofing manufacturer's requirements.

Where pipes pass through walls and floors, provide weather tight stainless steel split plate escutcheons. Escutcheons shall be 16 gauge 300 series stainless steel with a satin finish and spring clip fasteners. Escutcheons shall fit snuggly around the pipe outer diameter and shall cover the entire wall opening.

Support suspended piping every four feet using beam clamps or beam clamps in combination with anchor rods and hangers. Install pipe supports so as not to damage insulation or jacketing. All beam clamps, anchor rods, hangers, and associated hardware shall be marine grade stainless steel.

Underground piping shall be as follows:

1. Bury piping a minimum of 36 inches below grade and a minimum of 60 inches below roadway surface. Water lines shall not be buried in the same trench as sewer lines.
2. Pipe trench excavation shall be in accordance with 701.03.
3. Install underground piping with restrained joints at horizontal and vertical changes in direction. Use restrained-joint piping, thrust blocks, anchors, tie-rods and clamps, and other supports. Concrete shall be Class A in accordance with Section 901.

4. Place and tamp a 4-inch thick layer of sand in the trench to provide uniform bedding for the piping system. After piping is installed, evenly backfill the entire trench with sand in 6-inch compacted layers to a minimum height of 6 inches above the top of the insulated piping system. Evenly and continuously backfill the remaining trench in uniform layers with select fill in accordance with Section 701 to the finished grade level.

5. Hydroseed backfilled areas in accordance with Section 739; seed species to match existing.

6. Provide detectable warning tape on all underground non-metallic lines. Use acid and alkali-resistant, PE film warning tape manufactured for marking and identifying underground utilities, a minimum of 6 inches wide and 4 mils thick, continuously inscribed with a description of the utility. The tape shall have a metallic core encased in a protective jacket for corrosion protection, detectable by metal detector when tape is buried up to 30 inches deep. Follow APWA and ANSI/ASME A13.1 for installation and color requirements.

821.08.13 Pipe Testing:

1. Pressure Piping Systems: Test for leaks at 50 psi above working pressure or 100 psi whichever is greater for a minimum of four hours before placing slabs, closing walls, ceilings or before backfilling. Repair leaks found by replacing the entire defective section and retest the system until proven free of defects. Perform testing in the presence of the Project Engineer or his representative.

2. Gravity Piping Systems: Test for four hours under a head of 10 feet and show no leaks. Provide a copy of the manufacturer's recommended testing procedure to the Project Engineer prior to the test and use as the basis for inspection. Repair leaks found by replacing the entire defective section and retest the system until proven free of defects. Perform testing in the presence of the Project Engineer or his representative.

3. Gas Piping Systems: Test and purge in accordance with NFPA 54.

4. Refrigerant Line Testing: Comply with ASME B31.5, Chapter VI. Test refrigerant piping and specialties. Isolate compressor, condenser, evaporator, and safety devices from test pressure if they are not rated above the test pressure. Test high and low pressure side piping of each system separately at no less than 300 psig for suction lines, 535 psig for heat pumps, and no less than 535 psig for liquid and hot gas lines. Fill system with nitrogen to the required test pressure. System shall maintain test pressure at the manifold gauge throughout duration of test. Test joints and fittings with electronic leak detector or by brushing a small amount of soap and glycerin solution over joints. Remake leaking joints using new materials, and retest until satisfactory

results are achieved.

821.08.14 Heat Trace Wiring for Freeze Protection: Use heat trace wiring to protect water piping from freezing in outdoor and unconditioned areas. Heat trace wiring shall be listed and labeled as defined in NFPA 70, by a qualified testing agency, and marked for intended location and application. All components shall be from the same manufacturer. Do not exceed the maximum wire length list by the manufacturer for a given electrical circuit size.

1. Ambient Thermostats for Freeze Protection: Shall have an ambient-sensing probe with adjustable temperature range from 0 to 225 ºF. Switch shall be snap action, open-on-rise, single pole with minimum current rating adequate for connected cable. Shall have a resistance temperature device or thermistor for sensing ambient air temperature, and a NEMA 4X enclosure.

2. Heating Element: Heating elements shall consist of a pair of parallel No. 16 AWG, tinned, stranded copper bus wires embedded in cross-linked conductive polymer core, which vary heat output in response to temperature along its length. Terminate with waterproof, factory-assembled, non-heating leads with connectors at one end, and seal the opposite end watertight. Cable shall be capable of crossing over itself once without overheating. Electrical insulating jacket shall be flame-retardant polyolefin. Cable cover shall be tinned-copper braid and polyolefin outer jacket with ultraviolet inhibitor.

3. Cable Installation: Cable installation accessories include fiberglass tape, heat-conductive putty, cable ties, silicone end seals and splice kits, and installation clips all furnished by the manufacturer, or as recommended in writing by the manufacturer.

821.08.15 Potable Water Piping Sterilization: Sterilize the potable water piping system in the presence of the Project Engineer or other designated Department representative.

Clean interior of new domestic water piping system. Remove dirt and debris as work progresses. Before using, purge new piping and parts of existing piping that have been altered, extended, or repaired. Use purging and disinfecting procedures prescribed by authorities having jurisdiction (AHJ). If methods are not prescribed, use procedures described in either AWWA C651 or AWWA C652 or the following procedure:

1. Flush piping system with clean, potable water until clean water appears at all outlets.

2. Sterilize system according to either of the following:

a. Fill potable water system or part thereof with a water/chlorine solution that has at least 50 ppm of chlorine. Isolate with valves and allow to

stand for 24 hours.

b. Fill potable water system or part thereof with a water/chlorine solution that has at least 200 ppm of chlorine. Isolate with valves and allow to stand for three hours.

3. After the standing times are complete, flush the system with clean, potable water until no chlorine can be detected coming from any outlets.

4. Repeat procedures if biological examination shows contamination.

5. When no contamination is found, submit water samples in sterile bottles to authorities having jurisdiction (AHJ).

6. Prepare and submit reports of purging and disinfecting activities, including test reports.

821.08.16 Plumbing Specialties: Plumbing fixtures shall be rigidly supported and fitted with necessary trimmings. Exposed metal parts, trim, brackets, drains, supply lines, etc. shall have a chrome-plated finish. Flexible supply hoses shall be braided stainless steel with compression fittings on one end and pipe thread on the other end, and shall comply with ASME 112.18.6. Fixtures shall have a water seal trap of not less than two inches or greater than four inches. Traps shall have cleanouts, and shall be placed as close to the fixture as possible. Immediately after installation of plumbing fixtures, cover each fixture with a fixture protector. Each fixture shall have an accessible shut-off valve in the water supply line that allows the fixture to be shut-off without interfering with the water supply to any other fixture. Shut-off valves shall comply with ASME A112.18.1/CSA B125.1.

All pipes passing through walls shall have stainless steel escutcheons on finished sides of walls. All escutcheons shall be held in place by stainless steel set screws. Plumbing fixtures in publically accessible buildings shall comply with all ADA requirements. Water hammer arrestor devices shall be installed at each individual fixture. Water hammer arrestors shall be 1-1/2 inches copper pipe, 18 inches high. Supply and install the quantity and type of plumbing fixtures in the locations as shown on the plans in full accordance with the manufacturer's instructions and the LSAC and LPC.

821.08.17 Natural Gas Accessories: Fixtures shall have individual shut-off valves consisting of two-piece, full-port, bronze ball valves with bronze trim: MSS SP-110. Install flexible connectors from each fixture to the shut-off valve on equipment. Flexible connectors shall comply with ANSI Z21.26 and Z21.75. Install appliance regulators where required. Install dielectric unions where required conforming to ASSE 1079. Install line and equipment regulators conforming to ANSI Z21.80a where required.

821.08.18 Water Closet - Close Coupled (Gravity Tank) Type: Provide commercial grade water closets and accessories that conform to ASME A112.19.2/CSA B45.1 and ASME A112.19.5. Use wall or floor mounted water closets as specified. Provide wall carriers on all wall mounted water closets. Comply with ADA if required. Close coupled type water closets shall have the following features:

1. Material: Vitreous china.
2. Bowl Type: Siphon Jet.
3. Height: Standard or as required by ADA, if applicable.
4. Rim Contour: Elongated.
5. Water Consumption: 1.6 gal per flush.
6. Color: White.
7. Fasteners: Marine Grade Stainless Steel.

821.08.19 Water Closet - Top Spud (Flush Valve) Type: Provide commercial grade water closets and accessories that conform to ASME A112.19.2/CSA B45.1 and ASME A112.19.5. Use wall or floor mounted water closets as specified. Provide wall carriers on all wall mounted water closets. Comply with ADA if required. Top spud type water closets shall have the following features:

1. Material: Vitreous china.
2. Bowl Type: Siphon Jet.
3. Height: Standard or as required by ADA, if applicable.
4. Rim Contour: Elongated.
5. Water Consumption: 1.6 gal per flush.
6. Spud Size and Location: NPS 1-1/2; top.
7. Color: White.
8. Flushometer Valve: Comply with ASSE 1037. Provide with diaphragm, integral check stop device, integral backflow prevention device, exposed brass body with corrosion resistant components, a lever handle, chrome plated finish (US26D), and an NPS 1 minimum inlet.

821.08.20 Toilet Seats: Provide toilet seats that conform to IAPMO/ ANSI Z124.5. Toilet seats shall have the following features:

1. Material: Plastic.
2. Type: Commercial (Standard).
3. Shape: Elongated rim, closed front.
4. Hinge: Check.
5. Hinge Material: Stainless steel; concealed.
6. Seat Cover: Required.
7. Color: White.

821.08.21 Lavatories: Provide commercial grade lavatories and accessories that conform to ASME A112.19.3/CSA B45.4 and NSF 61. Use wall or countertop mounted lavatories as specified. Provide wall carriers on all wall mounted lavatories. Use and install in accordance with ADA requirements where required. Lavatories shall have the following features:

1. Material: Vitreous china.
2. Color: White.
3. Bowl Type: Rectangular.
4. Size: As specified or as required by ADA, if applicable.
5. Height: Standard or as required by ADA, if applicable.
6. Mounting: For countertop type, provide material sealant and under-counter mounting kit. For wall-mounted type, provide chair carrier.
7. Fasteners: Marine grade stainless steel.

821.08.22 Sinks: Provide commercial grade sinks and accessories that comply with ASME A112.19.2/CSA B45.1 and NSF 61. Use and install in accordance with ADA requirements where required. Sinks shall have the following features:

1. Material: 0.050-inch stainless steel.
2. Finish: Satin stainless steel.
3. Bowl Type: Compartments are to be as specified on the plans.
4. Size: As specified or as required by ADA, if applicable.
5. Height: Standard or as required by ADA, if applicable.
6. Mounting: Material sealant and under-counter mounting kit.
7. Fasteners: Marine grade stainless steel.

821.08.23 Faucets: Provide two-handle center set faucets with rigid gooseneck spouts that conform to ASME A112.18.1/ANSI A117.1 and NSF 61. Device is to be certified as lead free. Faucets shall have the following features:

1 Material: Solid Brass Construction.
2. Finish: Polished chrome – US26D.
3. Type: 4-inch lever handles with rigid gooseneck spout.
4. Height: Standard or as required by ADA if applicable.

5. Valve Type: Ceramic disc.
6. Fasteners: Marine grade stainless steel.

821.08.24 Water Coolers: Provide commercial grade water coolers and accessories that comply with NSF 61 and ASHRAE 34, "Designation and Safety Classification of Refrigerants," for water coolers. Provide HFC 134a (tetrafluoroethane) refrigerant unless otherwise indicated. Use flush-to-wall mounted type water coolers and provide wall carriers. Provide bi-level type water coolers and install in accordance with ADA requirements, where required.

1. Cabinet Material: Stainless steel.
2. Finish: Satin finish stainless steel.
3. Bowl Type: Rectangular
4. Size: As specified or as required by ADA, if applicable.
5. Height: Standard or as required by ADA, if applicable.
6. Mounting: Chair carrier.
7. Bubbler: One with adjustable stream regulator, located on deck.
8. Control: Push button
9. Fasteners: Marine grade stainless steel.

821.08.25 Tank Water Heaters (Electric): Provide electric tank water heaters that conform to UL 1453. Water heaters shall have the following features:

1. Storage-Tank: ASME-code steel pressure rated for 150 psig. Tappings shall be factory fabricated of materials compatible with tank and piping connections. Attach tappings to tank before testing. Interior finish shall comply with NSF 61 barrier materials for potable-water tank linings, including extending lining material into tappings.
2. Anode Rod: Replaceable magnesium.
3. Drain Valve: Corrosion-resistant metal complying with ASSE 1005.
4. Insulation: Comply with ASHRAE/IESNA 90.1.
5. Jacket: Steel with enameled finish.
6. Heating Elements: Electric, screw-in or bolt-on immersion type, arranged in multiples of three.
7. Temperature Control: Adjustable thermostat.
8. Safety Controls: High-temperature-limit and low-water cutoff devices or systems.
9. Relief Valves: ASME rated and stamped for combination temperature-and-pressure relief valves. Include one or more relief valves with total relieving capacity at least as great as heat input, and include pressure setting less than domestic-water heater working-pressure rating. Select one relief

valve with sensing element that extends into storage tank. The drain is to be piped inside of an exterior wall and penetrate the wall outside 12 inches above finished grade.

821.08.26 Water Heater Accessories:

1. Drain Pan: Use 16 gauge marine grade stainless steel. Sides are a minimum of 3 inches in height and a minimum of 3 inches wider than sides of the storage tank. The drain is to be piped inside of an exterior wall and penetrate the wall outside 12 inches above finished grade. If located in a mechanical room, pipe drain lines to nearest floor drain.

2. Temperature and Pressure Piping: Use copper water tube conforming to ASTM B88, Type L drawn tempered. Drawn tempered copper piping may be run in walls and ceiling spaces only. Connections shall be wrought copper and copper alloy solder joint pressure fittings in accordance with ASME 16.22. Flux shall meet or exceed alloy grade ASTM B813.

3. Cold Water Shut-off Valve: Provide a gate valve (specified below) on the entering cold water line.

4. Tank Drain Valve: Provide a gate valve (specified below) on the exiting hot water line, mounted below the water tank, if no means to drain the water tank is provided by the manufacturer.

5. Gate Valves: The gate valve shall conform to MSS SP-80, Type 2, be Class 125, and have a CWP rating of 200 psig. Body shall be bronze with integral seat and screw-in bonnet, and ends shall be threaded or soldered joint. Hand wheel shall be malleable iron, bronze or aluminum. Valve stem shall be bronze, disc shall be a solid bronze wedge, and packing shall be asbestos free.

821.08.27 Split System Air Conditioners - 5 Tons or Less - Electric Heat:

1. Air Handling Units:

a. Chassis: Galvanized steel with flanged edges, faced glass fiber duct liner, and removable insulated panels for servicing.

b. Electrical: Provide a single point power connection and breaker sized in accordance with the manufacturer's recommendation and NEC code requirements. See Section 822 for electrical requirements.

c. Expansion Coil: Provide with copper tube, mechanically bonded aluminum fins, and an expansion valve. Comply with ARI 206/110.

d. Electric Heating Coil: Provide with helical, nickel-chrome, resistance wire heating elements with refractory ceramic support bushings, automatic reset thermal cutout, built-in magnetic contactors, manual reset thermal cutout, airflow proving device, and one time fuses in terminal box for over current protection.

e. Fan: Provide with double-width wheel of galvanized steel, and forward-curved blades. Fan shall be directly connected to the motor.

f. Fan Motor: Provide a multi-tapped, multi-speed motor with internal thermal protection, permanent lubrication, and a plug connection. Motor shall comply with NEMA designation, temperature rating, service factor, enclosure type, and efficiency requirements as specified.

g. Air Filtration Section: Provide filter holding frames arranged for flat or angular orientation, with access doors on both sides of the unit. Filters shall be removable from one side or by lifting out from the access plenum. Provide permanent cleanable filters. Air filtration section shall comply with NFPA 90A. Minimum resistance shall be in accordance with ASHRAE 52.1, and MERV shall be in accordance with ASHRAE 52.2.

h. Condensate Drain Pan: Provide with one percent slope in at least two planes to collect condensate from cooling coils (including coil piping connections, coil headers, and return bends) and humidifiers, and to direct water toward drain connection. Drain pan shall have a minimum height of three inches, and a length and width that extends a minimum of three inches beyond the air handling unit. Provide a float switch on the drain pan to de-energize the air conditioning system when positive contact is made. Fabricate drain pan from a single-wall, 16 gauge, marine grade stainless-steel sheet. Provide a drain connection located at the lowest point of the drain pan and size to prevent overflow. Terminate with threaded nipple on one end of drain pan. Connection size to be a minimum of 1 inch.

2. Condensing Units:

a. Casing: Steel finished with baked enamel in color selected by the Architect, with removable panels for access to controls, weep holes for water drainage, and mounting holes in base. Mounting base shall be polyethylene. Provide brass service valves, fittings, and gauge ports on exterior of casing.

b. Electrical: Provide a single point power connection and disconnect sized as per the manufacturer's recommendation and as per NEC code requirements. See Section 822 for electrical requirements.

c. Compressor: Provide a scroll type with two speeds, a manual reset high pressure switch, and an automatic reset low pressure switch. Compressor shall be hermetically sealed, have a crankcase heater, and be mounted on a vibration isolation device.

d. Compressor Motor: Provide with thermal and current sensitive overload devices, a start capacitor, a relay, and contactor.

e. Condensing Coils: Provide with copper tubing, mechanically bonded aluminum fins, and liquid subcooler. Condensing coils shall comply with ARI 206/110be.

f. Refrigerant: R-410A.

g. Fan: Aluminum propeller type directly connected to motor.

h. Fan Motor: Permanently lubricated, with integral thermal overload protection.

i. Low Ambient Kit: Shall allow operation down to 45 ºF.

3. Thermostat: Low voltage with subbase to control compressor and evaporator fan. Shall have "heat-off-cool" and "on-auto" selector switches. All thermostat wiring shall be installed in accordance with Section 822.

a. Display: Provide Liquid-crystal display to indicate room temperature, set-point temperature, time setting, operating mode, and fan speed.

b. Automatic Reset Timer: Provide to prevent rapid cycling of the compressor.

4. Accessories:

a. Refrigerant Line Kits: Provide soft-annealed, factory cleaned, copper suction and liquid lines, dried, pressurized, and sealed. Suction line shall be factory insulated with flared fittings at both ends.

b. Condensate Drain Piping: Provide copper water tube conforming to ASTM B88, Type L, drawn tempered. Copper piping may be run in walls and ceiling spaces only. Connections shall be made wrought copper and copper alloy solder joint pressure fittings in accordance with ASME 16.22. Flux shall meet or exceed alloy grade ASTM B813.

c. Firestats: For systems with a supply air of less than 2000 cfm, provide firestats with a dust protected steel enclosure and a baked enamel finish, a relay rated to interrupt the fan motor-control circuit to de-energize the air handler on a temperature rise in excess of 125ºF, and a manual reset. Locate in the return air intake. Install in accordance with the manufacturer's instructions.

d. Duct Smoke Detectors: For systems with a supply air of greater than 2000 cfm, provide duct smoke detectors in accordance with NFPA 90A. Duct smoke detectors shall be photoelectric type in accordance with UL 268A. Provide with a weatherproof housing in accordance with NEMA 250, Type 4X; NRTL, and listed for use with the supplied detector for smoke detection in HVAC system ducts. Provide with a relay rated to interrupt the fan motor-control circuit to de-energize the air handler on the detection of smoke in the

ductwork. Locate in both the supply and return air ducts. Install in accordance with the manufacturer's instructions.

821.08.28 Split System Ductless HVAC System: Provide a unit that includes a factory test log sheet for each unit consisting of the unit tested pressures, temperatures and amperage, as tested prior to shipment.

1. Indoor Ceiling-Mounted Cassette Units (5 Tons Or Less): Where specified, provide a ceiling cassette fan coil unit, operable with R-410A refrigerant, equipped with an electronic expansion valve, for installation into the suspended ceiling with an air panel grille, and factory-tested prior to shipment. Provide each component as follows:

a. Chassis: Galvanized steel, polyethylene insulation.

b. Panel Grille: Impact-resistant polypropylene; White.

c. Outside Air Intake: Integral, side mounted.

d. Fan: Direct-drive, turbo fan type with statically and dynamically balanced impeller with high, medium, and low speeds available.

e. Refrigerant Coils: Direct expansion type, copper tubes mechanically bonded with aluminum fins; charged with dehydrated air prior to shipment from the factory.

f. Air Distribution: Four-way.

g. Filter: Long-life, washable with mildew-proof resin.

h. Condensate: 21-inch lift mechanism provided with built-in safety alarm.

i. Controls: Provide with a self diagnostic function, three minute time delay, automatic restart, emergency operation function, and test run switch.

2. Indoor Wall-Mounted Units (5 Tons Or Less): Wall-mounted fan coil unit, operable with R-410A refrigerant, equipped with an electronic expansion valve, for installation onto a wall within conditioned space, and factory-tested prior to shipment.

a. Cabinet: Galvanized steel frame, affixed to a factory-supplied wall mounting template and located in conditioned space; polyethylene insulation.

b. Fan: Direct-drive, cross-flow; statically and dynamically balanced impeller with high and low fan speeds; thermally protected.

c. Refrigerant Coils: Direct expansion type, copper tubes mechanically bonded with aluminum fins; charged with dehydrated air prior to shipment from the factory.

d. Controls: Provide with a self diagnostic function, three minute time delay, automatic restart, emergency operation function, and test run switch.

3. Outdoor Units (5 Tons Or Less): Direct expansion (DX), air-cooled heat pump, with variable speed, inverter-driven compressors. Unit shall be

factory assembled and pre-wired with all necessary electronic and refrigerant controls.

Unit shall be capable of providing heating to indoor units at 0ºF ambient temperature without additional low-ambient controls or auxiliary heat source.

The condensing unit shall automatically restart following power failure and will not cause any settings to be lost.

a. Refrigerant: R-410A.

b. Cabinet: Weatherproof; galvanized steel with corrosion-resistant baked enamel finish.

c. Fan: Direct-drive, propeller type with multiple speed operation; permanently-lubricated bearings.

d. Compressor Type: Scroll.

e. Coils: Copper tubes mechanically bonded with aluminum fins; fins shall have anti-corrosion acrylic resin.

f. Safety Devices: Provide a high pressure sensor and switch, a low pressure switch, control circuit fuses, crankcase heater, fusible plug, overload relay, inverter overload protector, thermal protector for compressor and fan motors, over current protection for inverter, and anti-recycling timers.

g. Controls: Provide zone thermostats where indicated on the drawings. Thermostat shall have "heat-off-cool" and "on-auto" selector switches, and be from the same manufacturer as the system.

System shall provide constant fan operation or automatic fan operation on both the heating and cooling cycles.

h. Air Filters: Provide factory-manufactured, gasketed, framing systems and accessories. Provide and maintain temporary air filters during construction and install permanent filters after final acceptance.

821.08.29 Circular and Rectangular Rigid Ductwork: Size and locate circular and rectangular rigid ductwork as scheduled on the plans. Ductwork shall be galvanized steel, lock forming quality, conforming to ASTM A653 having G90 coating designation.

1. Ductwork Construction and Installation: Construct ductwork in accordance with SMACNA Duct Construction Standards – Metal and Flexible based on indicated static-pressure class unless otherwise indicated.

a. Collars: Always use collars when appropriate for duct transitions.

b. Bends: Radii of bends shall not be less than 1.5 times the width of the duct on centerline unless otherwise indicated on the plans.

c. Transitions: Offset angles of transitions shall not exceed 20 degrees.

d. Dampers: Provide galvanized (G90) lockable spin-in type manual dampers for all diffuser branch lines as required for air balancing and on all

individual duct runs. Install dampers a minimum of two duct widths from branch takeoff. Provide a minimum thickness of 26 gauge galvanized steel with 2 inches extension handles.

e. Hanger Materials: Provide electro galvanized, all-thread rods. Straps and rod sizes shall be galvanized (G90) and shall comply with SMACNA's HVAC Duct Construction Standards – Metal and Flexible for steel sheet thickness and for steel rod diameters. Ductwork shall be supported so as not to crush or damage insulation.

f. General Sealant and Gasket Requirements: Surface-burning characteristics for sealants and gaskets shall be a maximum flame-spread index of 25 and a maximum smoke-developed index of 50 when tested according to UL 723; certified by an NRTL. Whether required or not by SMACNA standards, seal all joints and seams on all duct systems. Apply sealant to male end connectors before insertion and afterward to cover entire joint and sheet metal screws. Seal duct seams and joints according to SMACNA's HVAC Duct Construction Standards – Metal and Flexible for duct pressure class or nearest class requiring continuous sealing.

g. Firewall Penetrations: Where ductwork passes through fire-rated interior partitions and exterior walls, install appropriately rated fire dampers, sleeves, and fire-stopping sealant that meet or exceed NFPA requirements and as per the wall UL listing.

821.08.30 Ductwork Insulation: All ductwork shall be externally insulated. Provide insulation that is a minimum of 2-1/8 inches thick with a nominal density of 0.75 pounds/cubic foot.

1. Insulation: Provide mineral or glass fibers bonded with a thermosetting resin. Comply with ASTM C553, Type II and ASTM C1290, Type III with factory-applied FSK jacket. Insulation shall have a minimum installed thickness of 2 1/8 inches and a nominal density of 0.75 pounds/cubic foot.

2. Mineral-Fiber Adhesive: Comply with MIL-A-3316C, Class 2, Grade A.

3. ASJ Adhesive and FSK Jacket Adhesive: Comply with MIL-A-3316C, Class 2, Grade A for bonding insulation jacket lap seams and joints.

4. Mastic: Materials shall be compatible with insulation materials, jackets, and substrates; comply with MIL-PRF-19565C, Type II

5. FSK Tape: Foil-face, vapor-retarder tape matching factory-applied jacket with acrylic adhesive. Shall comply with ASTM C1136. Tape shall be minimum three inches wide, 6.5 mils thick, 90 ounces force per inch width adhesion, two percent elongation, and 40 lbf per inch width tensile strength. Precut disks or squares of FSK tape may also be used.

6. Exterior Ductwork Jacket: In addition to the external insulation, exterior ductwork shall have a weatherproof flexible jacket with SMACNA Class A seals.

821.08.31 Flexible Connectors (HVAC): Where ducts are to be fastened to the intake or discharge of an air-moving device, provide a flexible connection between the duct and fan.

1. Material: Use glass fabric, double coated with weatherproof, synthetic rubber, resistant to UV rays and ozone.
2. Minimum Weight: 24 ounces/sq yd.
3. Tensile Strength: 530 lbf/inch in the warp and 440 lbf/inch in the filling.
4. Service Temperature: Minus 50 to plus 250 ºF.
5. Compliance: Flexible connectors shall be in accordance with NFPA 45 and 90A and shall not provide pockets of stagnation or concentrations of vapor.

821.08.32 HVAC Testing, Adjusting, and Balancing: Projects containing new or renovated HVAC systems shall be balanced to the requirements set forth in this subsection. HVAC systems shall be tested, adjusted, and balanced to set the proper airflow and water flow within distribution systems, including sub mains, branches, and terminals to indicate quantities according to the specified tolerances; adjusting total HVAC systems to provide quantities indicated on the plans; measuring electrical performance of HVAC equipment; verifying automatic control devices are functioning properly, measuring sound and vibration; and reporting results of activities and procedures as specified in this subsection.

1. Quality Assurance: Provide an independent testing, adjusting, and balancing Agent (hereafter referred to as Agent) certified by either the AABC or NEBB.
2. Submittal Requirements: Provide submittals including a procedural step-by-step testing, adjusting, and balancing strategy. These submittals shall be provided to the Bridge Engineer for review on approved forms certified by the testing, adjusting, and balancing Agent. Testing, adjusting, and balancing reports shall conform to the AABC or NEBB standard form.
3. Coordination: If controls are involved on the project, the balancing Agent shall coordinate work with a control contractor to support and assist with testing, adjusting, and balancing.
4. Testing: The Agent shall perform testing and balancing procedures on each HVAC system according to the procedures contained in AABC national standards or NEBB's "Procedural Standards for Testing, Adjusting, and

Balancing of Environmental Systems." Make any adjustments and/or replacement of items such as pulleys, belts, and dampers as recommended by the Agent at no additional cost or time to the Department. The Agent shall balance the HVAC system to the following tolerances:

a. Supply Fans: 0 to plus 10 percent of the design cfm.

b. Exhaust Fans: 0 to minus 5 percent of the design cfm.

c. Air Outlets and Inlets: Plus 10 percent to minus 10 percent of the design cfm.

d. Water Flow Rates: Plus 5 to minus 5 percent of the design gpm.

5. Reports: The Agent shall submit to the Bridge Engineer a preliminary testing report for review. The report shall be marked and returned to the Agent for corrections (if any). After outstanding comments are resolved, the Agent shall submit to the Bridge Engineer a bound and typewritten final report that he/she has signed, sealed, and dated to certify the accuracy of the report. As a minimum the report shall include the following:

a. Title page that includes the name and address of the Agent; the project number, name, and location; the architect's name and address; the engineer's name and address; the report date, and the signature of Agent who certified the report.

b. A summary of the contents including design versus final performance, notable characteristics of systems, and a description of the system operation sequence if it varies from the plans.

c. List of the instruments used in the testing along with proof of calibration.

d. Pump curves, fan curves, manufacturer's test data.

e. Field quality control test reports prepared by the system and equipment installers, and other information relative to equipment performance.

f. Nomenclature sheets for each item of equipment.

g. Terminal unit data including manufacturer, model, type, size, fittings, motors, air flows, static pressures, etc.

h. Coil data including flow rates (water and air), pressure drop (water and air), etc.

i. Duct traverse reports.

j. Do not include shop drawings.

821.08.33 In Ground Basins for Sewer Lift Stations: Provide precast concrete pipe conforming to ASTM C478 for in ground lift station basins. Grout the bottom and slope to pumps. Basins shall be a minimum of 6 inches thick and shall be capable of handling geotechnical loading. Install an

attached concrete base at the bottom of the basin for both geotechnical loading and to prevent the basin from lifting out of the ground. Excavation and backfill for in ground installations shall be in accordance with Section 802. All piping and conduit into basins shall be grouted and watertight.

1. Access Hatch: Provide a heavy duty aluminum hatch for basin equipment access. The hatch shall have a minimum loading requirement of 300 psf.

2. Vent Pipes: Ventilate basin with a minimum 3 inch schedule 40 galvanized steel pipe. Vents shall have stainless steel insect screens.

821.08.34 Above Ground Basins for Sewer Lift Stations: Fabricate from ASTM A709 Grade 36 galvanized steel, minimum ¼ inch. Basin shall be mounted to withstand all IBC wind loads. All penetrations into basin shall have a watertight flange.

1. Access Hatch: Provide a heavy duty aluminum hatch for basin equipment access. The hatch shall have a minimum loading requirement of 300 psf.

2. Vent Pipes: Ventilate basin with a minimum 3-inch schedule 40 galvanized steel pipe. Vents shall have stainless steel insect screens.

821.08.35 Non-Clog Submersible Pumps for Sewer Lift Stations: Provide a factory-assembled and factory-tested sewage-pump unit with guide-rail supports. The submersible sewage pumps shall consist of the following:

1. Pump Type: Submersible, end-suction, single-stage, close-coupled, overhung-impeller, centrifugal sewage pump as defined in ANSI/HI 1.1-1.2 and ANSI/HI 1.3. Pumps shall be capable of passing 3-inch solids without clogging.

2. Pump Casing: Cast iron, with open inlet, and discharge fittings for connection to guide-rail support.

3. Impeller: Statically and dynamically balanced, stainless steel, non-clog, for solids handling, and keyed and secured to shaft.

4. Pump and Motor Shaft: Stainless steel, with factory-sealed, grease-lubricated ball bearings

5. Moisture-Sensing Probe: Internal moisture sensor and moisture alarm.

6. Motor: Hermetically sealed, capacitor-start type (if required); with built-in overload protection; lifting eye or lug; and three-conductor, waterproof power cable of length required with grounding plug and cable-sealing assembly for connection at pump.

821.08.36 Chopper Type Submersible Pumps for Sewer Lift Stations: Provide a factory-assembled and factory-tested sewage-pump unit

with guide-rail supports. The submersible sewage pumps shall consist of the following:

1. Casing and Back Pull-Out Plate: The pump casing shall be of volute design, spiraling outward to the 125 lb. flanged centerline discharge. Back pull-out design shall incorporate jacking bolts for accurate adjustment of impeller-to-cutter bar clearance. Casing and back plate shall be ductile cast iron with all water passages to be smooth, and free of blowholes and imperfections for good flow characteristics. A pressure tap shall be included on or near the discharge flange. Back plate shall include a replaceable Rockwell C 60 steel cutter adjustable for 0.005-0.015-inch clearance to cut against the rotating impeller pump out vanes for removing fiber and debris. Provide a minimum three mil MDFT epoxy coating.

2. Impeller: The impeller shall be semi-open type with pump out vanes to reduce seal area pressure. Chopping/maceration of materials shall be accomplished by the action of the cupped and sharpened leading edges of the impeller blades moving across the cutter bar at the intake openings, with a maximum set clearance between the impeller and cutter bar of 0.015-0.025 inch cold. Impeller shall be cast alloy steel heat treated to minimum Rockwell C 60 and dynamically balanced. The impeller shall be keyed to the shaft and shall have no axial adjustments and no set screws.

3. Cutter Bar Plate: The cutter bar plate shall be recessed into the pump bowl and shall contain at least two shear bars extending diametrically across the intake opening to within 0.010-0.020-inch of the rotating cutter nut tooth, for the purpose of preventing intake opening blockage and wrapping of debris at the shaft area. Chopper pumps utilizing individually mounted shear bars shall not be acceptable. Cutter bar shall be alloy steel heat-treated to minimum Rockwell C 60.

4. Cutter Nut: The impeller shall be secured to the shaft using a cutter nut, designed to cut stringy materials and prevent binding using a raised, rotating cutter tooth. The cutter nut shall be cast steel heat treated to minimum Rockwell C 60.

5. Upper Cutter: The upper cutter shall be threaded into the back pull-out adapter plate behind the impeller, designed to cut against the pump-out vanes and the impeller hub, reducing and removing stringy materials from the mechanical seal area. Upper cutter shall be cast steel heat treated to minimum Rockwell C 60. The upper cutter teeth are positioned as closely as possible to the center of shaft rotation to minimize cutting torque and nuisance motor tripping. The ratio of upper cutter cutting diameter to shaft diameter in the upper cutter area of the pump shall be 3.0 or less.

6. Shafting: Pump shafting shall be heat-treated alloy steel. The pump shaft shall be directly coupled to the motor shaft, with a bolt and keyway.

7. Submersible Electric Motor: The submersible electric motor shall be UL listed explosion proof for Class 1, Group D, Division 1 hazardous locations, rated at 3 phase, with a 1.15 service factor and Class F insulation. Motor shall be equipped with tandem, independently mounted, mechanical seals in oil bath and with dual moisture sensing probes. The inner and outer seals shall be separated by an oil-filled chamber. The oil chamber shall act as a barrier to trap moisture and provide sufficient time for a planned shutdown. The oil shall also provide lubrication to the internal seal. The inner seal shall be a standard UL listed with carbon rotating faces and ceramic stationary faces. The outer seal construction shall be designed for easy replacement. Outer mechanical seal shall be 316 stainless steel metal bellows type with silicon carbide or tungsten carbide faces. Seal shall be positively driven by set screws. Elastomers shall be two normally closed automatic resetting thermostats connected in series and imbedded in adjoining phases. Motor frame shall be cast iron, and all hardware and shaft shall be stainless steel.

8. Nameplates: Provide stainless steel or aluminum nameplates permanently attached to the pump and drive motor giving the manufacturer's model and serial number, rated capacity, head, speed, and any other pertinent data.

9. Guide Rail System: Provide a guide rail system consisting of two stainless steel guide rails, stainless steel pump guide bracket and discharge elbow with mounting feet and 125 lb flanges, an upper guide rail mounting bracket and intermediate guide brackets every 10 feet.

10. Spark Proof Guide Rail System: Provide a non-sparking guide rail system consisting of two stainless steel guide rails, cast aluminum bronze pump guide bracket, cast ductile iron discharge elbow with mounting feet and 125 lb flanges, upper guide rail mounting bracket, and intermediate guide brackets every 10 feet. System design shall prevent spark ignition of explosive gases during pump installation and removal.

11. Moisture-Sensing Probe: Provide an internal moisture sensor and moisture alarm.

821.08.37 Control Panels for Sewer Lift Stations: Provide NEMA 4X stainless steel panels with the following features:

1. Alternate between pumps for each run cycle.
2. Audible and visual high water alarms.
3. Mercury float type switch with mounting rod and electric cables.

4. External indicator lights for each pump on/off status and each pump seal failure.

5. All components, wiring, and conduit shall be in accordance with Section 822, Electrical Systems.

821.08.38 Valves for Sewer Lift Stations: Each pump and motor assembly shall have a shut-off valve and a swing check valve located above the high water alarm. Shut-off and swing check valves shall be as follows:

1. Shut-off Valves: Provide cast iron shut-off valves that conform to ASME B16.1. Valves shall be line size, Class 125, non-rising stem, and an epoxy coating.

2. Swing Check Valves: Provide cast iron swing check valves that conform to ASME B16.1. Valves shall be line size, Class 250, horizontal swing type, rated for non-clog service, and an epoxy coating.

821.08.39 Accessories for Sewer Lift Stations:

1. Lift Assembly: Provide a marine grade stainless steel lift assembly for each pump and motor.

2. Conduit Seals: Provide conduit seals on every conduit leaving the lift station basin. Seals shall be airtight, line sized, and code compliant.

821.08.40 In-Ground Sewage Treatment Facilities: Excavation and backfill for in-ground installations shall be in accordance with Section 802. Foundations shall be in accordance with Section 823.07.1, Foundations. Sewage treatment facilities shall consist of the following items:

1. General Requirements: The extended aeration sewage treatment plant shall provide primary and secondary treatment of wastewater flow.

Primary treatment shall be accomplished in the aeration chamber of the facility. All incoming wastewater shall enter and be retained in the aeration chamber for 24 hours. Air shall be introduced along one wall near the bottom to produce a mixing and rolling action in the tank.

Secondary treatment of the wastewater shall be accomplished in a clarification chamber. Mixed liquids shall flow from the aeration chamber into the clarification chamber by hydraulic displacement. The effective holding capacity of the clarifier shall be of sufficient volume to provide in excess of 4 hour retention of the daily flow.

Capability of a plant shall be certified by an independent testing laboratory. The manufacturer shall make certified data available to the regulatory agency, customer, consultant, and contractor as required.

Principal items of equipment supplied with the system shall include concrete aeration and clarification tank(s), air distribution system, air diffused system, airlift sludge return pumping system, airlift surface skimming system,

galvanized grating with bolted locking device for all tank openings, rotary blowers, motors, electrical controls, mechanical equipment housing, effluent weir trough, and all necessary internal piping and mechanical equipment. Reinforce the sewage treatment plant structure to withstand normal pressures from external soil and internal hydrostatic loads.

2. Aeration Chamber(s): Construct the clarifier of properly reinforced 5,000 psi, 28 day compressive strength concrete. Each casting shall be a monolithic unit with all four walls incorporated into the tank section. The aeration chamber(s) shall provide 24 hour retention of daily waste water flow. The chamber shall be of sufficient size to provide a minimum of 80 cubic feet of tank capacity per pound of applied BOD. Install concrete fillets in the bottom of the chamber parallel to the treatment flow to ensure uniform tank roll and prevent deposition of solids. Overall design of the chamber shall be such that effective mixing shall be maintained to provide optimum treatment.

3. Air Distribution Piping: Provide galvanized steel Schedule 40 piping and galvanized malleable iron pipe fittings throughout the air distribution system. Provide individual galvanized pipe unions, dresser couplings, and flexible couplings with stainless steel clamps in the air distribution piping as required to allow individual adjustment of each separate element within the system.

Provide primary air distribution through a galvanized air header. The air header shall have individual drop pipes connected to the header assembly for air supply to individual diffused assemblies.

Provide each drop pipe with an air brass bodied adjustment valve to control air flow individually to each diffused assembly. In addition, provide a brass bodied quick release coupling or union for each pipe diffused assembly downstream from the air adjustment.

4. Air Diffusion System: Provide diffusers parallel to the treatment flow in the aeration chamber. Install each diffuser assembly no more than 12 inches off the floor of the chamber and no more than 12 inches away from the chamber sidewall. Construct diffusers of Schedule 40 galvanized steel and design to ensure uniform mixing within the aeration chamber. Fine air bubble distribution effected by the diffusers shall be adequate to provide all oxygen necessary for the aerobic digestion process while maintaining an acceptable dissolved oxygen level in the final plant effluent.

5. Clarification Chamber: Provide a final clarification chamber for secondary treatment of the daily flow. Construct the clarifier of properly reinforced 5,000 psi, 28-day compression strength concrete.

Each casting in the clarifier shall be a monolithic unit with all four walls

incorporated into the tank section. Provide an inlet baffle zone at the flow inlet to the clarification chamber. The area contained behind the baffle shall allow adequate capacity and retention for surfacing of all buoyant material entering the clarifier. Settled sludge shall be returned to the aeration chamber by continuous airlift pumping.

6. Airlift Sludge Return: Provide an airlift sludge return pump for the hopper(s) in the clarification chamber. Air shall be supplied to the airlift(s) through a secondary air distribution system connected to the main air header of the treatment plant. Install individual air manifold piping for each airlift and equip with a brass bodied valve for fine adjustment or shut-off.

Construct the airlift(s) proper of Schedule 40 galvanized steel pipe and fittings. Install a removable clean-out plug at the top of the vertical airlift pipe. Arrange piping so that returned sludge is deposited in the aeration chamber at a point which prevents short-circuiting and with positive visible return. The airlift pump(s) shall be designed and manufactured of adequate size pipe and with sufficient air supply to provide a pumping rate in excess of the total daily flow. Provide air required to achieve this in excess of the necessary air for aeration, mixing, and treatment. Equip the airlift pump inlet(s) to achieve this. Provide stainless steel brackets to position the inlet correctly at the base of the hopper.

7. Airlift Surface Skimmer: Provide an airlift surface skimming system in the settling zone of the clarification chamber(s).

Construct the airlift skimmer(s) of Schedule 40 galvanized pipe and fittings. Equip the skimmer inlet(s) with an adjustable cone. Provide a removable galvanized cleanout plug at the top of the skimmer airlift pipe where it joins the horizontal discharge line. The discharge line shall run on top of the plant and return back to the aeration chamber for final discharge. Connect the skimmer air supply to the main air header of the treatment plant.

8. Disinfection: Disinfection of treatment plant effluent shall be done by a chlorine contact chamber. The chlorine contact chamber shall have a retention time of 15 minutes at peak hourly flow.

9. Mechanical Equipment: Provide air required for the treatment process and operation of airlifts in the clarifier by two rotary positive displacement blowers. Provide each blower unit with inlet air filter silencer(s), discharge flexible coupling connector to air header assembly, and a bronze bodied check valve on the discharge piping. Each blower shall be capable of providing all air capacity for the sewage treatment facility. Blower connection to the drive motor(s) shall be conventional v-belts power transmission drive assembly.

Motors shall be severe-duty TENV electric motor(s) used to drive the blower(s). When in operation at the rated horsepower, the motor(s) shall reach maximum speed that shall exceed 97 percent of the reference synchronous speed. The motor(s) for the facility shall be designed and rated for continuous duty applications and shall not overload or exceed motor nameplate ratings when operating as outlined for this facility.

10. Control Panel: Provide NEMA 4X stainless steel panels with the following features:

a. Alternate between blowers based on the time clock.

b. Audible and visual alarm for blower failure.

c. External indicator lights for each blower on/off status.

d. All components, wiring, and conduit shall be in accordance with Section 822, Electrical Systems.

821.08.41 Above Ground Sewage Treatment Plants: Provide a U.S. Coast Guard Certified Type II Marine Sanitation Device (MSD). Equip the aeration-type mechanical sewage treatment system with clarification and chlorination chambers, valves, blowers, and chemical injection pump. Sewer and vent piping shall be Schedule 40 ductile iron with corrosion resistant coating. Exposed PVC piping will not be allowed. The sewage treatment plant shall contain the following:

1. Construction: Marine-grade aluminum with corrosion resistant finish.
2. Fasteners: Marine-grade stainless steel.
3. Finish: Ceramic-filled epoxy coating.
4. Capacity: Minimum of 50 gallon per day.
5. Control Panel: NEMA 4X stainless steel enclosure meeting the following requirements:

a. Alternate between blowers based on the time clock.

b. Audible and visual alarm for blower failure.

c. External indicator light for blower on/off status.

d. All components, wiring, and conduit shall be in accordance with Section 822, Electrical Systems.

821.08.42 Fencing Around Sewage System: Provide a 6 feet high fence around all sewage treatment plants, lift stations, and accessories. Fence shall be as detailed on the plans. If not detailed on the plans, fence shall be in accordance with Section 705 and the Department's standard chain link fence details. Fence shall have a 3 feet wide lockable gate or a lockable double gate if access for service vehicles is needed.

821.08.43 Equipment Nameplates: Where shown on the plans or as required by the Project Engineer, all mechanical equipment shall have a

nameplate as shown on Figure 821-1. Refer to plan sheets and details for nameplate text and location. Nameplates shall be fabricated from 1/16-inch thick phenol plate engraved stock, have satin black outer layer, have white inner layer, and have 45 degree beveled edges. Nameplate wording shall have 1/4-inch or 1/2-inch size block-style letters. Nameplates shall have four 1/8-inch diameter pre-drilled holes, one at each corner, for mounting nameplate. Nameplates shall be fastened to equipment with #6-32 marine duty stainless steel self-tapping machine screws having 30,000 psi yield strength. Nameplates shall be level after installation. Any variation in nameplate size shall be submitted to the Bridge Engineer for review.

Figure 821-1, Nameplate Details

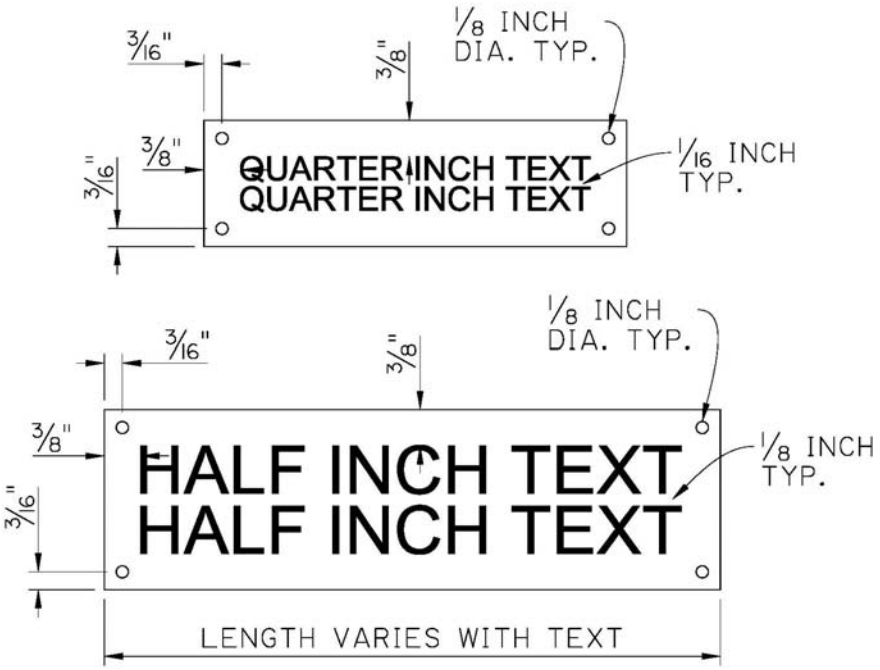

821.09 MEASUREMENT. No measurement of materials will be made; material quantities shown on the plans are for informational purposes only.

Preparing and submitting the Mechanical Operation and Maintenance Manual will not be measured for payment. The cost is to be included in the mechanical, electrical, and facility items contained in the plans.

821.10 PAYMENT. Payment for the completed and accepted items will be made at the contract lump sum price, which includes furnishing, shop and field fabricating, erecting, cleaning and painting, galvanizing, or other coating materials; furnishing all required labor, equipment and materials, tools, staging, falsework, forms, welding, bolts, and other hardware; and the performance of all work necessary to complete the item.

Cost of preparing and submitting the Mechanical Operation and Maintenance Manual shall be included in the pay items of Sections of 821, 822, and 823. The Department will retain 5 percent of the bid price of all mechanical, electrical, and facility items (821, 822, and 823 items) until the manual has been reviewed and accepted, and final paper reproductions have been received by the Department.

When changes in the work are ordered by the Project Engineer, which vary from the contract, compensation will be in accordance with 109.04.

Payment will be made under:

Item No.	Pay Item	Pay Unit
821-01	Swing Span Bridge Mechanical System (Type)	Lump Sum
821-02	Vertical Lift Bridge Mechanical System (Type)	Lump Sum
821-03	Bascule Span Bridge Mechanical System (Type)	Lump Sum
821-04	Pontoon Span Bridge Mechanical System (Type)	Lump Sum
821-05	Movable Barriers (Type)	Lump Sum
821-06	Facility Mechanical Systems (Type)	Lump Sum

Section 822
Electrical Systems

822.01 DESCRIPTION. Furnish equipment, materials, tools, and labor to purchase/fabricate, shop test, transport, install/erect, wire, align/adjust, paint, field test, and set-up electrical items/systems as specified.

822.02 ACRONYMS AND ABBREVIATIONS.

IES	Illuminating Engineering Society
NEC	National Electrical Code
NESC	National Electrical Safety Code
NFPA	National Fire Protection Association
UL	Underwriters Laboratories, Inc.

See 101.02, 801.02, and 820.02 for additional acronyms.

822.03 DEFINITIONS.

System Compatibility. System compatibility covers the overall functionality, appropriateness, and integration with all components used to make up that system and interfacing with adjacent systems or components, whether electrical or non-electrical.

See 101.03, 801.03, and 820.03 for additional definitions.

822.04 EQUIPMENT AND MATERIALS. Furnish equipment and materials suitable for the intended use with all necessary hardware and components.

References to a specific manufacturer's name and/or catalog number are intended to denote the quality and function of equipment or material and not to specifically exclude other products. When specified model or catalog numbers conflict with descriptive specifications, plans, or system compatibility, the descriptive specifications, plans, or system compatibility shall govern.

Except for those products designated as fabricated or those that are no longer produced, all specified products shall be manufactured by companies that regularly engage in the production of the specified products.

The products specified shall be specifically designed, tested, and manufactured for the purpose for which they will be used. Modification of equipment for other than design purposes will be permitted only when no currently manufactured products meet the specifications. Such modifications

shall be submitted for review to the Bridge Engineer and the manufacturer prior to purchasing equipment.

Consider all manufactured items identified on the plans by a manufacturer and a part number to be followed by the phrase "or item of equal or better quality and function."

All manufactured parts/equipment and all material for fabricated parts shall be new. Like equipment and materials shall be made by the same manufacturer.

The plans, item descriptions, and specifications do not necessarily include or define everything necessary for a complete and operational item. When required, provide any modifications, fabrications, extra hardware, and equipment necessary for the satisfactory installation and operation of the system to coordinate with other items or conditions. The cost of such provisions shall be included in the bid price.

Materials shall comply with the plans and specifications and the following sections and subsections:

Embankment	203
Drilled Shafts	803.02
Piles	804.02
Structural Concrete	805.02
Deformed Reinforcing Steel	806.02
Structural Metals	807.02
Steel Grid Flooring	808.02
Welding	809
Painting and Protective Coatings	811.02
Treated Timber	812.02
Mechanical Systems	821.03
Portland Cement Concrete	901.02
Mortar	1001.03
Reinforcing Steel	1009
Metals	1013
Stainless Steel Bolts	1013.08.3
Timber	1014
Epoxy Resin System	1017
Electrical Conduit and Conductors	1018.11

822.05 GENERAL REQUIREMENTS. By bidding on the project, the bidder affirms to having necessary knowledge and experience, to

understanding the intent of the contract, and to the obligation of providing complete, safe, and functioning electrical systems in accordance with the intent of the contract.

1. Provide personnel knowledgeable and experienced in the installation, wiring, assembly, adjustment, fabrication, and testing of the type of electrical systems specified in the contract. Although the contract documents are of sufficient detail and quality to convey the intent of the design to an experienced contractor, they do not necessarily depict every detail or specify every ancillary item required for the electrical systems to be properly installed, wired, assembled, aligned, fabricated, transported, adjusted, tested, painted, and functioning in accordance with the intent of the contract. Some drawings are diagrammatic and do not show the exact location and size of equipment. Prevent interference and conflicts and ensure system compatibility; coordinate the work as required and in accordance to the following:

2. Comply with the applicable requirements of the NEC, NFPA 70E, and UL, etc., except where superseded by applicable laws.

3. Check mounting space, equipment dimensions, and installation requirements before ordering equipment.

4. Establish the electrical circuit requirements of all equipment to be served before ordering material.

5. Where circuits are to serve specific appliances, equipment, or feeders, verify the electrical requirements and the exact location of connections before installing the service to the equipment.

If any portion of the work that is not clearly defined in the contract, or if the contract has a conflict, or if the contract appears to violate any governing laws, codes, or regulations, submit a written Request For Information (RFI) to the Project Engineer for clarification prior to proceeding with the work. Any such work performed without a completed RFI is at the contractor's risk. RFI's shall be submitted on the Department's official RFI form for review. The form can be found on the Department's website.

Use best industry practices at all times during fabrication, assembly/alignment, installation, wiring, and testing of all electrical systems.

822.06 SUBMITTALS. Prepare and submit electrical items/system submittals shown on the plans to the Bridge Engineer for review or record in accordance with 105.02.2, 801.05, 820.06, and the following:

Manufactured items/materials shall be installed in accordance with the manufacturer's recommendations and instructions unless otherwise noted on the plans. Prior to installation of manufactured items at the project site,

provide the manufacturer's written installation recommendations and instructions to the Department's Inspector/Project Engineer as requested for reference during installation.

822.06.1 Shop Drawings: Prepare and submit shop drawings for fabricated items.

For bidding purposes, allow a review period of 14 calendar days per submittal for submittals consisting of 15 or less cut sheets. For submittals containing more than 15 cut sheets, allow a review period of 14 calendar days per 15 sheets submitted rounded up (e.g. ,16 to 30 sheets equals a 28 calendar day review). Review periods for separate submittals are not concurrent.

Submit a shop drawing submittal schedule to the Bridge Engineer prior to the preconstruction conference.

For drawings returned for correction, place a cloud shaped outline around each change and note changes in the revision block. Resubmit to the Bridge Engineer for review. Any submittal with unmarked or unnoted changes will be returned without review. This process will repeat until the drawing is accepted.

822.06.1.1 Detail Sheets: Submit detail sheets for each fabricated electrical item. Detail sheets shall show all views, dimensions, tolerances, fits, finishes, welds, materials, etc. required to fabricate an individual item. Include estimated weight (mass) for each fabricated item.

822.06.1.2 Assembly Sheets: Submit assembly sheets for electrical assemblies. Show how groups of electrical parts are to be assembled, and where electrical assemblies are located on the project. Show manufactured items, their pertinent dimensions, and estimated weights.

Submit assembly sheets, related detail sheets, and related cut sheets for manufactured items at the same time. Assembly sheets will not be accepted until all items that make up the assembly have been accepted.

822.06.2 Manufacturer Information Sheets (Cut Sheets): Prepare and submit cut sheets for all manufactured items. Cut sheets must be of good quality and easily readable. Poor quality can be reason for rejection.

Stamp each sheet of each submittal with the project name, project number, parish name, and contractor's name. Include the manufacturer's name if not already shown on the cut sheet and the electrical item number assigned for the item on the plans.

Pertinent ratings, sizes, features, or any other data specified on the plans must be indicated on the cut sheet with an arrow or other such mark. Do not use highlight markers.

Cross out all items on a cut sheet that are not specifically being submitted.

Include the manufactured item's warranty information if the warranty extends beyond the contractor's guarantee period. Always include documentation for extended warranties that were required to be purchased for the contract.

822.06.2.1 Cut Sheet Submittal Procedure: Submit cut sheets electronically to the Bridge Engineer for review. The electronic file shall be a single, color, Portable Document Format (PDF) file.

For bidding purposes, allow a review period of 14 calendar days per submittal for submittals consisting of 25 or less cut sheets. For submittals containing more than 25 cut sheets, allow a review period of 14 calendar days per 25 sheets submitted rounded up (e.g., 26 to 50 sheets equals a 28 calendar day review). Review periods for separate submittals are not concurrent.

After review, rejected cut sheets will be stamped "Returned for Correction", will be initialed and dated by the reviewer, will have comments marked in red, and will be returned electronically. Correct submittal and resubmit electronically to the Bridge Engineer for review. This process will repeat until the Department has no comments. Submittals will then be stamped "Accepted in accordance with LSSRB 105.02," initialed and dated by the reviewer, and distributed electronically by the Department.

822.06.3 Color and Material Samples: Prepare and submit color and material samples for review as indicated in the contract.

822.06.4 Equipment Settings: Prepare and submit sheets that list electrical items that contain electrical set points or configurations. Clearly list the set point values and any other adjustable configurations associated with electrical items. These sheets should not be prepared until electrical items have been installed and tested.

822.06.5 Electrical Record Drawings: Electrical Record Drawings shall become part of the final estimate package and submitted for archiving. They shall consist of the following:

1. Original, full scale, electrical contract plan sheets and change order sheets. These sheets shall have the Project Engineer's signature certifying that the drawings are As-Built.
2. All reviewed and stamped "Electrical Shop Drawings."
3. Any electrical contract plan sheets (full scale) that have been marked to indicate construction changes ("As Built" sheets). These sheets shall have the Project Engineer's signature certifying that the changes are accurate.

822.06.6 Electrical Operation & Maintenance Manual: Prepare and submit an Electrical Operation & Maintenance Manual. Comply with Sections 801, Subsection 820.06.2 and the following:

Cost of preparing and submitting the Electrical Operation and Maintenance Manual shall be included in the pay items of Sections 821, 822, and 823. The Department will retain 5 percent of the bid price of all mechanical, electrical, and facility items (821, 822, and 823 items) until the manual has been reviewed and accepted, and final paper reproductions have been received by the Department.

Sheets included in the manual must be of good print quality and easily readable. Poor quality can be reason for rejection. Sheets with color must be scanned/printed in color.

Drawings reduced for the manual shall be a true 50 percent reduction and maintain scalability.

As a minimum, the *Electrical Operation and Maintenance Manual* will contain the following:

1. A title sheet showing "Louisiana Department of Transportation and Development," *"Electrical Operation & Maintenance Manual"*, the project name, project number, parish name, the year the project was completed, and the name of the General and Electrical Subcontractors and contact information for each.

2. A "Sequence of Operations" section that contains sheets with numeric lists of steps required for normal, partial, and fault clearing operation of the electrical and electro/mechanical systems. Material for this section will be provided by the Department.

3. A "Shop Drawings" section that contains all electrical Shop Drawing sheets. Generate from the original PDF files reviewed by the Department and stamped with the "Accepted in accordance with LSSRB 105.02" stamp, the reviewer's initials, and the date of the review. Format for printing 11 inch x 17 inch.

4. A "Cut Sheets" section that contains all electrical cut sheets. Generate from the original PDF files reviewed by the Department and stamped with the "Accepted in accordance with LSSRB 105.02" stamp, the reviewer's initials, and the date of the review.

5. An "Equipment Settings" section that contains all of the electrical equipment settings sheets. Generate from the PDF files that were reviewed by the Department and stamped with the "Accepted in accordance with LSSRB 105.02" stamp, the reviewer's initials, and the date of the review.

6. An “As Built” section that contains all electrical “As Built” sheets containing the Project Engineer’s signature. Scan at high quality from the full size original and format for printing 11 inch x 17 inch.

7. A “Warranties” section that contains warranty information for manufactured items. Generate from the original PDF files reviewed by the Department and stamped with the “Accepted in accordance with LSSRB 105.02” stamp, the reviewer’s initials, and the date of the review. Include the contractor’s warranty as specified in section 104.05.

8. Any other information that is pertinent to the operation and maintenance of the electrical system.

822.06.6.1 Electrical Operation & Maintenance Manual Submittal Procedure: Submit the Electrical Operation & Maintenance Manual electronically to the Bridge Engineer for review. The electronic file shall be a single, color, Portable Document Format (PDF) file, and shall be organized and formatted to present itself as a finished *Electrical Operation & Maintenance Manual*. For bidding purposes, allow a review period of 24 calendar days.

The entire *Electrical Operation & Maintenance Manual* will be considered one item. Only the title sheet shall be stamped “Returned for Correction” or “Accepted in accordance with LSSRB 105.02.”

If the *Electrical Operation & Maintenance Manual* is rejected after review, the title sheet will be stamped “Returned for Correction”, initialed and dated by the reviewer, will have comments marked in red, and returned electronically. Correct submittal and resubmit electronically to the Bridge Engineer for review. This process will repeat until the Department has no comments. For bidding purposes, allow a review period of 24 calendar days for each iteration. The title sheet will then be stamped “Accepted in accordance with LSSRB 105.02,” initialed and dated by the reviewer, and distributed electronically by Bridge Design.

822.06.6.2 Electrical Operation & Maintenance Manual Hard Copies: After the electronic submittal process has been completed, provide two color hard copies of the manual to the Bridge Engineer for review.

Print hard copy sheets from the original reviewed and accepted PDF file. All reviewed sheets shall show the “Accepted in accordance with LSSRB 105.02” stamp, the initials of the reviewer, and the date reviewed.

Provide each manual with a white, premium, heavy duty, 3 D ring binder with title sleeve. Binders shall be appropriately sized to hold enclosed material, but not larger than 3 inches. Use multiple binders if necessary.

Provide an 8-1/2-inch x 11-inch tab index divider with labeled tab to delineate sections.

822.07 SHOP REQUIREMENTS. Fabrication of parts shall conform to applicable fabrication ANSI, ISO, ASTM, ASME, SAE, etc. Standards. Conform to Section 821, "Mechanical Systems."

822.08 FASTENERS.

822.08.1 Stainless Steel Bolts, Nuts, and Washers

Unless otherwise specified on the plans, use and install stainless steel fasteners for electrical parts/equipment in accordance with 821.07.8.

822.09 SYSTEMS TESTING. Furnish all testing equipment and conduct the tests required by the contract. Provide a copy of the test results to the Bridge Engineer for review.

822.09.1 Performance Tests: Conduct performance testing of equipment for a minimum period of two weeks before final acceptance. Allow for normal operation of the equipment during the performance testing period. When normal operation proves insufficient to adequately test the equipment, artificial cycling or continuous "on" periods will be required. Correct any defective equipment, materials, and workmanship.

822.09.2 Receptacle Tests: After completion of the electrical system, test each receptacle for proper polarity and continuity of the ground.

822.09.3 Special Tests: Conduct special tests as required by the Bridge Engineer or Project Engineer when electrical equipment or systems are suspected of improper operation, or when additional data is necessary to determine proper operation.

822.09.4 Insulation Tests: Conduct insulation resistance tests on direct buried conductors and other AWG No. 10 and larger conductors. Perform tests after installing the conductors and before connecting equipment that may be damaged by the tests. When measured with a 1000 volt D.C. insulation tester, readings below 50 megohms, will be considered defective.

822.10 ELECTRICAL SERVICE. Make arrangements with the power company for temporary and permanent electrical service; verify the exact location and points of attachment before installation.

822.10.1 Temporary Service: Temporary electrical service including power usage and installation shall be included in the price bid for the item.

822.10.2 Permanent Service: The Department will pay the power

company for line extensions if such extensions are not the result of contractor errors or failure to verify or coordinate with the power company. Power usage during construction and testing shall be included in the price bid for the item.

822.11 MEASUREMENT. Preparing and submitting the Electrical and Operation Manual will not be measured for payment. The cost is to be included in the electrical items contained in the plans.

Preparing and submitting the Electrical Operation and Maintenance Manual will not be measured for payment. The cost is to be included in the mechanical, electrical, and facility items contained in the plans.

822.11.1 Trenching and Backfilling: Trenching and backfilling will be measured by the linear foot of trench excavated and backfilled, which will include excavation, backfilling, and any required compaction.

822.11.2 Conduit with Conductors: Conduit with conductors will be measured by the linear foot of conduit, which will include furnishing and installing conduit, conductors, clamps, fittings, flexible metal conduit, and miscellaneous hardware required for conduit installation.

822.11.3 Conductors: Conductors in existing conduits will be measured by the linear foot of conductors furnished and installed, which will include connectors, terminations, and wire markers.

822.11.4 Jacked or Bored Casing: Jacked or bored casings will be measured by the linear foot of casing furnished and installed, which will include the casing, fittings, and required excavation and backfill.

822.11.5 Light Pole: Light poles will be measured per each pole furnished and installed which will include the pole, decals, ownership plate, wiring and connections to circuit conductors, base assembly, grout, and oxide-inhibiting compound. Measurement for ground mounted poles will also include the concrete foundation, concrete apron, underground junction boxes in apron, anchor bolts, reinforcing steel, conduits in foundation, ground rod, ground wires, ground clamp, excavation, backfill, and disposal of excess excavated material.

822.11.6 High Mast Poles: High mast poles will be measured per each pole furnished and installed, which will include the pole, luminaire ring, lowering assembly, drive assembly, grounding, wiring, electrical connections, fuses, mounting hardware, and grout. Measurement for ground mounted poles will also include the concrete foundation, concrete apron, underground junction box in apron, anchor bolts, reinforcing steel, conduit in foundation, ground rod, excavation, backfilling, disposal of excess excavated material, and all hardware and appurtenances required for a complete installation.

822.11.7 Luminaire: Luminaires will be measured per each which will include the luminaire, ballast, lamp, fuse, lightning arrestor, mounting, connections, and hardware.

822.11.8 Electrical Service Points: Electrical service points will be measured per each, which will include the pole, controller assembly, footing, anchor bolts, ground rod, conduits in footing, rigid conduit and conductors on utility company pole connections, hardware, and all equipment as shown on the plans.

822.11.9 Electrical System: Electrical systems will be measured on a lump sum basis, which will include furnishing and installing all equipment and apparatus, and performing all work required for a complete and operational electrical system.

822.11.10 Fabricated Light Pole Supports: Fabricated light pole supports will be measured per each, which will include fabrication and installation of the support, concrete anchors, anchor bolts and nuts, and grout.

822.11.11 Removal and Disposal of Electrical Equipment: The removal of existing electrical equipment as indicated on the plans will be measured as a lump sum, which will include the disconnecting of wiring at the source, the removal of exposed conduit and wiring, and the removal of associated electrical equipment. Measurement for outside systems will include the removal of structure mounted conduit, wire clamps, junction boxes, and underpass luminaires; the removal of service poles and equipment; the removal of conduit risers and the demolition of underground manholes to 24 inches below grade; the removal of underground junction boxes; the backfilling to grade of all voids; and the disposal of material and equipment declared not salvageable. Disposal of such non-salvageable material and equipment shall be in accordance with 202.05 as appropriate.

822.11.12 Removal and Storage of Light Poles: Removal of existing light poles and arms or lowering device will be measured per each pole, which will include the disconnection of wiring at the source; the removal and transporting of the pole and arms or lowering devices to the specified District compound; the furnishing of 6 inch x 6 inch treated timbers as spacers, and the stacking of the equipment as directed.

822.11.13 Removal and Disposal of Light Pole Foundations: Removal of existing light pole foundations will be measured per each foundation, which will include the removal and disposal of the complete concrete foundation and apron; the backfilling to grade of all voids; and the removal or abandonment of underground wiring to the pole.

822.11.14 Removal and Disposal of Luminaires: Removal and disposal of existing luminaires will be measured per each luminaire, which will include removal and the disposal of the luminaire and lamp. Disposal shall be in accordance with 202.05 as appropriate.

822.11.15 Relocate Light Poles: Relocation of existing light poles will be measured per each pole, which will include disconnection of the wiring at the source; the removal or abandonment of underground wiring to the pole; the removal and storage of existing pole and luminaire; the complete removal and disposal of existing foundation and apron; the backfilling of

existing foundation void; the re-installation of the existing pole and luminaire; the construction of a new foundation with apron and junction box; the installation of new ground rod, fused connectors, and pole wiring.

822.11.16 Underground Junction Box: Underground junction boxes will be measured per each box installed, and will include the box, cover, concrete pad, rigid steel conduits, ground rod bonding, splices, and all other materials and equipment required for a complete installation.

822.11.17 Structure Junction Box: Structure junction boxes will be measured per each box installed, and will include the box, cover, mounting hardware, shims, terminal blocks, fittings, bonding, and any material and equipment required for a complete installation.

822.11.18 Service Pole: Service poles will be measured per each, and will include the pole conduit and conductors on pole, fittings, conduit clamps, ground rod, hardware, and all equipment as shown on the plans.

822.11.19 Modular Breakaway Cable System: Modular breakaway electrical cable systems for low mast light poles will be measured per each and will include all materials, labor, equipment, and tools necessary to furnish and install a complete system in accordance with the plans and specifications.

822.11.20 Disconnect: Disconnects will be measured per each.

822.11.21 Duct Markers: Duct markers will be measured per each.

822.11.22 Underground Marker Tape: Marker tape will be measured per linear foot.

822.12 PAYMENT. Payment for electrical work will be made at the contract unit prices and will include all materials, labor, equipment, tools necessary to furnish, construct, and/or install this item in accordance with the plans and specifications.

The concrete in foundations for light poles, high mast poles, and other electrical equipment will be identified by lots and shall be subject to pay adjustments in accordance with Table 901-4 and note 1 therein. Size, sampling, and testing of each concrete lot shall be in accordance with the Materials Sampling Manual.

Cost of preparing and submitting the Electrical Operation and Maintenance Manual shall be included in the pay items of Sections 821, 822, and 823. The Department will retain 5 percent of the bid price of all mechanical, electrical, and facility items (821, 822, and 823 items) until the manual has been reviewed and accepted, and final paper reproductions have been received by the Department.

Payment will be made under:

Item No.	Pay Item	Pay Unit
822-01	Trenching and Backfilling	Linear Foot
822-02	Conduit with Conductors (Type)	Linear Foot
822-03	Conductors	Linear Foot
822-04	Jacked or Bored Casing (Type)	Linear Foot
822-05	Light Pole (Type)	Each
822-06	High Mast Pole (Type)	Each
822-07	Luminaire (Type)	Each
822-08	Electrical Service Point (Type)	Each
822-09	Electrical System	Lump Sum
822-10	Fabricated Light Pole Support	Each
822-11	Removal and Disposal of Electrical Equipment	Lump Sum
822-12	Removal and Storage of Light Pole (Type)	Each
822-13	Removal and Disposal of Light Pole Foundation (Type)	Each
822-14	Removal and Disposal of Luminaire	Each
822-15	Relocate Light Poles (Type)	Each
822-16	Underground Junction Box (Type)	Each
822-17	Structure Junction Box (Type)	Each
822-18	Service Pole	Each
822-19	Modular Breakaway Cable System	Each
822-20	Disconnect (Type)	Each
822-21	Duct Marker (Concrete)	Each
822-22	Underground Marker Tape (Type)	Linear Foot

Section 823
Facilities

823.01 DESCRIPTION. This section sets forth general architectural requirements for the construction of new Department facilities and/or renovation of existing Department facilities.

823.02 ACRONYMS AND ABBREVIATIONS. See 821.02 for acronyms and abbreviations.

823.03 DEFINITIONS. See 821.03 for definitions pertaining to this section.

823.04 MATERIALS. All material for fabricated items shall be new, and all manufactured items shall be new.

Embankment	203
Fences	705
Jacked or Bored Pipe	728
Drilled Shafts	803
Piles	804
Structural Concrete	805
Reinforcement	806
Structural Metals	807
Steel Grid Flooring	808
Welding	809
Painting and Protective Coatings	811
Treated Timber	812
Deck Drainage Systems	816
Mechanical Systems	821
Electrical Systems	822
Portland Cement Concrete	901
Mortar Cement	1001
Reinforcing Steel, Strand, and Wire Rope	1009
Metals	1013
Epoxy Resin System	1017

823.05 GENERAL REQUIREMENTS. See 821.05 for General Requirements pertaining to this section.

823.06 SUBMITTALS. See 821.06 for Submittal specifications.

823.07 FACILITY ARCHITECTURAL SPECIFICATIONS.

823.07.1 Foundations: Slab foundations shall apply to any structures such as buildings, sewer treatment plants, lift stations, HVAC equipment pads, etc. Operator's house first floor slabs shall be as specified in the structural plan sheets.

1. Concrete**:** All concrete for architectural and mechanical foundations shall be Class A in accordance with Section 901.

2. Vapor Retarder: All foundations for conditioned and/or enclosed structures shall receive a continuous ASTM E1745, Class A, sheet vapor retarder. Include the manufacturer's recommended adhesive or pressure-sensitive tape.

3. Reinforcing Steel: All deformed reinforcing steel for architectural and mechanical foundations shall comply with Section 806.

823.07.2 Concrete Masonry Unit (CMU) Blocks: Concrete masonry unit blocks shall contain an integral water repellent. Blocks shall be textured. Blocks and mortar color shall match. The exterior of the blocks and mortar shall be sealed in accordance with the block manufacturer's recommendations. Custom colors for both blocks and mortar shall be provided at no additional cost to the Department.

1. CMUs: Comply with ASTM C90. CMUs shall contain integral liquid polymeric water repellant. Admixture shall not reduce flexural bond strength for exposed units.

a. Unit Compressive Strength: Provide units with minimum average net-area compressive strength of 3,950 psi. Density Classification shall be lightweight as specified under ASTM C90.

b. Pattern and Texture: Standard pattern, split-face finish. Match Design Engineer's samples. The manufacturer's full range of colors shall be available at no additional cost.

2. Reinforcement:

a. Steel Reinforcing Bars: Hot-dip galvanized, ASTM A615 or ASTM A996, Grade 60.

b. Masonry Joint Reinforcement, General: ASTM A951.

c. Wire Size for Side Rods: 0.187-inch diameter.

d. Wire Size for Cross Rods: 0.187-inch diameter.

e. Wire Size for Veneer Ties: 0.187-inch diameter.

f. Spacing of Cross Rods, Tabs, and Cross Ties: Not more than 16 inches on centers.

g. Minimum Rod Lengths: Provide in lengths of not less than 10 feet.

3. Embedded Flashing Materials: Provide metal flashing complying with SMACNA's "Architectural Sheet Metal Manual" and as follows:

a. Metal Drip Edge: Fabricate from stainless steel. Extend at least 3 inches into wall and 1/2 inch out from wall, with outer edge bent down 30 degrees and hemmed.

b. Metal Sealant Stop: Fabricate from stainless steel. Extend at least 3 inches into wall and out to exterior face of wall. At exterior face of wall, bend metal back on itself for 3/4 inch and down into joint 1/4 inch to form a stop for retaining sealant backer rod.

c. Copper-Laminated Flashing: Provide 5-oz./sq. ft. copper sheet bonded between two (2) layers of glass-fiber cloth. Use only where flashing is fully concealed in masonry.

4. Adhesives, Primers, and Seam Tapes for Flashings: Use flashing manufacturer's standard products or products recommended by flashing manufacturer for bonding flashing sheets to each other and to substrates.

5. Colored Mortar for CMU Blocks: Packaged dry blend of Portland cement and hydrated lime and mortar pigments, all complying with the following requirements and containing no other ingredients. Portland cement shall conform to ASTM C150, Type I or II, except Type III may be used for cold-weather construction. Provide natural color or white cement as required to produce mortar color specified on plans. Hydrated lime shall comply with ASTM C207, Type S. Aggregate for colored-mortar shall comply with ASTM C144, natural sand or crushed stone of color necessary to produce required mortar color. Mortar pigments shall be natural and/or synthetic iron oxides and chromium oxides, compounded for use in mortar mixes and complying with ASTM C979. Use only pigments with a record of satisfactory performance in masonry mortar. Packaged dry mortar blend shall be mixed at the project according to ASTM C270, Type S.

6. Masonry Lintels: Built-in-place masonry lintels shall be made from bond beam CMUs with reinforcing bars placed as indicated and filled with Class A concrete.

823.07.3 Structural Steel Framing: In addition to the information in this section, all structural steel framing and welding shall, as a minimum, meet the specifications in Sections 807 and 809.

1. Materials: Provide the following for each item:

a. W-Shapes: ASTM A709, Grade 50; hot-dipped galvanized.

b. Channels, Angles: ASTM A709, Grade 50; hot-dipped galvanized.

c. Plate and Bar: ASTM A709, Grade 50; hot-dipped galvanized.

d. Cold-Formed Hollow Structural Sections: ASTM A500, Grade B, structural tubing; hot-dipped galvanized.

e. Steel Pipe: ASTM A53, Type E or Type S, Grade B; hot-dipped galvanized.

2. Bolts, Connectors, and Anchors:

a. Zinc-Coated High-Strength Bolts: ASTM A325, Type 1, heavy-hex steel structural bolts; zinc mechanically deposited.

b. Zinc-Coated High-Strength Nuts: ASTM A563, Grade DH heavy-hex carbon-steel nuts; zinc mechanically deposited.

c. Zinc-Coated High-Strength Washers: ASTM F436, Type 1, hardened carbon-steel washers; zinc mechanically deposited.

3. Fabrication: Fabricate and assemble in shop to greatest extent possible. Fabricate according to AISC 303, "Code of Standard Practice for Steel Buildings and Bridges," and to AISC 360.

4. Shear Connectors: Prepare steel surfaces as recommended by the manufacturer of shear connectors. Use automatic end welding of headed-stud shear connectors according to AWS D1.1 and manufacturer's written instructions.

5. Examination: Verify, with certified steel erector present, elevations of concrete and masonry-bearing surfaces and locations of anchor rods, bearing plates, and other embedment for compliance with requirements.

Proceed with installation only after unsatisfactory conditions have been corrected.

6. Erection: Set structural steel accurately in locations and to elevations indicated and according to AISC 303 and AISC 360.

Maintain erection tolerances of structural steel within AISC 303, "Code of Standard Practice for Steel Buildings and Bridges."

823.07.4 Storefront Systems and Windows: Meet all storefront system and window requirements below unless IBC requirements are more stringent, in which case IBC will govern. Doors attached to storefront systems shall be from the same storefront manufacturer and shall meet all IBC requirements.

1. Design: Provide a framing system that includes anchorage. Must be capable of withstanding wind load design pressures for the location as specified in the IBC and ASCE 7. Windows shall also be rated for small/large missile debris impact in accordance with ASTM E1996 and ASTM E1886

where required by the IBC. Each framing member shall provide structural strength to meet specified performance requirements. Reference to tolerances for wall thickness and other cross-sectional dimensions of storefront members are nominal and in compliance with AA aluminum standards and data.

2. Materials: Framing and components shall be of aluminum alloy and temper recommended by manufacturer for type of use and finish indicated.

a. Sheet and Plate: ASTM B209.

b. Extruded Bars, Rods, Profiles, and Tubes: ASTM B221.

c. Extruded Structural Pipe and Tubes: ASTM B429.

d. Structural Profiles: ASTM B308.

e. Thermal Transmittance (U-factor): Fixed glazing and framing areas shall have U-factor of not more than 0.45 Btu/sq. ft. x h x degrees F as determined according to NFRC 100.

f. Solar Heat Gain Coefficient: Fixed glazing and framing areas shall have a solar heat gain coefficient of no greater than 0.47 as determined according to NFRC 200.

g. Sealants: Sealants shall be in accordance with storefront system manufacturer's recommendations and approved by manufacturer to meet or exceed the IBC wind load requirements of the building.

3. Finish/Color of Framing: Provide framing with anodic finish, AAMA 611, AA-M12C22A42/A44, Class I, 0.018 mm or thicker. Submit a color chart with the manufacturer's full selection of colors to the Bridge Engineer for color selection. Make the full range of colors available at no additional cost to the Department. Finish shall have a two year warranty from the date of final acceptance.

4. Glazing – Tinted Glass: Provide 1 inch thick minimum glazing for storefront systems. Use low-E-coated, tinted, insulating laminated glass. Submit a color chart with the manufacturer's full selection of tint colors to the Bridge Engineer for color selection. Make the full range of colors available at no additional cost to the Department.

a. Minimum Thickness of Outdoor Lite: 6 mm.

b. Outdoor Lite: Tinted heat-strengthened float glass.

c. Interspace Content: Air.

d. Indoor Lite: Clear laminated glass with two plies of heat-strengthened float glass.

e. Minimum Thickness of Each Glass Ply: 6 mm.

f. Interlayer Thickness: 0.090 inch (if required by IBC for windborne debris).

g. Low-E Coating: Pyrolytic or sputtered on second or third surface.

h. Winter Nighttime U-Factor: 0.45 maximum.

i. Summer Daytime U-Factor: 0.48 maximum.

j. Visible Light Transmittance: 45 percent minimum.

k. Solar Heat Gain Coefficient: 0.47 maximum.

l. Manufacturer's Warranty Period: 10 years minimum from date of final acceptance regardless of any beneficial use gained by the department prior to the final acceptance date.

5. Glazing – Spandrel Glass: Provide 1-inch thick minimum glazing for storefront systems. Use ceramic-coated, tinted, insulating laminated spandrel glass. Submit a color chart with the manufacturer's full selection of colors to the Bridge Engineer for color selection. Make the full range of colors available at no additional cost to the Department.

a. Coating Color: Opaque; as indicated on the Drawings.

b. Minimum Thickness of Each Glass Lite: 6 mm.

c. Outdoor Lite: Tinted heat-strengthened float glass.

d. Interspace Content: Air.

e. Indoor Lite: Clear laminated glass with two plies of heat-strengthened float glass.

f. Minimum Thickness of Each Glass Ply: 6 mm.

g. Interlayer Thickness: 0.090 inch (if required by IBC for windborne debris).

h. Winter Nighttime U-Factor: 0.45 maximum.

i. Summer Daytime U-Factor: 0.48 maximum.

j. Manufacturer's Warranty Period: 10 years minimum from date of final acceptance regardless of any beneficial use gained by the department prior to the final acceptance date.

6. Accessories:

a. Fasteners: Use stainless steel fasteners approved by the manufacturer for use in the framing system.

b. Gaskets: Glazing gaskets shall be extruded EPDM rubber.

c. Perimeter Anchors: Use aluminum perimeter anchors unless shown otherwise on the plans. If steel anchors are used, provide insulation between steel material and aluminum material to prevent galvanic action in accordance with the manufacturer's recommendations.

d. Thermal Break: Provide a thermal break in accordance with AAMA TIR-A8 and test in accordance with AAMA 505.

7. Fabrication: Fabricate components according to manufacturer's installation instructions and with minimum clearances and shim spacing around perimeter of assembly, yet enabling installation and dynamic

movement of perimeter seal. Accurately fit and secure joints and corners. Make joints flush, hairline, and weatherproof.

Prepare components to receive anchor devices. Fabricate and install anchors. Arrange fasteners and attachments to conceal from view.

8. Installation: Install framing system in accordance with manufacturer's instructions and AAMA storefront and entrance guide specifications manual.

a. Dissimilar Materials: Provide separation of aluminum materials from sources of corrosion or electrolytic action contact points.

b. Weather Tight Construction: Install sill members and other members in a bed of sealant or with joint filler or gaskets, to provide weather tight construction. Coordinate installation with wall flashings and other components of construction.

c. Attachment/Alignment: Attach to structure to permit sufficient adjustment to accommodate construction tolerances and other irregularities. Provide alignment attachments and shims to permanently fasten system to building structure. Align assembly plumb and level, free of warp and twist. Maintain assembly dimensional tolerances aligning with adjacent work.

d. IBC Requirements: Secure the storefront or window systems to the building in accordance with the manufacturer's instructions in order to meet all IBC requirements.

9. Quality Assurance Qualifications:

a. Installer Qualifications: Installer shall have a minimum of 5 years experience installing storefronts similar to this project.

b. Manufacturer Qualifications: Manufacturer shall be capable of providing field service representation during construction, approving acceptable installer and approving application method.

823.07.5 Pre-Engineered Metal Roofing Systems: This Work shall include all labor, material, and equipment necessary for the design, fabrication, and erection of a pre-engineered metal roofing system as shown on the plans and specified herein. The building shall include all primary and secondary structural framing members, connections to the building structure, roofing, soffits, trim, caulk, sealant tape, accessories, and any other component part or material as required by the plans and specifications or the roofing manufacturer's system. The nominal size and slope of the roof shall be as shown on the plans. All materials shall be new, free from defects, and fabricated and erected in a good, workmanlike manner.

1. Submittals for Metal Roof Systems: Submit the metal roof system to the Bridge Engineer for review.

a. Piece Marked Erection Drawings: Include roof size; design loads; type of construction; material and gage of roofing; and type, quantity, and location of accessories.

b. Design Certification: Submit a Letter of Certification with a licensed Louisiana Engineer's seal, signed and dated.

c. Framing Assembly Drawings: Show roof framing; roof panels; connections to the building structure, flashing, and accessory installation details.

2. Delegated Design: Design light gage metal roof truss, fasteners, and connections to the main building structure, using a comprehensive engineering analysis performed by a qualified professional engineer licensed in Louisiana. Use performance requirements and design criteria complying with IBC and ASCE 7.

a. Structural Steel Sections and Welded Plate Members: Design in accordance with AISC "Specification for Structural Steel Buildings," current adopted edition.

b. Cold Formed Structural Members and Roofing Panels: Design in accordance with AISI "Specifications for the Design of Light Gage Cold-Formed Steel Structural Members," current adopted edition.

c. Wind, Snow, Seismic, and Live Loads: Follow procedures as prescribed in the MBMA "Low Rise Building Systems Manual" and the IBC. Magnitudes of wind loads shall be as specified by local codes or other governing bodies.

d. Roofing and Soffit Panels: Use 0.040 inch minimum aluminum ribbed panels with a three-coat fluoropolymer conforming to AAMA 620. Fluoropolymer finish shall contain not less than 70 percent PVDF resin by weight in both color coat and clear topcoat.

e. Sealing for Flashing and Other Areas: Use pressure sensitive weather sealant tape in strict accordance with the manufacturer's recommendations.

f. Roofing Fasteners: Construct the roofing system with all fasteners concealed. Coat all exposed fasteners to match the roof color. Exposed fasteners shall be lifetime fasteners.

g. HVAC and Electrical Equipment: Roofing manufacturer shall coordinate roof design with HVAC and electrical equipment. Subcontractors shall ensure no conflicts with their equipment.

h. Roof Penetrations: All roof penetrations and/or items attached to the roofing system shall be done in strict accordance with the manufacturer's

recommendations. Penetrations or attachments shall be done in a manner to not invalidate the roofing warranty.

3. Awnings: Center awnings over the doorways. Awnings shall be supplied by the roofing manufacturer. The canopy shall be of like-material as the roof and shall meet all IBC wind load requirements. If a metal roofing system is not installed on the structure, the awning shall follow the specifications for the roofing system described herein.

4. Flashings, Closures, Soffits and Trim: Install to meet all IBC requirements.

a. Flashing and Trim: Apply at the corners, and eaves, and wherever necessary to provide a finished appearance.

b. Flashing, Trim, Soffits and Cap: Furnish and apply the same paint system as required for the panels.

c. Roofing Panels and Trim: Provide under all exposed porch and/or soffit areas.

5. Accessories: Use industry standard gutters and downspouts as supplied by the roofing manufacturer meeting all IBC requirements.

6. Guarantees, Certifications, and Warranties:

a. Special Warranty on Panel Finishes: Provide the manufacturer's standard form in which the manufacturer agrees to repair finish or replace metal panels that show evidence of deterioration of factory-applied finishes within specified warranty period. Warranty shall be a minimum of 30 years from date of final acceptance regardless of any beneficial use gained by the department prior to the final acceptance date.

b. Weather Tightness Warranty: Manufacturer's standard form in which manufacturer agrees to repair or replace standing-seam metal roof panel assemblies that fail to remain weather tight, including leaks, within specified warranty period. Warranty shall be a minimum of 20 years from date of final acceptance regardless of any beneficial use gained by the department prior to the final acceptance date.

823.07.6 Built-Up Roofing Systems:

1. SBS Modified Bituminous Membrane Roofing: Section includes SBS modified bituminous membrane roofing, taper insulation, and roof insulation.

Install roof in accordance with the NRCA roofing and waterproofing manual as well as the SMACNA architectural sheet metal manual.

Provide installed roofing membrane and base flashings that remain watertight, do not permit the passage of water, and resist specified uplift pressures, thermally-induced movement, and exposure to weather without failure.

Provide roofing materials that are compatible with one another under conditions of service and application required, as demonstrated by the roofing manufacturer based on testing and field experience.

All roof penetrations and/or items attached to the roofing system shall be provided in strict accordance with the manufacturer's recommendations and shall not invalidate the roofing warranty.

2. Quality Assurance:

a. Installer Qualifications: Use a qualified firm that is approved, authorized, or licensed by the roofing system manufacturer to install manufacturer's product and is eligible to receive manufacturer's warranty.

b. Manufacturer Qualifications: Use a qualified manufacturer that has UL listing and FMG approval for roofing systems specified for this project. All roofing components shall be from a single manufacturer.

c. Testing Agency Qualifications: Use an independent testing agency with the experience and capability to conduct the required testing, according to ASTM E548.

3. Warranty Requirements: Roofing manufacturer shall provide a minimum 20-year written warranty from date of final acceptance of project, and shall include all components of the roofing system by the manufacturer.

4. Products:

a. SBS-Modified Asphalt Sheet Materials: For roofing membrane sheets, use ASTM D6163, Grade S, Type I, glass-fiber-reinforced, SBS-modified asphalt sheet; smooth surfaced. For roofing membrane cap sheets, use ASTM D6163, Grade G, Type I, glass-fiber-reinforced, SBS-modified asphalt sheet; granular surfaced.

b. Base Flashing Sheet Materials: For backer sheet covering wood sheathing parapets use ASTM D4601, Type II, asphalt-impregnated and coated, glass fiber sheet, dusted with fine material surfacing on both sides.

For all other backer sheet applications, use ASTM D6163, Grade S, Type I, glass-fiber-reinforced, SBS-modified asphalt sheet; smooth surfaced.

Flashing sheet shall be ASTM D6221, Grade G, Type I, composite polyester and glass-fiber-reinforced, SBS-modified asphalt sheet; granular surfaced.

Liquid applied flashing shall be a liquid and fabric reinforced flashing system created with a stitch-bonded polyester scrim and a two-component, moisture cured, elastomeric, liquid applied flashing material, consisting of an asphalt extended urethane base material and an activator.

c. Auxiliary Roofing Membrane Materials: Use auxiliary materials as recommended by roofing system manufacturer for the intended use and compatible with the roofing membrane.

Use the roofing system manufacturer's asphalt-based, two-component, asbestos-free, hot or cold-applied adhesive specially formulated for compatibility with the membrane material to seal roof membranes.

Use the roofing system manufacturer's asphalt-based, two-component, asbestos-free, trowel-grade, hot or cold-applied adhesive specially formulated for compatibility with the flashing material to seal flashing.

Use mastic sealant as required by the roofing manufacturer.

Use ceramic-coated roofing granules provided by the roofing system manufacturer that match the specified cap sheet.

d. Walkway Pads: Provide mineral-granule-surfaced, reinforced modified asphalt composition, slip-resisting, foot traffic pads provided by the roofing manufacturer where shown on the plans or where required for maintenance access. Install in accordance with the roofing manufacturer's instructions. Pads shall be 32 inches x 32 inches.

e. Roof Insulation: Provide preformed roof insulation boards that comply with requirements and referenced standards, selected from manufacturer's standard sizes and of thicknesses indicated.

Use polyisocyanurate board insulation that conforms to ASTM C1289, Type II. Insulation package shall have an R-value greater than 18.5 and minimum thickness of 3 inches. Use multiple layers with no boards thicker than 1.5 inches.

Where tapered insulation is required, use ASTM C1289, factory-tapered insulation boards fabricated to a slope of 1/4 inch per 12 inches, unless otherwise specified.

To adhere insulation to the roof substrate, use the manufacture's no VOC, two-component cold fluid-applied adhesive formulated for the roof insulation.

For insulation cant strips, use ASTM C728, perlite insulation board.

f. Parapet Cap Flashing: Use stainless steel flashing that complies with ASTM A240, the NRCA Roofing Manual, and the SMACNA Architectural sheet metal manual unless otherwise specified on the plans. Provide complete with all clips and non-corrosive marine grade stainless steel fasteners. Fasteners shall be connected on the side of the flashing and not on the top surface. Parapet shall have joint covers at every corner.

g. Roof Drains: Size shall be as shown in the plans; use marine grade stainless steel dome with marine grade stainless steel mesh.

5. Execution: Verify that roof openings and penetrations are in place

and set and braced and that roof drains are securely clamped in place.

Verify that wood cants, blocking, curbs, and nailers are securely anchored to roof deck at penetrations and terminations, and that nailers match the thickness of the insulation.

Verify that the substrate deck is free of all oils and debris.

Modify any necessary equipment curbs to provide a minimum 8 inches base flashing height.

Install roofing system in strict accordance with the manufacturer's instructions.

6. Warranty Inspection: The completed roof system shall be inspected by a representative of the roofing manufacturer to verify that the installation meets all requirements of the warranty. The written warranty shall be signed and placed in the mechanical operation & maintenance manual.

823.07.7 Louvers: Install louvers in the sizes shown on the plans and in accordance with the manufacturer's recommendations. Louver frames and blades shall be hurricane-rated aluminum with zero water penetration. Louvers and louver components shall be designed to meet or exceed all IBC standards. All louvers shall have an AMCA Certified Ratings Seal.

1. Louver Material: ASTM B221, Alloy 6063-T5, T-52, or T6. Frames and blade thickness shall comply with IBC wind and missile impact loads. Blades shall have a minimum thickness of 0.080 inch.

2. Fasteners: Furnish aluminum fasteners to match finish and color listed below.

3. Louver Finish/Color: Provide louvers with an anodic finish, AAMA 611, AA-M12C22A42/A44, Class I, 0.018 mm or thicker. Submit a color chart to the Bridge Engineer for color selection with the manufacturer's full selection of colors at no additional cost.

4. Accessories: Furnish accessories complete with seals and stainless steel insect screens. All accessories shall be of similar material to the louvers and shall meet all IBC requirements.

5. Field Verification for Renovation Projects: Field verify all louver dimensions prior to submittal. Louver submittal shall have field dimensions clearly indicated.

823.07.8 Doors and Door Frames: Install steel doors and frames in the sizes shown on the plans and in accordance with this specification. Installation procedures and fabrication tolerances shall be as recommended by the SDI Standards 111A and 117 and by the manufacturer's recommendations. Hardware for steel doors shall be in accordance with 823.07.9. All galvanizing

shall be G90 or greater for both doors and frames.

1. Steel Doors: Steel doors shall be hollow metal, insulated, and of extra heavy-duty Grade III flush construction. Steel shall be stretcher level standard hot-dipped galvanized in accordance with ASTM A653 and A924. All panel seams shall be continuous welded. Steel door panels shall be 14 gage panels with 14 gage end closures. Steel doors shall be reinforced for application of hardware and closures. Reinforcing shall be 10 gage galvanized steel for hinges, 14 gage for closures, and 14 gage elsewhere. Prepare doors to receive mortise and concealed finish hardware, including cutouts, reinforcing, drilling, and tapping in accordance with the required hardware and templates provided by hardware suppliers. Drilling and/or tapping for surface-applied finish hardware may be done at the site.

Thoroughly clean all surfaces and chemically prepare for the acceptance of a factory-applied, baked on or air-dried, corrosion inhibiting primer coat of paint, and a factory applied electrostatic top coat. Submit a color chart with the manufacturer's full selection of colors to the Bridge Engineer for color selection. Make the full range of colors available at no additional cost to the Department.

Where glazing is required, apply non-removable stops on the outside and removable beads on the inside. Steel doors shall be 1-3/4 inches thick completely filled with suitable sound deadening and self-extinguishing insulating polyurethane core material. All exterior doors shall be foamed in place, vertically steel-stiffened core. All exterior doors are to be windstorm certified.

2. Steel Door Frames: Furnish steel door frames manufactured of 14 gage galvanized steel conforming to ASTM designations A653 and A924. Use unit type welded construction throughout with corners mitered, welded, and ground smooth on the outside. Weld removable steel spreaders to the bottom of the frame. Provide and install 14 gage galvanized steel anchors. Provide a minimum of 6 wall anchors and 2 floor anchors per frame. Provide two silencers on drill stops of strike jams. Finish as specified under "Steel Doors" above.

3. Aluminum Doors: Aluminum doors shall be heavy-duty, minimum 5-ply composite laminated construction. Exterior door ply shall be one-piece 0.040 inch smooth 5005-H14 stretcher-leveled aluminum alloy facing. Facings shall be commercially-bonded edge-to-edge to one-piece, oil-tempered hardboard backer. Doors shall be 1-3/4 inches thick. Core shall be an organic-based marine-grade honeycomb core with high compression strength of 94.8 psi (ASTM C365) and internal aluminum hardware backup

tube. The hardware backup tube shall be contiguous for the full perimeter of the door to allow for all specified and all non-specified hardware reinforcement. All fasteners shall be concealed and shall be non-magnetic stainless steel or aluminum. Door edges and face sheets shall be flush in appearance; face sheets shall be trimmed with replaceable extruded aluminum reglets of 6063-T5 alloy on perimeter edges. Lock stile shall have aluminum beveled-edge and integral wool-pile weather stripping.

a. Finish: Provide anodized, architectural class I finish, 0.018 millimeters minimum thickness meeting AAMA 611, AA-M12C22A44. Color shall match the storefront system (if applicable). Submit a color chart with the manufacturer's full selection of colors to the Bridge Engineer for color selection. Make the full range of colors available at no additional cost to the Department.

b. Wind Loading: Door shall be wind load tested and certified conforming to ASTM E330 at static air pressure difference 80 psf. Secure door to meet all IBC requirements. All exterior doors are to be windstorm certified.

4. Aluminum Frames: Construct aluminum heavy-duty frames from extruded aluminum 6063-T5 alloy with a minimum wall thickness of 0.125 inch. Cut corners square and fasten using concealed stainless steel screws. Snap in door stop to receive replaceable wool pile weather stripping. Screw-on door stops are not acceptable.

Finish shall be anodized, architectural class I, 0.018 millimeters minimum thickness meeting AAMA 611, AA-M12C22A44. Color shall match the storefront system (if applicable). Submit a color chart with the manufacturer's full selection of colors to the Bridge Engineer for color selection. Make the full range of colors available at no additional cost to the Department.

823.07.9 Door Hardware: Furnish hardware as necessary to complete all doors on facilities. The items of hardware described shall be considered as standard unless otherwise specified. All hardware used throughout the Work shall be equal in size, weight, material and workmanship. Items not specified, but necessary for the completion of the Work, shall match the quality and finish of the items that are described herein. Finish throughout shall be dull chrome US26D finish on brass or bronze or US32D finish on stainless steel, unless otherwise specified. All hardware shall match throughout the facility. Furnish a complete schedule of hardware indicating thereon all hands of doors, keying information, finishes, templates and any other pertinent data. Key all locksets and cylinders to fit all doors. Furnish 12 keys to the Project Engineer.

All items of hardware to be fastened to metal or pre-finished doors and/or frames shall be furnished to door template. Furnish templates and/or samples of approved hardware to the respective door and frame suppliers. Include a list of all necessary templates in the hardware schedule. Provide hardware materials and equipment as specified below:

1. Door Hinges: Hinges shall be stainless steel on all doors, and sized in accordance with the door manufacturer's recommendations. All doors shall have three hinges per leaf. Door hinges shall conform to BHMA A156.1.

2. Door Mutes: Provide door mutes for all metal door frames.

3. Door Stops: Provide door stops for all doors where levers or closures may strike walls or trim.

4. Surface Closers: Provide BHMA A156.4, Grade 1; rack-and-pinion hydraulic type surface closures with adjustable sweep and latch speeds controlled by key-operated valves and forged-steel main arm. Comply with manufacturer's written recommendations for size of door closers depending on size of door, exposure to weather, and anticipated frequency of use as shown on the plans. Provide factory-sized closers, adjustable to meet field conditions and requirements for opening force. Provide corrosion-resistant model with all aluminum body and non-ferrous covers.

5. Latch Sets/Lock Sets with Deadbolt: Latch sets shall be as scheduled on the plans and as described herein. Latch sets shall be certified under ANSI A156.13 Series 1000 for Grade 1. Mortise cylinder and escutcheons shall be by the same manufacturer as lock set. Lock and latch sets shall be stainless steel and have a US32D satin stainless steel finish.

6. Locks and Latches:

a. Strikes: Provide manufacturer's standard strike for each lock bolt or latch bolt complying with requirements indicated for applicable lock or latch and with strike box and curved lip extended to protect frame; finished to match lock or latch.

b. Flat-Lip Strikes: For locks with three-piece antifriction latch bolts, provide flat-lip strikes as recommended by manufacturer.

c. Mortise Locks: Furnish mortise locks complying with BHMA A156.13; Operational Grade 1; heavy gage wrought steel zinc dichromated cases; Series 1000.

Provide heavy-wrought stainless steel escutcheons.

Provide a cast stainless steel lever. Submit to the Bridge Engineer the manufacturer’s full range of lever trims for selection.

Trim finish shall comply with BHMA A156.18; 630 (US32D).

d. Thresholds, Weather Stripping, Door Bottoms, and Drip Caps:

Provide thresholds, weather stripping, door bottoms, and drip caps on all exterior doors. Thresholds shall be mill-finish aluminum and meet BHMA A156.21. Weather stripping shall be fabricated to full width of openings.

e. Flush Bolts: Provide flush bolts on the top and bottom of the inactive leafs of double doors; the bottom bolt shall have a dust proof cover.

f. Panic Bars: Panic bars shall be as scheduled on the plans and described herein. Panic bar shall be UL-listed for panic exit devices and meet BHMA A156.3, Grade 1. Lockset shall be standard operation with key-in-lever design. Push bar, lockset, and lever shall have a US32D satin stainless steel finish. Mortise cylinders and escutcheons shall be by same manufacturer as lock set and have a US32D satin stainless steel finish.

g. Astragals: Provide astragals on the exterior between the active and inactive leafs of double doors. The astragal shall meet BHMA A156.22.

h. Metal Drip Edge: Fabricate metal drip edge from stainless steel. Provide above exterior doorways.

i. Double Doors: Double doors shall include a latch set or lock set as described above for both the active and inactive leafs of the door.

823.07.10 Caulk and Sealant: Caulk all outside joints at the perimeter of all door and window openings. Caulk shall not be affected by long exposure to extremes of outside temperature; shall be free from volatile or drying oils; shall be mixed to the proper consistency at the factory; and shall be used as directed by the manufacturer. Caulking compounds for each application shall have the following properties:

1. Exterior Windows and Doors: Provide a one component, neutral curing, silicone grade sealant designed specifically for structural bonding applications of glazing. Sealant shall meet ASTM C920 type, grade NS, class 50, use NT. Sealant shall be as recommended by storefront manufacturer for wind loading.

2. Masonry Sealant: Provide a single component, moisture cure, non-sag, gun-grade elastomeric (polyurethane) sealant, designed for application in joints subject to structural movement. Sealant shall meet ASTM C920 for type S, grade NS, class 25. Color shall match exterior CMU block color.

823.08 FACILITY MECHANICAL SYSTEMS. See Section 821, Mechanical Systems.

823.09 FACILITY ELECTRICAL SYSTEMS. See Section 822, Electrical Systems.

823.10 MEASUREMENT. No measurement of materials will be made. Any estimate of the materials shown on the plans is approximate and no guarantee is made that it is the correct weight (mass), dimensions, or numbers of items to be furnished. It is the contractor's responsibility to determine the correct weight (mass), dimensions, or numbers of each item to be furnished. No adjustment in contract price will be made due to errors in the estimated weight (mass), dimensions, or numbers of items shown on the plans.

823.11 PAYMENT. Payment for the completed and accepted items will be made at the contract lump sum price, which includes furnishing, fabricating, erecting, cleaning and painting, galvanizing or other coating materials; furnishing all required labor, shop fabrication, equipment, tools, staging, falsework, forms, welding, bolts, and other hardware; and the performance of all work necessary to complete the item.

When changes in the work are ordered by the engineer, which vary from the contract, compensation will be in accordance with 109.04.

Payment will be made under:

Item No.	Pay Item	Pay Unit
823-01	Bridge Operator’s House	Lump Sum
823-02	Bridge Operator’s House - Repair/Rehabilitation	Lump Sum
823-03	Bridge Machinery House	Lump Sum
823-04	Bridge Machinery House - Repair/Rehabilitation	Lump Sum
823-05	Architectural Facilities	Lump Sum
823-06	Architectural Facilities - Repair/Rehabilitation	Lump Sum

Section 824 (Reserved)

Section 825 (Reserved)

Section 826 (Reserved)

Section 827 (Reserved)

Section 828 (Reserved)

Section 829
Instrumentation and Evaluation

829.01 DESCRIPTION. Furnish and install instrumentation, provide power and backup power systems, access for installation and removal of instrumentation, and loadings for structural evaluation as specified. Also, provide instrumentation consultant engineering services when specified.

829.02 MATERIALS. Comply with the following sections and subsections.

Electrical Systems	822
Metals	1013
Carbon Steel Bolts, Nuts, and Washers	1013.08
High Strength Bolts, Nuts, Washers, and Direct Tension Indicators (DTIs)	1013.08

Provide mechanically galvanized bolts, nuts, washers, and DTIs in accordance with Section 811.

Provide stainless steel machine screws and washers for fastening.

Instrumentation shall be as shown on the plans or when specified, as designed by the contractor's consultant.

829.03 CONSTRUCTION REQUIREMENTS.

829.03.1 Submittals: When the Bridge Instrumentation and Evaluation Plan is not provided, submit to the Bridge Engineer for review a "Bridge Instrumentation and Evaluation Plan" in a+ccordance with 801.05. Submit the plan no later than 30 calendar days prior to commencing the work. The engineer will evaluate the plan for conformance with the plans and specifications. Allow 21 calendar days for review. Resubmit any parts of the submittal returned for correction and allow an additional 14 calendar days for review of each resubmittal.

No changes in the Bridge Instrumentation and Evaluation Plan shall be made after final acceptance without the concurrence of the engineer.

Provide at least the following information in the Bridge Instrumentation and Evaluation Plan:

- Name and address of supplier and manufacturer of component and associate information and cut sheet.

- Detailed drawings of placement of all sensors, method and sequence of sensor placement, and layout of wiring, conduit, and data collection system.
- Details of the access system for attaching and removing instrumentation and associated equipment.
- Schematic of data acquisition system. Plans for sampling frequency, data retrieval, and software to be used. Software setup including configuration of ports and flags, and IP addresses.
- Instrumentation enclosure and breakaway mounting pole meeting NEMA 4X requirements.
- Estimation of power consumption. Planned power and backup power system for a minimum of 7 days uptime.
- Detailed plan for all test loading.
- Traffic control for each operation associated with instrumentation and evaluation.
- Other information shown in the plans or required by the engineer.

829.03.2 Instrumentation: Furnish instrumentation as shown on the plans. Upon completion of instrumentation work, all instrumentation, power supply, data collection systems, data loggers, conduit and wiring, and data transmitters will become the property of the Department.

Weather proof instrumentation with a rating of IP66 or higher for above water applications and a rating of IP68 for submerged applications. Shelter wiring and data collection systems from the weather.

829.03.3 Instrumentation Assistance: Provide access and assistance as required for installation and removal of instrumentation, and access for data collection during the project.

829.03.4 Evaluation: Furnish test loading equipment, equipment operation, and traffic control as required by the plans.

829.03.5 Instrumentation Services: When specified, provide consultant services to design the Instrumentation and Evaluation Plan, install instrumentation in accordance with the plans, monitor instrumentation, and upon completion of the instrumentation and evaluation work, remove instrumentation not required for future use.

829.04 INSTRUMENTATION REMOVAL. Remove all sensors, data acquisition systems along with all associated conduits, and instrumentation enclosure when shown on the plans. Deliver sensors and data acquisition systems to the engineer after removal. Any unsalvageable materials shall

become the property of the contractor. Dispose of beyond the limits of the project in accordance with Section 202.

829.05 MEASUREMENT.

829.05.1 Instrumentation: Instrumentation will be measured per lump sum, which includes all materials, equipment, tools, and incidentals necessary to complete this item. Type and quantity of instrumentation will be shown on the plans or as specified in the Instrumentation and Evaluation Plan.

829.05.2 Instrumentation Assistance: Provide instrumentation assistance for instrumentation items shown on the plans. Instrumentation Assistance will be measured per lump sum. Measurement includes all equipment, material, labor, and time necessary to complete this item.

Instrumentation Assistance occurrences that are necessary because of contractor error will not be measured for payment.

829.05.3 Evaluation: Evaluation is measured per lump sum, which includes all materials, equipment, tools, and incidentals necessary to complete this item. The type and description of the evaluation will be shown on the plans.

829.05.4 Instrumentation Services: Instrumentation services will be measured per lump sum. Measurement will include consultant services to development the Instrumentation and Evaluation Plan, install the instruments, monitoring service, data collection, data analysis, reporting, and removal of instrumentation upon completion of the work.

829.06 PAYMENT.

Payment will be made under:

Item No.	Pay Item	Pay Unit
829-01	Instrumentation	Lump Sum
829-02	Instrumentation Assistance	Lump Sum
829-03	Evaluation	Lump Sum
829-04	Instrumentation Services	Lump Sum

Section 830
Repair and Rehabilitation

830.01 DESCRIPTION. Perform structural repairs and rehabilitation as specified.

830.02 MATERIALS. Materials shall be specific to the required actions of the contract. Comply with the following sections and subsections:

Structural Concrete	805.02
Reinforcing Steel	806.02
Structural Metals	807.02
Steel Grid Flooring	808.02
Bridge Railings, Hand Railings and Permanent Roadway Barriers	810.02
Painting and Protective Coatings	811.03
Treated Timber	812.02
Concrete Approach Slabs	813.02
Bearings	814.02
Joints	815.02
Drainage Systems	816.02
Movable Bridges	820.04
Mechanical Systems	821.04
Electrical Systems	82204
Facilities	82304
Portland Cement Concrete	901.02
Epoxy Resin Adhesives	1017

830.02.1 Structural Concrete Patching: Conform to Table 830-1 for structural concrete patching unless otherwise specified. An exception is made for the specific case of patching tops of decks, where rapid setting patching materials for concrete from the Approved Materials List may be used.

Table 830-1
Structural Concrete Patching Material Requirements

Parameter	Test	Value
Minimum Compressive Strength	ASTM C39 or ASTM C109	2000 psi (min.) at 24 hrs 4000 psi (min.) at 7 days
Curing Shrinkage	ASTM C157	0.07% max. at 28 days
Curing Expansion	ASTM C157	0.03% max. at 1 day
Thermal Expansion	ASTM C531	5.0×10^{-6} in/in/°F (min.) at 28 days 9.0×10^{-6} in/in/°F (max.) at 28 days
Bond Strength by Slant Shear	ASTM C882	2000 psi (min.) at 3 days

830.03 SUBMITTALS. Conform to Section 801. Review times will be in accordance with 801.05.1.2.3.

830.03.1 Structural Concrete Patching: As a minimum, submit the following information for review:

Name and type of the proposed repair mortar material and associated Portland cement concrete;

Name and address of supplier and manufacturer of the repair mortar and associated bonding agent;

Product data sheets showing compliance in accordance with the latest approved materials sampling manual specifications. The engineer may require documentation from an approved independent testing authority to confirm the performance criteria stated on product data sheets;

Detailed proposal of concrete removal, application, and curing techniques to be used;

For site mixed cementitous mortar, the following additional information is required:

1. Name, type, and manufacturer of the proposed cement;
2. Name, type, and supplier of the proposed aggregates;
3. Test sample for DOTD testing labs; and

Details for repairs of damaged deformed reinforcing steel. These details shall conform to Section 806.

830.03.2 Span Movement: Prior to beginning work, submit to the Bridge Engineer for review a span movement plan designed, sealed, signed and dated by a Professional Engineer registered in the State of Louisiana which addresses all structural, environmental and traffic management goals and commitments of the contract.

830.03.3 Structure Jacking: Prior to beginning work, submit to the Bridge Engineer for review a structure jacking plan designed, sealed, signed and dated by a Professional Engineer registered in the State of Louisiana. Provide as a minimum the following information:

- Design of the structure jacking system;
- Equipment;
- Loads and capacities;
- Sequence of operations;
- Shoring; and
- Traffic management goals and commitments.

830.03.4 Bolt-Rivet Replacement (Structural Steel): Submit to the engineer for review a fastener removal plan demonstrating that the proposed sequence and method of removal is a safe method and will not damage or adversely affect the structural members involved.

830.04 CONSTRUCTION REQUIREMENTS. Construction requirements will be specific to the structural repair and rehabilitation work specified.

830.04.1 Structural Concrete Patching: Repair designated areas shown on the plans. Remove loose or defective concrete. Saw cut and/or chip a perpendicular or back-tapered face along the periphery of the repair area so that the minimum depth of repair is approximately 1/2-inch to prevent feathered edges. Sandblast and remove all loose particles, dirt, deteriorated concrete or other substances from the repair area that could impair the bond between the existing concrete and reinforcing steel to remain and repair material. Maintain all reinforcing steel at its original position and clean exposed steel to meet SSPC-SP3 or SSPC-SP6 prior to placement of repair material. Replace damaged or corroded reinforcing steel with bars and splices of equal or greater capacity and as directed. Add reinforcing steel as specified in the plans.

Apply a bonding agent to the entire repair area including the reinforcing steel prior to placement of the patch material, and mix, apply and cure materials all in accordance with the manufacturer's recommendations.

Remove forms as directed by the engineer. Do not allow mortar or concrete to freeze during placement or curing. Sound completed repairs to locate any defective areas. Remove and repair defective areas at no additional cost or time to the Department. Finish patched areas in accordance with the plans and 805.08.

Temporary shoring is required for structure members that have insufficient load carrying capacity during the patching process. Orientation of repair area may affect material and construction requirements.

Maintain materials in original sealed containers until the time of use and store in accordance with the manufacturer's recommendations.

Materials shall be accompanied by a certificate of manufacture. Materials stored beyond the manufacturer's recommended shelf life shall not be used and will be rejected.

830.04.2 Span Movement: Span movement may involve transportation of a span to or from a staging area, jacking and sliding a span from one location to another, lifting a span from one location to another, etc. as specified.

Provide all equipment, temporary works, staging areas for span construction, jacking, lifting, movement of a superstructure span or unit using mechanized methods, placement of the span or unit, and the restoration of the staging areas to their original condition. All work shall be in accordance with the contract.

830.04.3 Structure Jacking: Structure jacking is the raising and lowering of structures as specified.

Jack the structure in accordance with the Contract and as directed by the engineer. Do not damage the structure. Temporary bracing and shoring may be required to prevent damage to the structure and to temporarily support structure loads. If used, bracing and shoring shall be designed, sealed, signed and dated by a Professional Engineer, registered in the State of Louisiana.

Damage is defined as any change in the structure which permanently decreases the capacity and/or reduces the life span of the structure or any of its components. Whether or not jacking has caused damage will be determined by the engineer and repairs shall be made to the satisfaction of the engineer at no additional cost or time to the Department.

830.04.4 Epoxy Injection: Repair cracks in concrete using an epoxy injection system in accordance with the contract, the manufacturer's recommendations, and as directed by the engineer.

830.04.5 Bolt-Rivet Replacement (Structural Steel): Remove existing fasteners identified in the Contract and replace with new high strength fastener assemblies conforming to Section 807. Do not damage any structural steel to remain during fastener removal. Unless specified otherwise, remove fasteners by mechanical means only. Removal by torching is not allowed. Unless specified otherwise, all removed fasteners and any coating material

will become the property of the contractor and disposed of in accordance with Section 202. Comply with Section 811 for removal of the existing coatings.

Any damaged structural steel resulting from fastener removal shall be repaired or replaced to the satisfaction of the engineer at no cost or time to the Department.

Unless specified otherwise, all fastener holes shall be reamed up to a circular hole having a diameter 1/16-inch larger than the nominal size of the replacement fastener. Clean and grind fastener assembly contact areas flat and smooth prior to painting and fastener assembly installation.

The area of fastener replacement and new fastener assembly shall be protected with a coating system. If the plans do not provide paint or coating system requirements or pay items, the area of fastener replacement and new fastener assembly shall be coated in accordance with Section 811 with a paint system compatible with the existing coating to remain. Apply a minimum of one prime coat of the specified paint system to fastener assembly contact areas.

Testing, installation and inspection of bolts, nuts, washers and DTI devices shall be in accordance with the contract and Section 807.

830.05 MEASUREMENT.

830.05.1 Bridge Superstructure / Substructure Repair: Bridge Superstructure/Substructure Repair will be measured for payment per each contiguous repair as defined in the Contract.

830.05.2 Tunnel Repair: Tunnel Repair will be measured for payment per each contiguous repair, per square foot of repair area, or per lump sum as defined in the contract.

830.05.3 Girder Strengthening: Girder strengthening will be measured per each girder strengthened.

830.05.4 Span Movement: Span movement will be measured per each move specified in the plans.

830.05.5 Structure Jacking: Structure jacking will be measured on a lump sum basis.

830.05.6 Epoxy Injection: Epoxy injection will be measured per linear foot repaired.

830.05.7 Bolt – Rivet Replacement: This item, completed and accepted, will be measured for payment per each fastener replacement, and will include all materials, coatings, testing, labor, equipment, fastener removal plan, tools, and the performance of all work necessary to remove and dispose

of the existing coatings and fasteners, and furnish, install, inspect and test high strength bolts, nuts, washers and DTI devices.

830.05.8 Structural Concrete Patching: Structural Concrete Patching will be measured by the square foot of patched material placed. When a repair involves multiple surfaces, such as a corner, measurement will be made on all surfaces repaired.

Measurement will include concrete removal, repair and replacement of reinforcing steel, placement of specified additional reinforcing steel, surface preparation, placement of repair materials, and all work required to complete the item in accordance with the contract. When the contract requires concrete removal by hydro-blasting or milling, the concrete removal will be measured and paid for under a separate removal item.

830.06 PAYMENT. Payment will be made at the contract unit price and will include all labor, equipment, materials, and incidentals required to complete the work.

Payment will be made under:

Item No.	Pay Item	Pay Unit
830-01	Bridge Superstructure Repair	Each
830-02	Bridge Substructure Repair	Each
830-03	Tunnel Repair	Each
830-04	Tunnel Repair	Square Foot
830-05	Tunnel Repair	Lump Sum
830-06	Girder Strengthening (Type)	Each
830-07	Structural Concrete Patching	Square Foot
830-08	Span Movement	Each
830-09	Structure Jacking	Lump Sum
830-10	Epoxy Injection	Linear Foot
830-11	Bolt-Rivet Replacement (Structural Steel)	Each

PART IX—PORTLAND CEMENT CONCRETE

Section No. **Page No.**

901 Portland Cement Concrete.....911

Section 901
Portland Cement Concrete

901.01 GENERAL. This section specifies requirements for portland cement (PC) concrete, including methods and equipment for handling and storing materials, mixing, transporting, and placing concrete.

Fresh concrete is being in a plastic state that has not achieved initial set.

Structural concrete is designated by "Class" and pavement concrete by "Type."

Portland cement concrete shall conform to the requirements of Table 901-3, "Master Proportion Table for Portland Cement Concrete." Fly ash or ground granulated blast-furnace slag (GGBFS) is permitted as a partial replacement for PC in accordance with 901.08.2. All structural class concrete, except minor structure class concrete, requires permeability testing by surface resistivity in accordance with DOTD TR 233.

Provide portland cement concrete from a Department approved mix design, produced from a Department certified plant, and transported in Department certified trucks.

Provide sufficient plant capacity and transporting equipment to ensure delivery at required rates.

Methods of delivery and handling concrete shall facilitate placing with minimum rehandling.

Provide adequately equipped facilities or means for all quality control testing.

Quality assurance requirements shall be as specified in the latest edition of the Department's publications entitled Application of Quality Assurance Specifications for Portland Cement Concrete Pavement and Structures or Application of Quality Assurance Specifications for Precast-Prestressed Concrete Plants.

901.02 MATERIALS. Provide materials conforming to the following subsections:

Portland Cement	1001.01
Blended Hydraulic Cement	1001.02
Masonry Cement and Mortar Cement	1001.03
Portland Blast-Furnace Slag Cement	1001.02
Aggregates	1003.01 & 1003.08
Admixtures	1011.02

Water	1018.01
Fly Ash	1001.04
Ground Granulated Blast-Furnace Slag	1001.05
Microsilica (Silica Fume)	1001.06

Use cement, fly ash, ground granulated blast-furnace slag, and microsilica (silica fume) certified by the manufacturer in accordance with current Department procedures.

Maintain accurate records of cement, fly ash, ground granulated blast-furnace slag, and silica fume deliveries and their use. Furnish copies of these records to the engineer in such form as required.

901.03 TRANSPORTATION AND STORAGE OF CEMENTITIOUS MATERIALS. Transport cementitious materials in watertight conveyances and store in separate dry facilities. Reject material that is contaminated, partially set, or contains lumps of caked material.

Do not mix brands, mills, types, grades, or classes unless authorized by the DOTD Materials Engineer Administrator. The engineer may waive this requirement in case of plant breakdown during production to allow concrete, conforming to the requirements of this Section 901, furnished from another plant to finish a placement in progress.

901.04 HANDLING AND STORAGE OF AGGREGATES. Stockpile aggregates so that no detrimental degradation, contamination or segregation of aggregates results. Do not incorporate any foreign material into the aggregates. Provide a positive separation between natural ground and stockpile. Do not intermingle individual stockpiled materials. Do not add material to working faces of the stockpiles during continuous operations. Maintain drainage of stockpiles to control moisture content. Control aggregates to maintain the required gradation. Do not use aggregates that have become segregated or contaminated.

901.05 SAMPLING AND TESTING. Perform sampling and testing in accordance with the Department's “Materials Sampling Manual and Testing Procedures Manual”. Furnish necessary materials for testing at no direct pay.

For pumped concrete, sample at the discharge end of pump.

901.06 QUALITY CONTROL OF CONCRETE. The contractor is responsible for quality control of materials during handling, proportioning, mixing, and placing operations, which includes the following:

1. Initial determination and necessary subsequent adjustments in proportioning of materials used to produce the specified concrete;

2. Providing suitable equipment for determination of aggregate gradation, moisture, air content, slump, unit weight, and temperature;

3. Trial mixes as necessary;

4. Testing and analysis of the mix for quality control purposes;

5. The setting of dials, gauges, scales or meters, adjusting batch weights; and accurate batching.

Furnish a Certified Concrete Technician at the plant or job site to make adjustments in batch weights for moisture content, to perform necessary adjustments in proportioning materials, and to perform tests necessary for control of the concrete mix within specification requirements. Do not begin daily plant operations until the Certified Concrete Technician has determined that gradations and batch weight adjustments are within specification limits. The Certified Concrete Technician or the Authorized Concrete Field Tester shall perform the job-site control tests for slump, air content, mix temperature, and then report the documented results to the contractor. The use of an Authorized Concrete Field Tester will not relieve the Certified Concrete Technician from performing the remaining duties as outlined in these specifications.

The contractor's Certified Concrete Technician and Authorized Concrete Field Tester shall be certified or authorized upon satisfactory completion of the Department's requirements. Personnel with a current ACI Concrete Field Testing Technician Grade I certification qualify as an Authorized Concrete Field Tester.

901.06.1 Mix Design: The Certified Concrete Technician shall submit a proposed concrete mix design on the form provided by the Department showing details for concrete to be furnished. Do not start work until the concrete mix design has been accepted and signed by the District Laboratory Engineer. Review and acceptance of this mix design does not release the contractor from the responsibility of producing concrete that meets the minimum requirements of the specifications.

Proportion the volume of coarse aggregates in concrete mixes in accordance with Table 901-1 below. This does not apply to mixes for concrete pipe, Types B and D pavement, and minor structure class concrete. Fine aggregate must have fineness Moduli (FM) between 2.20 and 3.00. For an example of proportioning of coarse aggregate, see the Department's publication entitled Application of Quality Assurance Specifications for Portland Cement Concrete Pavement and Structures.

Table 901-1
Volume of Coarse Aggregate per Unit of Volume of Concrete

Nominal Maximum Size of Aggregate, Inches	Volume of Dry-Rodded Coarse Aggregate per Unit Volume of Concrete for Different Fineness Moduli of Fine Aggregate[1]				
	2.20	2.40	2.60	2.80	3.00
3/8	0.52	0.50	0.48	0.46	0.44
1/2	0.61	0.59	0.57	0.55	0.53
3/4	0.68	0.66	0.64	0.62	0.60
1	0.73	0.71	0.69	0.67	0.65
1 1/2	0.77	0.75	0.73	0.71	0.69
2	0.80	0.78	0.76	0.74	0.72
3	0.84	0.82	0.80	0.78	0.76

[1]Volumes are based on aggregates in dry-rodded condition as described in AASHTO T19, Unit Weight of Aggregate. These volumes are selected from empirical relationships to produce concrete with a degree of workability suitable for usual reinforced concrete construction. For less workable concrete such as required for concrete pavement construction, these volumes may be increased up to 10 percent. For more workable concrete, as may be required for pumping, these volumes may be reduced up to 10 percent.

Proportion aggregates for pavement Types B and D mixes in accordance with 1003. 08.3.

Perform trial mixes to demonstrate the mix's performance and the compatibility of components.

Submit test results for slump, unit weight, air content, set times, and surface resistivity (i.e., permeability) when required. Develop a curve for compressive strength (flexural strength for pavements if required) at 3, 7, 14, and 28 days. All trial mixes, especially those incorporating ASTM C494 Type S admixtures, shall demonstrate their intended specific use and compliance with this section to the District Lab Engineer. Submit these findings to the DOTD Fabrication Engineer for all precast and prestress elements.

Furnish materials to the Department for verification of trial mixes as requested.

The District Laboratory Engineer may waive trial mixes, in writing, for previously accepted mix designs. Waiver of trial mixes does not release the contractor from the responsibility of producing concrete that meets the minimum requirements of the specifications.

Ensure that slumps are within the ranges shown in Table 901-3 when tested in accordance with DOTD TR 207. The Chief Construction Engineer may authorize an increase in maximum slump, without mix segregation, by use of water reducing admixtures. Formulate mixes to produce concrete that,

when molded and cured in accordance with DOTD TR 226 and tested in accordance with DOTD TR 230, show an average compressive strength not less than shown in Table 901-3.

901.06.2 Quality Control Tests: Conduct tests to confirm the mix complies with the accepted mix design. Determine gradation and moisture content of aggregates used in the concrete mixture. Test the mixture at the job site for slump, unit weight, temperature, and air content. Keep mix variations within specified control limits for individual samples. Plot test results for gradation, slump, unit weight, and air content on control charts for individual samples. Submit these control charts to the engineer.

Monitor the mix components (cementitious materials, chemical admixtures, chemical additives, and aggregates) for variations. As cementitious materials and chemical admixture shipments arrive, verify slump, air content, and initial set time by testing at ambient temperatures. Adjust the mix design to rectify any changes, which would adversely affect constructability, concrete placement, or compliance with the specifications. Document the testing to validate component consistency on the control charts. Note conformance or variation in mix parameters (workability, set times, air content, etc.) on the control charts. Provide a copy of the proposed testing plan to the engineer for record. Acceptance of the plan does not relieve the contractor of the responsibility for satisfying specifications.

Select times to obtain control test samples using random number tables in accordance with DOTD S 605 or by random selection. Conform to gradation control limits of aggregates as shown in 1003.08.

Use the Materials Sampling Manual to determine the minimum number of quality control tests for structural and pavement concrete. Take additional test samples as directed for slump, concrete temperature, and air content.

For minor structure concrete only, a Certified Concrete Technician or Authorized Concrete Field Tester will not be required, but implement a quality control testing program to ensure that the concrete meets the requirements of these specifications.

When producing concrete for Types B and D pavements, determine gradations daily on each stockpile of aggregates. Base all gradation calculations on percent of dry weight. Upon determination of the gradation of each stockpile, mathematically determine the percent of the total aggregates retained based on the proportions of the combined aggregate blend, and check for conformance with Table 1003-19.

For additional QC requirements for Mass Concrete, see 901.12.

901.06.3 Mix Adjustments: It is permissible to adjust the ratio of fine to coarse aggregates of the approved mix design by no more than 5 percent.

Never adjust to materially affect the volume of concrete. For mixtures incorporating the Type B or D gradation, if the proportions of the aggregate sizes used do not satisfy the gradation requirements of 1003.08.3 due to changes in the gradation, adjust the proportions to bring the combined aggregates back within specification limits. These minor adjustments for gradation will not require a new mix design. Ensure that the mix produced is uniform, workable and within the specification limits of Table 901-3. When plant operations do not produce a uniform and workable mix, cease plant operations and take corrective action prior to restart.

When slump, air content, concrete temperature, or gradation measurements, as plotted on control charts, indicate that the mix is not uniform and may fall outside tolerance limits, immediately make adjustments to keep the mix within specified limits. Failure to make proper adjustments or the mix deviates from specification requirements, or the mix is obviously defective, the Department will reject the mix.

Do not change sources of any materials or percentages of cementitious materials, until a new Mix Design form showing the new material or adjusted proportions hasbeen accepted.

901.6.4 Acceptance and Verification for PCCP Types B and D Concrete: Use the Materials Sampling Manual to determine sampling and testing requirements for acceptance and verification for concrete for Types B and D pavements, except as follows:

1. Gradation testing of individual stockpiles for acceptance will not be required.

2. Verification tests, performed by the District Laboratory to assure conformance to the combined aggregate gradation shown in Table 1003-19, are at the frequency of one sample every five days of production.

3. Upon determination of the gradation of each aggregate size sampled, mathematically determine the percent retained based on the dry weight of the total combined aggregates based on the proportions of the combined aggregate blend, and check for conformance with Table 1003-19.

4. If the results of the verification sample indicate that, the combination of aggregates does not meet the requirements of 1003.08.3, re-sample the aggregates, and test again. If the results of the second verification sample indicate that the combination of aggregates does not meet the requirements of 1003.08.3, adjust operations to produce a mix meeting these specifications. The Department will investigate and compare verification results to quality control results, for the same period, to determine appropriate action.

901.07 SUBSTITUTIONS. In accordance with Table 901-2, these are the allowable mixture substitutions.

Table 901-2
Portland Cement Concrete Mixture Substitutions

Structural Class[1]	Substitute
A1	No Substitutions
A2	No Substitutions
A3	No Substitutions
P1	P2, P3
P2	P3,
P3	No Substitutions
S	No Substitutions
MASS(A1)	No Substitutions
MASS(A2)	No Substitutions
MASS(A3)	No Substitutions
Minor Structure Class[1]	
M	A1, B, D
R	A1, B, D
Pavement Type[1, 2]	
B	D
D	B
E	No Substitutions

[1]The substituting mixture shall meet the requirements of Table 901-3 for its class or type. The substituting mix shall meet the strength requirements of the original mix. .
[2]If approved by the engineer, small irregular areas of paving projects using Types B or D concrete may be substituted with Class A1 concrete.

901.08 COMPOSITION OF CONCRETE. Type of cement and composition of concrete shall be in accordance with the requirements of this Section 901 and Table 901-3. For mix designs not conforming to Section 901 or Table 901-3, the approval of the Chief Construction Engineer is required.

901.08.1 Cement: Allowable types of cement are as follows:

Use	Allowable Cement Types
General Construction (Structural Class Concrete and Minor Structure Class Concrete)	Type I and/or II portland cement; Blended Hydraulic Cement Type IL portland lime cement
Concrete Pavement	Type I and/or II portland cement; Blended Hydraulic Cement Type IL portland lime cement Type III portland cement for high early strength (HES) applications only
Prestressed or Precast Concrete	Type I and/or II, or III portland cement; Blended Hydraulic Cement Type IL portland lime cement

901.08.2 Cementitious Material Substitution: For structural classes of concrete, fly ash conforming to 1001.04 and GGBFS conforming to 1001.05 may be partially substituted for portland cement on a pound for pound basis. For purposes of cement material substitution with fly ash and slag, do not treat Type IL cement as blended.

A binary concrete mix is one that combines portland cement and one additional cementitious replacement, e.g., GGBFS or fly ash (class C or F).

A ternary concrete mix is one that combines portland cement with two additional cementitious replacements, e.g., GGBFS and fly ash (class C or F) or fly ash (both class C and F).

The maximum substitution rate for binary mixtures is 30 percent fly ash or 50 percent GGBFS.

The maximum substitution rate for ternary mixtures containing Type I, II, III, or 1L portland cement is 70 percent of cement. When using Type IP or IS portland cement, the maximum substitution rate for ternary mixtures is 40 percent. Ternary combinations using both class C and F fly ash are allowable. When using fly ash ternary mixtures, replace portland cement with class C and class F fly ash in equal amounts. When using combinations of GGBFS and fly ash, the amount of GGBFS must be equal to or greater than the amount of fly ash.

For pavement types of concrete (Types B and D), the maximum substitution rate for ternary mixtures is limited to 50 percent of cement and for binary mixtures is 30 percent fly ash or 50 percent GGBFS.

The use of Type III portland cement outside of the specified allowances for precast, prestress, and specified HES pavements requires the approval of the Chief Construction Engineer.

901.8.3 Chemical Admixtures: Only use admixtures complying with 1011.02, or listed on the Approved Materials List.

Use an air-entraining admixture in all concrete. Test the total air content of the concrete in accordance with DOTD TR 202, and meet the requirements specified in Table 901-3.

Use set-retarding admixtures in an amount sufficient to produce the necessary retardation. Consider the influence of different materials and job conditions, including local weather on setting characteristics.

Include the amount of water incorporated in admixtures as a part of required mixing water.

Follow manufacturer's recommendations for adding and mixing high range water reducers (HRWR, superplasticizer) to the mix.

When using multiple admixtures, ensure the same company manufactures all the admixtures, and they are all compatible.

901.8.4 Water: Ensure that the total amount of water in the mixture, including admixtures and free water, does not exceed the maximum water-cementitious ratio specified in Table 901-3. Free water includes all water entering the mix with the aggregates, except water absorbed by the aggregate.

901.8.5 Aggregates: Ensure that all aggregates for use in portland cement concrete meet the requirements of 1003.01.

901.8.5.1 Fine Aggregates: Ensure that fine aggregates, except for combined gradations for Types B and D, comply with the requirements of 1003.08.1.

901.8.5.2 Coarse Aggregates: Ensure that coarse aggregates, except for combined gradations for Types B and D, are the grade specified in Table 901-3 and comply with the requirements of 1003.08.2. In concrete for bridge decks, use coarse aggregates with a friction rating of I, II, or III in accordance with 1003.01.2.4.

901.8.5.3 Aggregates for Types B and D Gradations: Ensure that combined aggregate gradations comply with the requirements of 1003.08.3.

901.09 EQUIPMENT. Provide sufficient plant capacity and transporting equipment to ensure delivery at the required rate. Ensure that the rate of delivery provides for proper handling, placing and finishing of concrete and maintains a workable surface. Ensure that methods of delivering and

handling concrete facilitate placing with a minimum of rehandling and without damage to the structure or concrete.

901.9.1 Plant Equipment: Ensure that batch plants include approved storage, weigh hoppers, and measuring devices. Properly seal and vent equipment to minimize contamination, dusting and loss of material. Ensure uniform distribution of the incorporated materials.

Provide adequate water supply and a device for automatically controlling the amount of water used in each batch.

Provide communication between the concrete batcher and loader operator.

901.9.1.1 Direct-Fill Elevating Weigh Hoppers: For plants using direct-fill elevating weigh hoppers, use computer controlled lights as an indicator of aggregate weights, but not as the sole means of control for aggregate proportioning. Provide means of control so that, as approaching the quantity desired in the weigh hopper, material may be added slowly and shut off with precision. Ensure that weigh hoppers eliminate accumulation of materials and discharges completely. Make provisions for removal of overloads.

901.9.1.2 Storage Bins and Silos: For plants with storage bins, ensure that the bins have adequate separate compartments for each size of aggregate. Design each compartment to discharge efficiently and freely. Provide a means of control so that, as approaching the quantity desired in the weigh hopper, material may be added slowly and shut off with precision.

Ensure that silos are weatherproof, sealed, free of holes, and prevent contamination. Ensure complete separation for each cementitious material. Design silos to freely discharge and equip with vibrators and/or aerators to maintain flow of material and prevent accumulation. Provide silos with a positive means of shut off without leaking into the weigh hopper.

901.9.1.3 Measuring Devices: Equip batch plants to proportion materials by approved weighing/metering devices. Moisture probes are allowed to determine the moisture content of aggregates for batch adjustment, provided the accuracy is within 0.5 percent of the results obtained by the Certified Concrete Technician in accordance with DOTD TR 106 and confirmed by the engineer.

Use separate scale systems: one for aggregates, and another for cementitious materials. Weigh each size of aggregate from separate bins either individually or cumulatively. Weighing each cementitious material cumulatively in the same hopper is allowable but measure the weight of the cement first before other cementitious materials.

Ensure that weigh hoppers eliminate accumulation of materials and discharge completely. Make provisions for removal of overloads.

Ensure that scales are accurate to 0.5 percent throughout the range of use. Maximum graduation on scales shall be 0.1 percent of the rated scale capacity. When beam type scales are used, ensure that poises are lockable into any position to prevent accidental change of position, and the weigh beam and a telltale device is in view of the operator. Plant measuring devices shall be subject to approval by the Department. They shall be tested, inspected, and certified every 90-calendar days by a qualified independent scale service or the Weights and Measures Division of the Louisiana Department of Agriculture and Forestry at no direct cost to the Department and more frequently when the engineer deems it necessary to assure their accuracy. A qualified independent scale service or the Weights and Measures Division of the Louisiana Department of Agriculture and Forestry shall certify the plant's laboratory-measuring devices annually at no direct cost to the Department.

Batch individual aggregates within 2 percent, and the cumulative total weight of aggregates within 1 percent of the required weight.

Ensure that cementitious materials are within 1 percent of the required weight. For smaller batches of 1 to 3 cubic yards, the quantity of cement and cumulative quantity of cementitious materials shall be neither less than the required amount nor more than 4 percent in excess. Cement in standard bags need not be weighed; however, furnish in full bag increments and adjust the quantities of other materials accordingly. Do not use bagged fly ash or GGBFS.

Measure the mixing water by volume or weight. Ensure that water measuring devices are accurate to 1 percent at 1/2 the maximum allowable water per batch and the maximum graduation is 1 gallon.

Use approved methods and equipment for adding admixtures into the batch. Measure the quantity of admixtures with an accuracy of 3 percent. Provide a separate dispensing device for each admixture.

901.09.1.4 Batch Tickets: Certified concrete plants may be equipped with an approved automatic ticket printer system for recording required batching information. Enter actual weights of material batched each time on the Batch Certification Report or an approved electronic document. When an automatic ticket printer system is not used, determine quantities and batching information by visual observation. The contractor's authorized representative shall record these quantities on the Batch Certification Report.

Ensure that the approved ticket printer system is tamper-proof and prints time of batching, amount of water, batch weights, moisture content of

aggregates, and quantities of admixtures. The Certified Concrete Technician may add moisture content of aggregates or quantities of admixtures to the printed ticket when the automatic system does not have these capabilities. During a printer breakdown, determine quantities by visual observation and certify as stated above.

Ensure that all records of batches show batch number, day, month, year, and time of day to the nearest minute for each batch. Record any added water on the Batch Certification Report Provide to the engineer, a legible copy of all batch records identified with lot number and mix design number.

901.09.2 Hauling Equipment: Ensure that hauling equipment is watertight and capable of discharging concrete at a controlled rate without segregation.

901.09.2.1 Truck Mixer: Provide revolving-drum truck mixers, equipped with tanks for carrying any additional portion of the mixing water and capable of dispensing to the nearest gallon. Replace pick-up and throw-over blades in the mixing drum when worn beyond the limit recommended by the manufacturer. Have available a copy of the manufacturer's design, showing dimensions and arrangements of blades in reference to original height and depth.

Equip truck mixers with electrically or mechanically actuated revolution counters. Locate counters to provide safe and convenient inspection.

In a prominent place, attach to each truck mixer a metal plate on which is plainly marked the maximum rated capacity of the drum in terms of concrete volume and rotation speed for both agitating and mixing speeds.

901.9.2.2 Agitator Hauling Equipment: Furnish agitators with blades or paddles to effectively agitate the mix and prevent segregation. Provide covers when directed.

Attach to each agitator in a prominent place, a metal plate on which is plainly marked the designed uses for the equipment, the maximum rated capacity in terms of concrete volume, and agitation speed.

901.9.2.3 Non-Agitator Hauling Equipment: Ensure that the bodies of non-agitating hauling equipment are clean, smooth, metal, and mortar-tight containers. Provide covers when directed.

901.09.3 Portable (Volumetric) Mixers: Provide portable mixers with a minimum capacity of one cubic yard and capable of accurately and uniformly mixing and discharging concrete without segregation.

901.10 BATCHING AND MIXING. Thoroughly mix concrete in a mixer of an approved size and type, which will ensure uniform distribution of materials throughout the mix.

Do not use mixers with worn blades or excessive build-up. Replace pick-up and throw-over blades or mixing paddles in the mixing drum or mixing unit when worn beyond the limit recommended by the manufacturer. Have available a copy of the manufacturer's design, showing dimensions and arrangements of blades in reference to original height and depth.

Begin mixing operations within 15 minutes after addition of cement to the aggregates. When there is an interruption to the mixing operations, thoroughly clean the mixer. Remove the entire contents of the mixer from the drum before placing materials for a succeeding batch. Add a portion of mixing water in advance of cement and aggregates. Do not use a mixer having a rated capacity of less than one cubic yard or charge a mixer in excess of its rated capacity. The minimum size batch shall be one cubic yard.

901.10.1 Central Plant and Site Mixing: Mix concrete until uniformity is achieved but not less than 60 seconds. Mixing time begins after all materials are in the mixer. Mixing time ends when the discharge chute opens. Ensure that the mixer is equipped with an approved timing device, which automatically locks the discharge lever when charging the drum and releases it at the end of the mixing period. During mixing, operate the mixer at its designed drum speed as shown on the manufacturer's nameplate on the mixer.

901.10.2 Truck Mixing: In accordance with 901.09, measure aggregates and cementitious materials for concrete and charge into the drum at the proportioning plant.

Ensure that the size of the batch does not exceed the maximum rated mixing capacity as stated by the manufacturer and stamped on a metal plate on the mixer. When using a truck mixer for complete mixing, mix each batch at designated mixing speed until uniformity is achieved, but not less than 70 revolutions. Ensure that all materials, including mixing water, are in the mixer drum before actuating the revolution counter or taking an initial reading. Ensure that any additional revolutions during transit are at the designated agitating speed.

Add a minimum of 75 percent of the prescribed amount of batch water at the plant. If the slump is low at the jobsite, add up to the “maximum water that can be added at jobsite” as indicated on the Batch Certification form. Ensure that water added at the jobsite does not exceed the maximum allowable water-cementitious material ratio or exceed the maximum allowable slump by more than 1/4 inch. Reject the load if these criteria are exceeded. Add water and/or admixtures at the job site in one or two increments with additional mixing within the range of 20 to 30 revolutions at designated mixer speed for each increment.

When adding to a partial load, add only a proportional amount of water or admixtures. Follow the manufacturer's recommendations when adding and mixing admixtures to the mix.

Perform slump, air, temperature, and unit weight tests, and mold cylinders after the addition of all components into the mix.

901.10.3 Partial Mixing at Central Plant (Shrink Mixing): When partially mixing at a central plant, reduce the mixing time to a minimum of 30 seconds. Complete required mixing in a truck mixer at mixing speed until uniformity is achieved but not less than 10 revolutions.

901.10.4 Time Limitations: Ensure that the maximum time from the addition of cement to the mix to final placement of the concrete is 90 minutes or a maximum of 300 revolutions, whichever occurs first. When transport is by non-agitator truck, ensure that the maximum time from the addition of cement to the mix to final placement of the concrete is 45 minutes. The engineer may reduce the maximum allowable time for any observed conditions contributing to rapid loss of plasticity or uniformity of the concrete.

For special applications, the stated time limitations may be modified based on trial batch results.

901.10.5 Hauling Equipment: Transport fresh concrete in a truck mixer, agitator, or other certified equipment. Non-agitator trucks are only allowed for pavement concrete. Ensure that the volume of mixed concrete transported in an agitator truck at agitation speed is in accordance with the manufacturer's specified rating.

901.10.6 Portable Mixing: Obtain written approval from the Chief Construction Engineer to use portable or volumetric mixers for PCCP patching and minor structure concrete.

901.10.7 Delivery: Provide sufficient plant capacity and transporting equipment to ensure delivery at the required rate. Ensure that methods and rate of delivery and handling of concrete facilitate placement, without damage to the structure or fresh concrete.

901.11 WEATHER AND TEMPERATURE LIMITATIONS. Concrete used in precast/prestress structural elements may be exempt from the following temperature limitations at the determination of the Construction Fabrication Engineer.

Prepare for rain and hot or cold weather concrete placement well in advance of these events.

The contractor is responsible for proper mixing, placing, and curing of all concrete. At no cost to the Department, remove and replace any unacceptable concrete as determined by the Department.

901.11.1 Cold Weather Limitations: Do not place concrete when the internal temperature of the concrete is below 45°F nor on frozen subgrade or into forms that are below 32°F.

901.11.1.1 PC Mixes: Discontinue concreting operations when a descending air temperature at the jobsite, in the shade, and away from artificial heat, reaches 35°F or NOAA forecasts the temperature to be less than 32°F within the 24-hour period following placement. Do not resume PC concreting operations until an ascending air temperature at the jobsite, in the shade, and away from artificial heat, reaches 32°F; provided the high temperature forecasted by NOAA is above 35°F and remains above 32°F for a minimum of 24 hours.

901.11.1.2 Binary Mixes: Discontinue concreting operations when a descending air temperature at the jobsite, in the shade, and away from artificial heat, reaches 40°F or NOAA forecasts the temperature to be less than 35°F within the 36-hour period following placement. Do not resume concreting operations until an ascending air temperature at the jobsite, in the shade, and away from artificial heat, reaches 40°F; provided the high temperature forecasted by NOAA is above 45°F and remains above 40°F for a minimum of 36 hours.

901.11.1.3 Ternary Mixes: Discontinue concreting operations when a descending air temperature at the jobsite, in the shade, and away from artificial heat, reaches 45°F or NOAA forecasts the temperature to be less than 40°F within the 48-hour period following placement. Do not resume concreting operations until an ascending air temperature at the jobsite, in the shade, and away from artificial heat, reaches 45°F; provided the high temperature forecasted by NOAA is above 50°F and remains above 45°F for a minimum of 48 hours.

Written authorization from the Chief Construction Engineer is required for all concrete operations outside these cold weather limitations.

901.11.2 Hot Weather Limitations: During hot weather concreting, it is critical to reduce the evaporation rate from concrete to minimize plastic shrinkage cracking by having an appropriate concrete mix design, placement methods, and curing operations. Furthermore, additional moisture loss precautions may be essential when other environmental conditions (i.e. relative humidity, air temperature, and wind velocity) accelerate water evaporation from the concrete.

Hot weather limitations commence when the internal temperature of the concrete during placement, exceeds 85°F. If these conditions exist, maintain an internal concrete placement temperature less than 90ºF or submit concrete trial-batch test results for the concrete mix designs conforming to the requirements for production during hot weather conditions.

The hot weather trial-batch acceptance criteria shall meet the following requirements:

1. Maintain a minimum internal concrete temperature of 94°F throughout the trial-batching process.

2. After initial mixing, hold the trial batch in the mixer for 90 minutes. During this period, turn the drum intermittently for 30 seconds every five minutes. In between the intermittent turning of the drum, cover the drum opening with an impermeable cover to prevent moisture loss and to maintain heat. At the end of the 90-minute period, remix the trial batch a minimum of one minute and then test for slump and air content.

3. After completion of a 90-minute mixing period, ensure that the trial-batch has the desired workability, with slump and air content within the specified range as shown in Table 901-3. Allow the addition of water if the slump is below the target range but do not exceed the maximum water-to-cementitious material ratio. Remix a minimum of two minutes after addition of second water. Furthermore, ensure that concrete temperature is not less than 94°F at any time during the trial batch testing.

Concrete placed at a temperature exceeding 90ºF that fails to meet the hot weather trial-batch acceptance criteria shall be removed and replaced at no cost to the Department.

The contractor is responsible for proper mixing, placing, and curing of concrete as determined by the Department.

Regardless of any hot weather precaution taken, reject all concrete attaining an internal temperature in excess of 99ºF during placement.

901.11.3 Rain Protection: Prior to any concreting operations, have available at the jobsite sufficient plastic sheeting material to prevent rainwater from marring or leaving indentations in any fresh concrete.

Lap sections of plastic sheeting a minimum of 18 inches and extend coverage beyond edges so that edges are not marred by falling rainwater. Secure plastic sheeting so that it will remain in place to protect the surface. As soon as conditions permit, reapply all curing compound washed away by the rain. Repair all areas of tining or surface finishing marred by rain or plastic sheeting coverage. Repair all rain-damaged areas at no cost to the Department.

901.12 MASS CONCRETE.

901.12.1 Description: Mass concrete is defined as a structural concrete placement having a least dimension of 48 inches or greater, or if designated on the plans or in the project specifications as being mass concrete. Structural Class S concrete is exempt from mass concrete requirements.

901.12.2 General: Submit proposals for the mass concrete mix design, analysis, temperature monitoring, and control, including insulation and methods, to the Department for review and acceptance a minimum of 30 days prior to the placement of any mass concrete.

901.12.3 Materials: The structural class designation for mass concrete is Class MASS (A1, A2, or A3) as shown in Table 901-3.

901.12.3.1 Cement/Cementitious Combination: Use Type II portland cement. Replace portland cement with fly ash at 20 percent to 50 percent by weight or replace with slag cement at 50 percent to 70 percent by weight or a ternary mix meeting specification requirements. Certify that the cementitious combination generates a heat of hydration of not more than 70 calories/gram at 7 days as determined by ASTM C186 or ASTM C1702.

901.12.3.2 Aggregates: Use Type B or D aggregate gradation for mass concrete. See 1003.08.3.

901.12.3.3 Admixtures: Do not use accelerating admixtures in mass concrete.

901.12.4 Construction: Produce a structure free from thermal cracks. Place mass concrete continuously to eliminate cold joints.

Control differential temperatures by appropriate use of insulated forms, curing blankets, or other acceptable methods.

If during the first 48 hours after placement, the temperature differential nears 35ºF, take corrective measures immediately to remain within the limits. Furthermore, revise the plan to maintain the limits on differential temperature on any remaining placements of mass concrete. Obtain the engineer's acceptance of the revised plan prior to implementation.

Strength gain and cooling of the mass concrete placements can take a long time. Take all such time and strength considerations into account when planning construction activities.

901.12.4.1 Analysis and Monitoring: Submit an analysis to the engineer of the projected thermal developments within the mass concrete elements for the anticipated concrete and ambient temperatures, along with the proposed mix design and construction methods. Include a copy of model results, with site and element specific data, and any electronic files. Describe the measures and procedures intended to maintain, monitor, and control the

temperature differential between the interior and exterior of the mass concrete elements. A maximum temperature during curing of 160ºF and a maximum differential temperature of 35°F is allowed. An abbreviated submittal may be allowed for previously approved mass concrete mix designs.

901.12.4.2 Monitoring Devices: Provide temperature-monitoring devices to record temperature development between the interior and the exterior of the element at points acceptable to the engineer. Monitor a minimum of two independent sets of interior and exterior points for each element to provide redundancy. Locate the monitoring points at the geometric center of the element for the interior point and two inches from the surface along the shortest line from the geometric center to the nearest surface of the element for the exterior point.

Monitoring devices shall be automatic sensing and recording instruments that record information at a maximum interval of one hour. Calibrate monitoring devices to the manufacture's recommendations. These devices shall operate within the temperature range of 0 to 180ºF with an accuracy of ± 2ºF. Take readings and record the temperature data at intervals no greater than 6 hours to ensure that the automatic devices are working properly and that the temperatures are within allowable limits. The intervals of one and six hours shall begin immediately after casting is complete and shall continue until the maximum temperature differential is reached and begins to drop. Transmit these readings to the engineer daily.

Prior to the placement of mass concrete, perform a test of the automatic and manual thermal sensing and recording equipment to ensure they are operational.

901.12.5 Payment for Mass Concrete: Materials, labor, equipment, and incidental items associated with mass concrete and controlling the heat of hydration are paid for under Section 805.

901.13 ACCEPTANCE AND PAYMENT SCHEDULES. Acceptance and payment schedules in Table 901-4 and Table 901-6 apply to all cast-in-place structural portland cement concrete. Table 901-6 applies to Classes P1, P2, and P3; whereas, Table 901-4 does not apply. Acceptance and payment schedules in Table 901-5 apply to all minor structure portland cement concrete. Acceptance and payment schedules for portland cement concrete pavement are shown in Table 601-1 of Section 601.

Table 901-3[12]
Master Proportion Table for Portland Cement Concrete

	Average Compressive Strength, psi at 28 days	Grade of Coarse Aggregate[1]	Surface Resistivity[2] (kΩ-cm)	Maximum Water/Cementitious Ratio, lb/lb	Air Content (Percent by volume)[3]	Slump Range [5], inches		
						Non-Vibrated[4]	Vibrated	Slip Form Paving [6]
Structural Class [7]								
A1	4,500	57M, 67, 89M[9], B,D	22	0.45	2 - 7	2-5	2-4 [4]	N/A
A2	6,500 [11]	57M, 67, 89M[9], B,D	22[11]	0.45	2 - 7	2-5	2-4 [4]	N/A
A3	9,000 [11]	57M, 67, 89M[9], B,D	22[11]	0.36	2 - 7	2-5	2-4 [4]	N/A
P1	6,000 [8]	57M, 67, 89M[9], B,D	22	0.44	2 - 7	N/A	2-6 [10]	N/A
P2	8,500 [8]	57M, 67, 89M[9], B,D	22	0.40	2 - 7	N/A	2-6 [10]	N/A
P3	10,000 [8]	57M, 67, 89M[9], B,D	22	0.40	2 - 7	N/A	2-6 [10]	N/A
S	4,500	B, D	22	0.53	2 - 7	6-8	N/A	N/A
MASS(A1)	4,500	B, D	22	0.53	2 - 7	N/A	2-4 [4]	N/A
MASS(A2)	6,500 [11]	B, D	22[11]	0.46	2 - 7	N/A	2-4 [4]	N/A
MASS(A3)	9,000 [11]	B, D	22[11]	0.36	2 - 7	N/A	2-4 [4]	N/A
Minor Structure Class [7]								
M	3,000	57M, 67, 89M[9], B,D	N/A	0.56	2 - 7	2-5	2-4 [4]	1-2.5
R	1,800	57M, 67, B, D	N/A	0.70	2 - 7	2-5	2-4 [4]	N/A
Pavement Type [7]								
B	4,000	B, D	N/A	0.53	2 - 7	N/A	2-4	1-2.5
D	4,000	B, D	N/A	0.53	2 - 7	N/A	2-4	1-2.5
E	4,000	57M, 67, 89M[9], B,D	N/A	0.40	2 - 7	N/A	2-4	1-2.5

N/A – Not Applicable
[1] Combined aggregate gradation shall comply with the requirements of 1003.08.2.
[2] Value based on a 4-inch X 8-inch cylinder tested at 28 days of age.
[3] See 901.08.3.
[4] Allow an 8-inch maximum slump if water reducers are used.
[5] Additional allowance in slump range to be approved by the Chief Construction Engineer.
[6] Also slump range for other concrete placed by extrusion methods.
[7] See 901.08.1 for allowable types of cement.
[8] Values shown represent the minimum compressive strengths allowed for all test cylinders.
[9] Grade 89M coarse aggregate shall be used only when specified or permitted.
[10] No more than 2-inch slump differential for any design placement. Allow 8-inch maximum slump if water reducers are used.
[11] Average Compressive Strength, psi and Resistivity (kΩ-cm) at 56 days.
[12] Dry-cast concrete for concrete pipe is exempt from Table 901-3. See Section 1016 specifications.

Table 901-4
Acceptance and Payment Schedules
Cast-In-Place Structural Concrete

Average Compressive Strength per Lot, psi (28 to 31 days: A1 Mixes) (56 to 59 days: A2 & A3 Mixes)	
Class A1, S & MASS (A1)	**Percent of Contract Unit Price[1]**
4500 & above	100
4301 - 4499	98
4000 - 4300	90
below 4000	50 or remove and replace[2]
Class A2 & MASS (A2)	
6500 & above	
6301 - 6499	100
6000 - 6300	98
Below 6000	90
	50 or remove and replace[2]
Class A3 & MASS (A3)	
9000 & above	100
8801 - 8999	98
8500 - 8800	90
Below 8500	50 or remove and replace[2]

[1]When concrete is part of an item or not a direct pay item, lot sizes, sampling, and acceptance testing for the required quantities will be in accordance with 805.11. The value for each cubic yard required will be assessed at $350 for the purpose of applying payment adjustment percentages. The amount of payment adjustment for the quantity of concrete involved will be deducted from payment.

Acceptance and payment schedules shall apply to the contract item itself for cast-in-place piling.

[2]When the average compressive strength of **any batch in a lot** is less than the specified strength a prompt investigation will be made. If concrete is allowed to remain in place by the Chief Engineer, payment will be based on 50 percent of the contract price unless associated cylinders were improperly molded or tested and investigative core strength results are above design strength (f'c). If concrete is not allowed to remain in place, the identifiable deficient areas shall be removed and replaced at no direct pay.

Table 901-5
Acceptance and Payment Schedules
Cast-In-Place Minor Structure Concrete

Average Compressive Strength, psi (28 to 31 days)		
Class M	Class R	Percent of Contract Price [1]
3000 & Above Below 3000	1800 & Above Below 1800	100 50 or remove and replace [2]

[1]When concrete is part of an item or not a direct pay item, sampling, and acceptance testing for the required quantities shall be in accordance with this section. The value for each cubic yard of concrete required will be assessed at $350 for the purpose of applying payment adjustment percentages. The amount of payment adjustment for the quantity of concrete involved will be deducted from payment.

[2]When the average compressive strength is less than 3,000 psi for Class M, and 1,800 psi for Class R, an investigation will be made. If concrete is allowed to remain in place by the Chief Engineer, payment will be based on 50 percent of the contract price.

Any cores obtained in these investigations are for evaluation purposes only. Payment is based on original acceptance samples.

Table 901-6
Acceptance and Payment Schedules
Structural Concrete

Surface Resistivity per Lot, kΩ-cm (28 to 31 days: A1 Mixes) (56 to 59 days: A2 & A3 Mixes)	
Class A1, A2, A3, S, P1, P2, P3, S & MASS(A1,A2,A3)	Percent of Contract Price
22.0 & above	100
20.0 - 21.9	98
18.0 - 19.9	90
below 18.0	50 or remove and replace[1]

[1]When the average surface resistivity is less than 18.0 kΩ - cm, an investigation will be made. If concrete is allowed to remain in place by the Chief Engineer, payment will be based on 50 percent of the contract price. Any cores obtained in these investigations are for evaluation purposes only. Payment will be based on original acceptance samples.

PART X — MATERIALS

Section No. Page No.

1001 Portland Cement and Cementitious Materials 933
1002 Asphalt Cement, Emulsions, and Additives..... 935
1003 Aggregates..... 947
1004 Landscaping Materials 964
1005 Joint Materials for Pavements and Structures..... 968
1006 Thermoplastic Pipe..... 976
1007 Metal Pipe 978
1008 Paints 982
1009 Reinforcing Steel, Strand, and Wire Rope..... 988
1010 Fence and Guard Rail..... 991
1011 Concrete Curing Materials, Admixtures & Special Finishes..... 995
1012 Vacant..... 998
1013 Metals 999
1014 Timber, Timber Connectors, and Preservatives..... 1005
1015 Signs and Pavement Markings 1011
1016 Concrete Pipe & Precast Reinforced Concrete Drainage Units..... 1032
1017 Epoxy Resin Systems 1036
1018 Miscellaneous Materials..... 1040
1019 Geotextile Fabric and Geocomposite Systems..... 1047
1020 Traffic Signals 1051

Section 1001
Portland Cement and Cementitious Materials

1001.01 PORTLAND CEMENT. Use portland cement from the Approved Materials List and comply with AASHTO M 85. Alkali content calculated as sodium oxide equivalent shall not exceed 0.60 percent by weight.

1001.02 BLENDED HYDRAULIC CEMENT. Use blended hydraulic cement Type IP, Type IS, or Type IL from the Approved Materials List and comply with AASHTO M 240. The alkali content of blended hydraulic cement calculated as sodium oxide equivalent shall not exceed 0.60 percent by weight.

Type IP may contain up to 30 percent by weight of fly ash or up to 30 percent by weight of bottom ash, provided that the bottom ash is interground with the cement clinker. Fly ash and bottom ash shall comply with AASHTO M 295, Class C or F.

Type IS cement may contain up to 50 percent by weight of ground granulated blast-furnace slag. Grade 100 and Grade 120 ground granulated blast-furnace slag (slag cement) shall comply with AASHTO M 302.

Type IL portland limestone cement shall not be treated as blended cement for purposes of cement material substitution with fly ash and slag.

1001.03 MASONRY CEMENT AND MORTAR CEMENT. Comply with ASTM C91 for masonry cement. Comply with ASTM C1329 for mortar cement. Mix mortar cement in accordance with ASTM C270 or use pre-blended dry mortar cement complying with ASTM C1714 and mix according to the manufacturers recommendations.

1001.04 FLY ASH AND NATURAL POZZOLANS. Use fly ash from the Approved Materials List. Comply with AASHTO M 295 for Class C and Class F. Comply with ASTM C618 for Class N. Alkali content calculated in accordance with DOTD TR 531 shall not exceed 2.5 percent by weight. Fly ash and natural pozzolans with alkali contents greater than 1.5 percent may only be used with innocuous (non-reactive) aggregates.

1001.05 GROUND GRANULATED BLAST-FURNACE SLAG (SLAG CEMENT). Use Grade 100 or Grade 120 ground granulated blast-furnace slag from the Approved Materials List and comply with AASHTO M 302.

1001.06 MICROSILICA (SILICA FUME). Use microsilica (silica fume) from the Approved Materials List and comply with AASHTO M 307.

Section 1002
Asphalt Cement, Emulsions, and Additives

1002.01 ASPHALT MATERIALS. Asphalt cement and emulsions shall be from the Approved Materials List. Asphalt shall be prepared by the refining of petroleum. Asphalt shall be uniform in character, free from water, and shall not foam when heated to 350°F (177°C).

Refinery or supplier storage tanks, piping, retorts, booster tanks, and other equipment used in delivering, storing, or handling asphalt materials shall be kept clean and in good operating condition and shall be operated as to avoid contamination of the contents with foreign materials.

Final test results for asphalt materials will be applied to the proper table in this Section for conformance to specifications.

Samples taken at the refinery or supplier shall comply with specification requirements. When the refinery or supplier sample fails to meet these requirements, the material will be rejected and shall not be shipped to the jobsite.

When asphalt materials sampled at the point of delivery do not comply with specification requirements, and in the opinion of the engineer have resulted in an unsatisfactory product based on an investigation, the materials shall be removed and replaced or otherwise corrected at no direct pay. Payment adjustment, when required, shall apply to the quantity of material represented by the sample. If no specific pay item exists, then the invoice price for the material will be used.

1002.02 ASPHALT MATERIAL ADDITIVES.

1002.02.1 Anti-Strip: Anti-strip additives for asphalt materials shall be from the Approved Materials List. Anti-strip additives shall be tested in accordance with DOTD TR 317.

1002.02.2 Crumb Rubber: Waste Tire Rubber must be pre-qualified by the Materials Laboratory. The maximum size of rubber particles shall be 30 mesh crumb (90-100 percent passing the No. 30 sieve) with a maximum replacement of 10 percent by weight of asphalt material. No cryogenic crumb rubber is allowed.

1002.02.3 Polymers: Polymer additives that are pre-blended with the asphalt material will be allowed. In-line blending may be allowed with approval from the Materials Engineer Administrator.

1002.02.4 Warm Mix Additives (WMA): A WMA is foamed water or a chemical additive that allows for asphalt to be mixed and placed at a

lower temperature, while maintaining or enhancing the ease of compaction. WMA shall be from the Approved Materials List.

1002.02.5 Fibers: A cellulose or mineral fiber, used to prevent draindown or to serve as filler must be pre-approved by the Department.

1002.02.5.1 Cellulose Fiber: Comply with the following:

Table 1002-1
Cellulose Fiber Properties

Property	Requirements
Fiber Length	6 mm, max.
Passing No. 100 (150 µm) Sieve[1]	60% - 80%
Ash Content[2]	13% - 23%
pH[3]	6.5 – 8.5
Oil Absorption[4]	4 to 6 times fiber weight
Moisture Content[5]	<5% by weight

[1] Sieve Analysis: This test is performed using an Alpine Air Jet Sieve (Type 200 LS). A representative five gram sample of fiber is sieved for 14 minutes at a controlled vacuum of 11 psi. The portion remaining on the screen is weighed. Alternate methods may be allowed if approved by the Materials Engineer Administrator.

[2] Ash Content: A representative 2-3 gram sample of fiber is placed in a tared crucible and heated between 1100ºF and 1200ºF (595ºC and 650ºC) for not less than two hours. The crucible and ash are cooled in a desiccator and reweighed.

[3] pH Test: Five grams of fiber are added to 100 ml of distilled water, stirred and let sit for 30 minutes. The pH is determined with a probe calibrated with pH 7.0 buffer.

[4] Oil Absorption Test: Five grams of fiber are accurately weighed and suspended in an excess of mineral spirits for not less than five minutes to ensure total saturation. It is then placed in a screen mesh strainer (approximately 0.5-square millimeter hole size) and shaken on a wrist action shaker for ten minutes (approximately 1-1/4-inch motion at 240 shakes/minute). The shaken mass is then transferred without touching, to a tared container and weighed. Results are reported as the amount (number of times its own weight) the fibers are able to absorb.

[5] Moisture content: Ten grams of fiber are weighed and placed in a 250 ºF (121ºC) forced air oven for two hours. The sample is then reweighed immediately upon removal from the oven.

1002.02.5.2 Mineral Fiber: When mineral fiber is used, a cationic sizing will be required. Introduce the cationic sizing at rates recommended by the manufacturer to ensure proper dispersion of the fibers. Comply with the following:

Table 1002-2
Mineral Fiber Properties

Property	Requirements
Fiber Length[1]	6 mm maximum
Fiber Thickness[2]	0.005 mm maximum

[1] The Fiber Length is determined according to the Bauer McNett fractionation or alternate approved by the Materials Engineer Administrator.
[2] Mean Value of at least 200 fibers in a phase contrast microscope. An alternate method may be allowed if approved by the Materials Engineer Administrator.

Table 1002-3
Performance Graded Asphalt Cements

Property	AASHTO Test Method	PG82-22rm[1,7]	PG76-22m[7]	PG70-22m[7]	PG67-22	PG58-28
		Spec.	Spec.	Spec.	Spec.	Spec.
Tests on Original Binder:						
Rotational Viscosity @ 135°C, Pa·s [2]	T 316	3.0	3.0	3.0	3.0	3.0
Dynamic Shear, 10 rad/s, G*/Sin Delta, kPa	T 315	1.00+ @ 82°C	1.00+ @ 76°C	1.00+ @ 70°C	1.00+ @ 67°C	1.00+ @ 58°C
Dynamic Shear, 10 rad/s, Phase Angle, °	T 315	—	75° @ 76°C	—	—	—
Flash Point, °C	T 48	232+	232+	232+	232+	232+
Solubility, % [3]	T 44	N/A	99.0+	99.0+	99.0+	99.0+
Separation of Polymer, 163°C, 48 hours, degree C difference in R & B from top to bottom [4]	ASTM D7173 AASHTO T 53	—	2-	2-	—	—
Tests on Rolling Thin Film Oven Residue:	T 240					
Mass Change, %	T 240	1.00-	1.00-	1.00-	1.00-	1.00-
Dynamic Shear, 10 rad/s, G*/Sin Delta, kPa	T 315	2.20+ @ 82°C	—	—	2.20+ @ 67°C	2.20+ @ 58°C
Elastic Recovery, 25°C, 10 cm elongation, %[5]	T 301	60+	—	—	—	—
Multiple Stress Creep Recovery (MSCR), 67ºC, Jnr(3.2 kPa)	T 350	—	0.5-	2.0-	—	—
Multiple Stress Creep Recovery (MSCR), 67ºC, % Recovery (3.2 kPa)	T 350	—	Meets curve[6]	Meets curve[6]	—	—
Ductility, 25°C, 5 cm/min, cm	T 51	—	—	—	90+	—
Tests on Pressure Aging Vessel Residue:	R 28					
Dynamic Shear, @ 26.5°C, 10 rad/s, G* Sin Delta, kPa	T 315	5000-	6000-	6000-	5000-	5000- @ 19°C
Bending Beam Creep Stiffness, S, MPa @ -12°C.	T 313	300-	300-	300-	300-	300- @ -18°C
Bending Beam Creep Slope, m value,@ -12°C	T 313	0.300+	0.300+	0.300+	0.300+	0.300+ @ -18°C

[1]Tank mixers are required. Submit written documentation of tank cleaning annually to the Materials Laboratory. Submit written certificates of analysis from the asphalt binder supplier confirming rubber source and size distribution of rubber used. Furnish to the Materials Laboratory.

[2]The rotational viscosity will be measured to determine product uniformity. The rotational viscosity measured by the supplier shall be noted on the Certificate of Delivery. A binder having a rotational viscosity of 3.0 Pa·s or less will typically have adequate mixing and pumping capabilities. Binders with rotational viscosity values higher than 3.0 Pa·s should be used with caution and only after consulting with the supplier as to any special handling procedures and guarantees of mixing and pumping capabilities.

[3]Not all polymers are soluble in the specified solvents. If the polymer modified asphalt digested in the solvent will not pass the filter media, a sample of the base asphalt used in making the polymer modified asphalt should be tested for solubility. If the solubility of the base asphalt is at least 99.0%, the material will be considered as passing.
[4]Prepare samples per ASTM D7173. Determine softening point of top and bottom per AASHTO T 53. Not required when crumb rubber is used. Separation may be waived for plant blending with the approval of the Materials Engineer.
[5]AASHTO T 301 except elongation shall be 10 cm.
[6]As defined in AASHTO M 332
[7] Use a maximum 10 % crumb rubber.

Table 1002-4
Emulsified Polymerized Asphalt[1]

Property	AASHTO Test Method	Percent of Contract Unit Price							
		CRS-2P			CSS-1hP			Polymer Emulsion Tack (PET)	
		Specs	Deviations		Specs	Deviations		Specs	Deviations
		100	80	50 or Remove[2]	100	80	50 or Remove[2]	100	50 or Remove and Replace[2]
Viscosity, Saybolt Furol @ 50°C, s	T 59	100 – 400	—	—	—	—	—	—	—
Viscosity, Saybolt Furol @ 25°C, s	T 59	—	—	—	20 – 100	—	—	20 – 100	—
Storage Stability,24Hr.,%	T 59	1.0-	—	—	1.0-	—	—	—	—
Settlement, 5-day, %	T 59	5.0-	—	—	—	—	—	—	—
Identification Test	T 59	Pass	—	Fail	—	—	—	—	—
Particle Charge	T 59	Pos.	—	Neg.	Pos.	—	Neg.	—	—
Residue by Distillation, % by wt. [3]	T 59	65+	61-64	60-	62+	57-61	56-	63+	62-
Oil Distillate by Volume, %	T 59	3.0-	—	—	—	—	—	—	—
Sieve Test, % (Retained on 850 µm)	T 59	0.1-	—	—	0.1-	—	—	—	—
Tests on Residue by Distillation:									
Penetration, 25°C, 100 g, 5 s, dmm	T 49	100 – 200	80–99 201–225	79- 226+	40 – 90	30–39 91–100	29- 101+	60 – 150	59- 151+
Softening Point (Ring & Ball), °C	T 53	38.0	32.1-37.9	32.0	57+	51.1- 56.9	51-	—	—
Solubility, %	T 44	97.5+	—	—	97.5+	—	—	97.5+	—
Ductility, 25°C 5 cm/min, cm	T 51	—	—	—	70+	56–69	55-	—	—
Tests on Residue by Evaporation[4]:									
Force Ductility Ratio, (f_2/f_1, 4°C, 5 cm/min, f_2 at Second peak)	T 300	0.30+	0.21-0.29	0.20-	—	—	—	—	—
Elastic Recovery, 10°C @ 20 cm elongation, %	T 301	58+	51–57	50-	—	—	—	58+	

[1] The Department does not allow the addition of latex, rubber or other additives to emulsified polymerized asphalt.

[2] At the Chief Engineer's option.

[3] For CSS-1hP, hold the temperature for the Distillation test below 280°F (138°C). Higher temperatures may cause the polymers to break down.

[4] Obtain residue asphalt for force ductility and elastic recovery by evaporation (Oven) rather than distillation (Aluminum-alloy Still).

Table 1002-5
Non-Tracking Tack Coats – Cold Applied

Property	AASHTO Test Method	NTSS-1HM		CBC-1H	
		100% Pay	**50% Pay or Remove and Replace[1]**	**100% Pay**	**50% Pay or Remove and Replace[1]**
Viscosity, Saybolt Furol @ 25°C, s	T 59	15 - 100	—	15 - 100	—
Storage Stability, 24 Hour, %	T 59	1.0-	—	1.0-	—
Settlement, 5 Days, %	T 59	5.0-	—	—	—
Residue by Distillation[3], %	T 59	50+	49-	58+	57-
Oil Distillate, %	T 59	1.0-	—	—	—
Sieve Test, (Retained on the 850 μm), %[2]	T 59	0.3-	—	0.1-	—
Tests on Residue					
Penetration @ 25°C, 100g, 5s, d_{mm}	T 49	20-	—	40 - 90	39- 91+
Softening Point, Ring and Ball, °C	T 53	65+	64-	49+	48-
Solubility, %	T 44	97.5+	—	—	—
DSR @ 82°C; G*/Sin δ, 10 rad / s, kPa	T 315	1.0+	—	—	—

[1] At the Chief Engineer's option.
[2] Sieve tests may be waived if no application problems are present in the field.
[3] For CBC-1H only: Exception to T59 Distillation – Bring the temperature on the lower thermometer slowly to 350°F. Maintain at this temperature for 20 minutes. Complete total distillation in 60 +/- 5 minutes from the first application of heat.

Table 1002-6
Cationic Emulsified Asphalt (CSS-1h)

Property	AASHTO Test Method	CSS-1h		
		Specifications	Deviations	
		100	80	50 or Remove and Replace[1]
Viscosity, Saybolt Furol @ 50°C, s	T 59	—	—	—
Viscosity, Saybolt Furol @ 25°C, s	T 59	20 – 100	—	—
Residue by Distillation, % by wt.	T 59	57+	52 – 56	51-
Oil Distillate by Volume, %	T 59	—	—	—
Particle Charge	T 59	Pos.	—	Neg.
Sieve Test, % (Retained on 850 µm)	T 59	0.1-	—	—
Settlement, 5-day, %	T 59	5.0-	—	—
Tests on Residue by Distillation:				
Penetration, 25°C, 100 g, 5 s, dmm	T 49	40 – 90	30 – 39 91 – 100	29- 101+
Solubility, %	T 44	97.5+	---	---
Ductility, 25°C 5 cm/min, cm	T 51	40+	26 – 39	25-
Viscosity, 135°C, Pa·s	T 316	—	—	—

[1] At the Chief Engineer's option.

Table 1002-7
Anionic Emulsified Asphalt (SS-1h)

Property	AASHTO Test Method	SS-1h		
		Specifications	Deviations	
		100	80	50 or Remove and Replace[1]
Viscosity, Saybolt Furol @ 25°C, s	T 59	20 – 100	—	—
Residue by Distillation, % by wt.	T 59	57+	52 – 56	51-
Sieve Test, % (Retained on 850 µm)	T 59	0.1-	—	—
Cement Mixing	T 59	2-	—	—
Settlement, 5-day, %	T 59	5.0-	—	—
Tests on Residue by Distillation:				
Penetration, 25°C, 100 g, 5 s, dmm	T 49	40 – 90	30 – 39 91 – 100	29- 101+
Solubility, %	T 44	97.5+	—	—
Ductility, 25°C, 5 cm/min, cm	T 51	40+	26 – 39	25-

[1] At the Chief Engineer's option.

Table 1002-8
MC Cutback Asphalt

Property	AASHTO Test Method	MC-30			MC-70		
		Specifications		Deviations	Specifications		Deviations
		100	80	50 or Remove[1]	100	80	50 or Remove and Replace[1]
Flash Point, Open Tag, °C	T 79	38+	—	—	38+	—	—
Viscosity, Saybolt Furol @ 25°C, s	T 72	75 - 150	58 – 74 151 - 167	57- 168+	—	—	—
Viscosity, Saybolt Furol @ 60°C, s	T 72	—	—	—	35 – 70	24 – 34 71 – 80	23- 82+
Distillation Test, Distillate Percentage by Volume of Total Distillate to 360°C	T 78						
To 225°C		0.0- 25.0	—	—	0.0- 20.0	—	—
To 260°C		40.0- 70.0	—	—	20.0- 60.0	—	—
To 316°C		75.0- 93.0	—	—	65.0- 90.0	—	—
Residue from Distillation to 360°C, Volume % of Sample by Difference	T 78	50.0+	45.1-49.9	45.0-	55.0+	50.1-54.9	50.0-
Tests on Residue by Distillation:							
Penetration, 25°C, 100 g, 5 s, dmm	T 49	120 – 250	102 - 119 251 - 268	101- 269+	120 - 250	102 – 119 251 – 268	101- 269+
Solubility, %	T 44	99.0+	98.6–98.9	98.5-	99.0+	98.6–98.9	98.5-
Ductility, 25°C for Residues To 200 Penetration 5 cm/min, cm	T 51	100+	76 - 99	75-	100+	76 – 99	75-
Ductility, 15.5°C for Residues of 200 – 300 Penetration, 5 cm/min, cm	T 51	100+	76 - 99	75-	100+	76 - 99	75-

[1] At the Chief Engineer's option.

Table 1002-9
Asphalt Emulsion Prime (AEP)

	AASHTO Test Method	Percent of Contract Unit Price		
		Specification		Deviations
		100	80	50 or Remove and Replace [1]
Viscosity, Saybolt Furol @ 50°C, s	T 59	15-100	10-15 101-200	9- 201+
Residue by Evaporation, % by wt.	T 59	50+	46-49	45-
Oil Distillate by Volume, %	T 59	25.0-	—	—
Sieve Test (retained on 850 µm), %	T 59	0.1-	—	—
Storage Stability, 24 h, %	T 59	1.0-	—	—
Settlement, 5 Days, %	T 59	5.0-	—	—
Test on Residue by Evaporation:				
Penetration, 25°C, 100 g, 5 s, dmm	T 49	250+	—	—
Solubility, %	T 44	97.5+	—	—

[1] At the Chief Engineer's option.

Table 1002-10
Cationic Emulsified Petroleum Resin (EPR-1)

	AASHTO Test Method	Percent of Contract Unit Price		
		Specification		Deviations
		100	80	50 or Remove and Replace[1]
Viscosity, Saybolt Furol @ 25°C, s	T 59	15- 100	10-15 101-150	9- 151+
Residue by Evaporation, % by wt.	T 59	57+	52-56	51-
Particle Charge	T 59	Pos.	—	Neg.
Sieve Test (Retained on 850 µm), %	T 59	0.1-	—	—
Settlement, 5 Days, %	T 59	5.0-	—	—

[1] At the Chief Engineer's option.

Table 1002-11
Hot Applied Modified Asphalt Cements for Asphalt Surface Treatment (PAC 15)

Property	AASHTO Test Method	PAC 15	
		Spec.	Deviation
		100	90 or Remove and Replace[1]
Penetration @ 25°C, 100 g., 5 s, dmm	T 49	75-125	74- 126+
Viscosity, @ 60°C, Pa·s	T 202	150+	149-
Rotational Viscosity @ 135°C, Pa·s[2]	T 316	3.0-	3.1+
Force Ductility Ratio, f_2/f_1, 4°C, 5cm/min, f_2 @ 30 cm elongation[3]	T 300	0.30+	0.29-
Softening Point, °C	T 53	45+	44-
Flash Point, °C	T 48	230+	228-
Separation of Polymer, 163°C, 48 hours difference in R & B from top to bottom sample, °C [4]	ASTM D 7173 AASHTO T 53	2-	—
Tests on Residue from Rolling Thin Film Oven Test:	T 240		
Elastic Recovery, 25°C, 10 cm elongation, % [5]	T 301	55+	54-
Penetration Retention 25°C, RTFO/Original	T 49	0.60+ 1.00-	0.59- 1.01+

[1] At the Chief Engineer's option.
[2] Measure rotational viscosity to determine product uniformity. The supplier shall note his measured rotational viscosity on the Certificate of Delivery. A binder having a rotational viscosity of 3.0 Pa·s or less will typically have adequate mixing and pumping capabilities. Use binders with rotational viscosity values higher than 3.0 Pa·s with caution and only after consulting with the supplier as to any special handling procedures and guarantees of mixing and pumping capabilities.
[3] AASHTO T 300 except the second peak (f_2) shall be defined as the stress at 30 cm elongation.
[4] Prepare samples per ASTM D7173. Determine softening point of top and bottom per AASHTO T 53.
[5] AASHTO T 301 except the elongation shall be 10 cm.

Table 1002-12
Non-Tracking Hot Applied Polymer (NTHAP) Tack Coat

TYPICAL PHYSICAL PROPERTIES

PARAMETER	TEST METHOD	MIN	MAX
Rotational Viscosity @ 149 °C, Pa·s	AASHTO T316	—	3.0*
Penetration @ 25 °C , dmm	ASTM D5	—	25
Softening Point, °C	ASTM D36	70	99
Original DSR @ 82 °C , G*/sin δ, kPa	AASHTO T315	1.0	—
Creep Stiffness, m-value @ 0 °C on original binder	AASHTO T313	0.285	—

* Rotational viscosity shall be waived if material can be successfully applied in the field.

Section 1003
Aggregates

1003.01 GENERAL. All aggregates shall be environmentally acceptable for the intended use and shall be from an approved SiteManager® Producer/Supplier. Additionally stone, gravel, slag, lightweight aggregates, and coarse and manufactured sand sources shall be from the Approved Materials List. Recycled portland cement concrete (RPCC), reclaimed asphalt pavement (RAP), blended calcium sulfate (BCS), and fine natural sand are required to be from an approved Producer/Supplier. For source approval, comply with the requirements in this subsection and any other appropriate section. Provide global positioning coordinates (GPS) for the aggregate source site location.

Unless otherwise defined, coarse aggregates have material predominately retained on the No. 4 (4.75 mm) sieve; fine aggregates have material predominately passing the No. 4 (4.75 mm) sieve.

An aggregate material stockpile is either a dedicated stockpile or a working (non-dedicated) stockpile. A dedicated stockpile is a stockpile, which has been sampled and tested by the Department representative. Once approved, it shall not be altered unless the additional material has been sampled, tested, and approved. For non-dedicated or working stockpiles, the contractor may add or remove material as needed, provided the quality and gradation is maintained.

1003.01.1 Test Methods: The following test methods apply:

Table 1003-1
Aggregate Test Procedures

Property	Test Procedure
Deleterious Materials	DOTD TR 119
Flat and Elongated Particles	ASTM D4791
Magnesium Sulfate Soundness	AASHTO T 104
Los Angeles Abrasion	AASHTO T 96
Alkali-Silica Reactivity (Chemical Method)	ASTM C289
Alkali Reactivity (Mortar-Bar Method)	ASTM C1260
Reactivity of Concrete Aggregates	AASHTO PP65-11
Alkali Reactivity of Carbonate Rocks (Rock-Cylinder Method)	ASTM C586
Organic Impurities	AASHTO T 21
Unit Weight	AASHTO T 19
Specific Gravity & Absorption of Fine Aggregate	AASHTO T 84
Specific Gravity & Absorption of Coarse Aggregate	AASHTO T 85
Polish Value	AASHTO T 278 and T 279
Amount of Material Finer than the No 200 (75 µm) Sieve	DOTD TR 112
Sieve Analysis (Gradation)	DOTD TR 113
pH of Soil and Water	DOTD TR 430
pH of Aggregates	DOTD TR 122
Atterberg Limits (LL, PL, & PI)	DOTD TR 428
Organic Content	DOTD TR 413
Percent Crushed	DOTD TR 306
Mechanical Analysis of Extracted Aggregate	DOTD TR 309
Sand Equivalent	DOTD TR 120
Fine Aggregate Angularity	DOTD TR 121
Micro-Deval	AASHTO T 327
Moisture Sensitivity (TSR)	DOTD TR 322
Mortar Strength	AASHTO T 71
Methylene Blue	AASHTO TP 57-99

1003.01.2 General Material Properties: All aggregates shall comply with these material properties.

1003.01.2.1 Deleterious Materials: Conform to the following deleterious materials table for source approval and/or project acceptance:

Table 1003-2
Deleterious Materials in Aggregates

Property	Percent, Max
Wood	0.05
Clay Lumps	0.5
Clay Lumps and Friable Particles	3.0
Coal and Lignite	1.0[1]
Flat and Elongated Particles (5:1)	15.0[2]
Flat and Elongated Particles (3:1)	25.0[3]
Glassy Particles	10.0
Iron Ore	2.0[1]
Total: Wood, Clay Lumps, Friable Particles, Iron Ore, Lignite and Other Foreign Matter	5.0

[1] For bridge railing aggregate, maximum is 0.00.
[2] For source approval, maximum is 15.0. For Superpave asphalt aggregates and asphalt surface treatment, maximum is 10.0. For stone matrix asphalt (SMA) aggregates, maximum is 5.0.
[3] Applies only to thin lift asphalt coarse mix, thin lift asphalt Open Graded Friction Course (OGFC) and SMA.

1003.01.2.2. Magnesium Sulfate Soundness: For source approval coarse natural aggregates and recycled portland cement concrete (RPCC), the maximum soundness loss is 15 percent when subjected to 5 cycles of the magnesium sulfate soundness test.

1003.01.2.3. Los Angeles Abrasion. For coarse natural aggregates and RPCC source approval, maximum Los Angeles abrasion loss is 40.0 percent.

1003.01.2.4. Friction Rating. A friction rating is assigned for coarse aggregate (stone and lightweight aggregate) during source approval in accordance with Table 1003-3. The assigned friction rating is available from the Materials and Testing Section. Coarse gravel will only be evaluated for friction rating if the percent double face crushed is at least 75 percent; otherwise, it is assigned a rating of III.

Table 1003-3
Aggregate Friction Rating

Friction Rating[1]	Polish Value
I	> 37
II	35 to 37
III	30 to 34
IV	< 30

[1]The Materials Engineer Administrator may adjust friction rating based upon pavement friction test results.

1003.01.3 Recycled, Reclaimed and Synthetic Aggregates:

1003.01.3.1 Recycled Portland Cement Concrete, (RPCC): RPCC shall be from an approved source listed in the SiteManager® Producer/Supplier List. RPCC shall be crushed portland cement concrete screened and/or graded to meet the requirements of the specification for the intended use. For source approval, the raw material feedstock, the crushing operation, the quality control program, and the stockpiles will be inspected and approved by the District Laboratory Engineer. Quality must be maintained in order to retain source approval status. RPCC used for Interstate projects shall be stored in dedicated stockpiles used solely for one specific project. The RPCC for non-Interstate projects shall be stored in working stockpiles that are separate, identifiable, and have a minimum quantity of 5000 cubic yards. Stockpiles shall be reasonably free of asphalt concrete overlay material, reinforcing steel, joint material, base course material and other debris. If the Project Engineer certifies that the stockpile contains RPCC exclusively from DOTD pavements or structures, the Magnesium Sulfate soundness testing may be waived by the Materials Engineer Administrator.

1003.01.3.2 Reclaimed Asphalt Pavement, (RAP): RAP shall be from an approved source listed in the SiteManager® Producer/Supplier List. Mill or crush RAP in accordance with Section 509 and store in working stockpiles. Stockpiled materials shall be uniform and reasonably free of lightweight aggregate, debris, soil, and other foreign matter.

1003.01.3.3 Blended Calcium Sulfate, (BCS): BCS, a synthetic aggregate, shall be from an approved source listed in the SiteManager® Producer/Supplier List. The quality control program shall be approved by the Materials and Testing Section. The source shall provide documentation as evidence that the Department of Environmental Quality has given environmental clearance specifically for the intended use. Material pH shall

be a minimum of 5.0 when tested in accordance with DOTD TR 122. BCS may be blended at the source with an approved limestone or lime to meet pH requirements. The blended material shall be non-plastic and reasonably free from organic and foreign matter. Samples shall be taken from a dedicated stockpile at the point of origin and tested for gradation in accordance with DOTD TR 113.

1003.01.4 Properties for Portland Cement Concrete Aggregates: For source approval, aggregates will be evaluated for both alkali silica and alkali carbonate reactivity.

1003.01.4.1 Alkali Silica Reactivity (ASR) of Sands and Gravels in Portland Cement Concrete: For source approval, aggregates for use in portland cement concrete are tested for alkali silica reactivity properties in accordance with ASTM C289. Aggregates categorized as "innocuous" (non-reactive) are allowed without restriction. Aggregates categorized as "potentially deleterious" or "deleterious" by ASTM C289 may be further appraised by ASTM C1260 testing, modified to use a minimum 0.53 water cement ratio and a portland cement from the Department's Approved Materials List. If ASTM C1260 then designates aggregates as "potentially deleterious," (less than 0.2 percent expansion) then use the maximum cementitious material substitutions as allowed in Section 901 for mixes incorporating these "potentially deleterious" aggregates. If a fly ash binary mix is selected, the fly ash must be class F. Alternatively, AASHTO PP65-11 may be applied to define ASR potential for gravel and sand for concrete mixtures. Concrete mixtures shall refrain from incorporating aggregates designated as "ASR deleterious."

1003.01.4.2 Alkali Carbonate Reactivity (ACR) and Alkali Silica Reactivity (ASR) of Limestone in Portland Cement Concrete: For source approval, limestone aggregates for use in portland cement concrete will be evaluated for alkali carbonate reactivity (ACR) and alkali silica reactivity (ASR) utilizing AASHTO PP65-11. Aggregates determined to be innocuous (non-reactive) are allowed without restriction. For those aggregates determined to be potentially "ASR reactive," use the maximum cementitious material substitutions as allowed in Section 901 for mixes incorporating these ASR reactive aggregates. If a fly ash binary mix is selected, the fly ash must be class F. Concrete mixtures shall refrain from incorporating limestone aggregates designated as "ASR deleterious." Concrete mixtures shall not incorporate aggregates designated as "ACR reactive."

1003.01.4.3 Organic Impurities in Fine Aggregate for Portland Cement Concrete: For source approval, fine aggregate for portland cement concrete is tested for organic impurities in accordance with AASHTO T 21. If the color is darker than the Organic Color No. 3 when tested, the fine aggregate is then tested in accordance with AASHTO T 71 for mortar strength. The measured compressive mortar strength shall be at least 95 percent of the referenced compressive mortar strength.

1003.02 NONPLASTIC EMBANKMENT. The maximum organic content is 4.0 percent when tested in accordance with DOTD TR 413.

1003.02.1 Sand: Sand embankment shall be nonplastic material with at least 75 percent passing the No. 4 (4.75 mm) sieve and not more than 15 percent passing the No. 200 (75 μm) sieve when tested in accordance with DOTD TR 112 and DOTD TR 113.

1003.02.2 Stone: Stone shall be a coarse stone from the Approved Materials List. Comply with the following gradation:

Table 1003-4
Gradation for Nonplastic Embankment, Stone

U.S. (Metric) Sieve Size	Percent Passing By Weight (Mass)
2 inches (50 mm)	100
1 inch (25.0 mm)	55 - 100
3/4 inch (19.0 mm)	35 - 88
No. 4 (4.75 mm)	0 - 10

The maximum dry-rodded unit weight (mass) is 95 pounds per cubic foot (1520 kg/cu m) when tested in accordance with AASHTO T 19.

1003.02.3 Blended Calcium Sulfate, (BCS): Comply with the following gradation:

Table 1003-5
Gradation for Nonplastic Embankment, BCS

U.S. (Metric) Sieve Size	Percent Passing By Weight (Mass)
1 1/2 inches (50 mm)	60 - 100
1 inch (25.0 mm)	40 - 80
3/4 inch (19.0 mm)	30 - 70
No. 4 (4.75 mm)	20 - 65
No. 200 (75 μm)	0 - 25

1003.03 BASE COURSE AGGREGATES.

1003.03.1 Stone: Use stone from the Approved Materials List, and comply with the following gradation:

Table 1003-6
Gradation for Base Course Aggregates, Stone

U.S. (Metric) Sieve Size	Percent Passing By Weight (Mass)
1 ½ inches (37.5 mm)	100
1 inch (25 mm)	90 - 100
3/4 inch (19.0 mm)	70 - 100
No. 4 (4.75 mm)	35 - 65
No. 40 (425 µm)	12 - 32
No. 200 (75 µm)	5 - 12

For material passing the No. 40 (425 µm) sieve, comply with the following requirements:

Liquid Limit (Max.)	25
Plasticity Index (Max.)	5

1003.03.2 Recycled Portland Cement Concrete: Comply with the following gradation:

Table 1003-7
Gradation for Base Course Aggregates, RPCC

U.S. (Metric) Sieve Size	Percent Passing By Weight (Mass)
1 ½ inches (37.5 mm)	100
1 inch (25.0 mm)	90 - 100
3/4 inch (19.0 mm)	70 - 100
No. 4 (4.75 mm)	35 - 65
No. 40 (425 µm)	12 - 32
No. 200 (75 µm)	0 - 8

Material passing the No. 40 (425 µm) sieve shall be non-plastic.

1003.03.3 Blended Calcium Sulfate, BCS: Comply with the following gradation:

Table 1003-8
Gradation for Base Course Aggregates, BCS

U.S. (Metric) Sieve Size	Percent Passing By Weight (Mass)
2 inches (50 mm))	100
1 ½ inches (37.5 mm)	85 - 100
1 inch (25.0 mm)	80 - 100
3/4 inch (19.0 mm)	60 - 100
No. 4 (4.75 mm)	10 - 40
N0. 40 (425 µm)	0 - 20
No. 200 (75 µm)	0 - 15

1003.03.4 Permeable Base: For permeable asphalt base and permeable concrete base, use 100 percent crushed stone from the Approved Materials List, and comply with the following:

Table 1003-9
Gradation for Permeable Base Aggregates (Stone)

U.S. (Metric) Sieve Size	Percent Passing By Weight (Mass)
1 inch (25 mm)	100
3/4 inch (19.0 mm)	90 - 100
3/8 inch (9.5 mm)	20 - 55
No. 4 (4.75)	0 - 10
No. 8 (2.36)	0 - 5

1003.04 AGGREGATE FOR SUBGRADE LAYER.

1003.04.1 Stone or Recycled Portland Cement Concrete: For stone or recycled portland cement concrete comply with 1003.03.

1003.04.2 Blended Calcium Sulfate: Comply with the following gradation:

Table 1003-10
Gradation for Subgrade Layer, BCS

U.S. (Metric) Sieve Size	Percent Passing By Weight (Mass)
1 inch (25.0 mm)	90 - 100
3/4 inch (19.0 mm)	70 - 100
No. 4 (4.75 mm)	25 - 75
No. 200 (75 μm)	0 - 25

1003.05 AGGREGATES FOR SURFACE COURSE.

1003.05.1 Stone, Recycled Portland Cement Concrete: For stone and/or recycled portland cement concrete, comply with the following:

Table 1003-11
Gradation for Surface Course Aggregates, Stone/RPCC

U.S. (Metric) Sieve Size	Percent Passing By Weight (Mass)
1 ½ inches (37.5 mm)	100
3/4 inch (19.0 mm)	50 - 100
No. 4 (4.75 mm)	35 - 65
No. 40 (425 μm)	10 - 32
No. 200 (75 μm)	3 - 15

For material passing the No. 40 (425 μm) sieve, comply with the following requirements:

Liquid Limit (Max.)	25
Plasticity Index (Max.)	5

1003.05.2 Sand-Clay-Gravel: This material shall be a mixture of sand, clay, and either siliceous gravel, stone, or recycled portland cement concrete. The mixture shall be reasonably free from foreign matter as determined by visual inspection.

The mixture, prior to treatment shall comply with the following:

Table 1003-12
Gradation for Surface Course Aggregates, Sand-Clay-Gravel

U.S. (Metric) Sieve Size	Percent Passing By Weight (Mass)
1 ½ inches (37.5 mm)	95 - 100
No. 4 (4.75 mm)	40 - 65
No. 200 (75 µm)	10 - 25

For material passing the No. 40 (425 µm) sieve, comply with the following after lime treatment:

Liquid Limit (Max.)	40
Plasticity Index	4-15

1003.05.3 Reclaimed Asphalt Pavement (RAP): Comply with the following:

Table 1003-13
Gradation for Surface Course Aggregates, RAP

U.S. (Metric) Sieve Size	Percent Passing By Weight (Mass)
2 inches (50 mm)	100
No. 4 (4.75)	35 - 75

1003.06 AGGREGATES FOR ASPHALT MIXTURES.

Use only stone, gravel, slag, lightweight aggregates, and coarse and manufactured sand sources from the Approved Materials List. RAP and fine natural sand are required to be from an approved Producer/Supplier. All coarse aggregates for Stone Matrix Asphalt (SMA) shall be clean and durable crushed stone. Fine aggregate for SMA shall be 100 percent crushed stone manufactured sand.

Coarse aggregate is all material retained on or above the No. 4 (4.75 mm) sieve. Fine aggregate is all material passing the No. 4 (4.75 mm) sieve.

Comply with 1003.01.

1003.06.1 Coarse: For coarse aggregate stockpiles, determine Coarse Aggregate Angularity in accordance with DOTD TR 306 (Double Face), and determine Flat and Elongated in accordance with ASTM D4791.

1003.06.2 Fine: For fine aggregate stockpiles, determine Fine Aggregate Angularity in accordance with DOTD TR 121, and Sand Equivalent (SE) in accordance with DOTD TR 120. SE is not required for

manufactured sands (screenings), nor for fine aggregate stockpiles having 25 percent or more passing the No. 200 (75 µm) sieve.

1003.06.3 Natural Sand: Natural sand is non-plastic material consisting of clean, hard, durable, siliceous grains graded from coarse to fine and reasonably free from vegetative matter, clay balls, clay lumps, or other deleterious materials. Comply with Tables 1003-1 and 1003-2. The gradation shall have a maximum of 25 percent passing the No. 200 (75 µm) sieve. Clay lumps shall not exceed 0.5 percent by weight (mass) when sampled from the stockpile and tested in accordance with DOTD TR 119.

1003.06.4 Manufactured Sand: Manufactured sand (screenings) is the fine aggregate material generated during the crushing and processing of coarse aggregates. Sand Equivalent testing is not required; fine aggregate angularity testing is required.

1003.06.5 RAP: RAP shall be approved either at the time of removal from the roadway or in stockpiles. Make all stockpile quality control records available at the Project Engineer's request. The records shall include RAP quantities and delivery date, quantities delivered to projects, daily moisture contents, weekly asphalt cement content, and weekly RAP G_{se}. Before feeding RAP into the plant, crush or screen all pieces that are larger than 2 inches (50 mm).

1003.06.6 Mineral Filler: Mineral filler shall be from the Approved Materials List, and shall consist of limestone dust, pulverized hydrated lime, portland cement, cement stack dust, or lime kiln dust. Mineral dust collected in bag houses or by other dust collectors at asphalt concrete plants is not classified as mineral filler. Cement stack dust shall consist of material collected from waste rotary kiln gases discharged through a collector of a cement plant. Comply with the following:

Table 1003-14
Gradation for Asphalt Aggregates, Mineral Filler

U. S. (Metric) Sieve Size	Percent Passing By Weight (Mass)
No. 30 (600 mm)	100
No. 80 (180 mm)	95 - 100
No. 200 (75 µm)	70 - 100
No. 270 (53 µm)	60 - 100

1003.06.7 Lightweight Aggregate: Lightweight aggregate shall consist of cubical fragments which are of uniform density and are free from an excess of foreign matter.

1003.07 AGGREGATES FOR ASPHALT SURFACE TREATMENT. Use crushed gravel, crushed stone, or lightweight aggregate from the Approved Materials List and comply with 1003.01.

Crushed gravel Size 1 and Size 2 shall have 60 percent minimum crushed retained on the No. 4 (4.75 mm) sieve. Crushed gravel Size 3 shall have 75 percent crushed retained on the No. 4 (4.75 mm) sieve. Determine the percent crushed in accordance with DOTD TR 306.

Comply with the following gradation:

Table 1003-15
Gradation for Asphalt Surface Treatment

		Size 1		Size 1A	Size 2	Size 3
U. S. Sieve	Metric Sieve	Slag or Stone Aggregate (Size No. 5)	Crushed Gravel[1] or Lightweight Aggregate	Slag or Stone Aggregate	All Aggregate	All Aggregate
1 1/2 inch	37.5 mm	100	100	100	—	—
1 inch	25.0 mm	90-100	95-100	100	—	—
3/4 inch	19.0 mm	20-55	60-90	85-100	100	—
1/2 inch	12.5 mm	0-10	—	25-40	95-100	100
3/8 inch	9.5 mm	0-5	0-15	5-15	60- 80	95-100
No. 4	4.75 mm	—	0-5	—	0-5	20-50
No. 8	2.36 mm	—	—	—	0-2	0-2
No. 200[2]	75 µm[2]	0-1	0-1	0-1	—	—

[1] Uncrushed gravel may be used for Size 1 aggregate if more than one application of Asphalt Surface Treatment is required.
[2] If the material passing the No. 200 (75 µm) sieve consists of only dust from crushing and handling, and is essentially free of clay, then the percentage passing the No. 200 (75 µm) sieve shall be 0 - 2 percent.

1003.08 AGGREGATES FOR PORTLAND CEMENT CONCRETE AND MORTAR. Use aggregates from the Approved Materials List in portland cement concrete and mortar.

1003.08.1 Fine Aggregate: Sand shall be natural silica sand.

For fine aggregate used in all portland cement concrete except Types B and D gradations, conform to the following gradation:

Table 1003-16
Gradation for Portland Cement Concrete Sand

U.S. (Metric) Sieve Size	Percent Passing By Weight (Mass)
3/8 inch (9.5 mm)	100
No. 4 (4.75 mm)	95 - 100
No. 16 (1.18 mm)	45 - 90
No. 50 (300 μm)	7 - 30
No. 100 (150 μm)	0 - 7
No. 200 (75 μm)	0 - 3

Table 1003-17
Gradation for Mortar Sand

U.S. (Metric) Sieve Size	Percent Passing By Weight (Mass)
No. 4 (4.75 mm)	100
No. 8 (2.36 mm)	95 - 100
No. 100 (150 μm)	0 - 25
No. 200 (75 μm)	0 - 10

1003.08.2 Coarse Aggregate:

For bridge decks, use coarse aggregates with a Friction Rating of I, II, or III as defined in 1003.01.2.4.

1003.08.2.1 Uncrushed Coarse Aggregate:

For uncrushed coarse aggregate used in all portland cement concrete except Types B and D gradations, comply with Table 1003- 18.

Table 1003-18
Gradation for Portland Cement Concrete, Uncrushed Aggregates

Percent Passing				
US Sieve	Metric Sieve	Size 57M	Size 89M	Size 67
2 1/2 inch	63 mm	—	—	—
2 inch	50 mm	—	—	—
1 1/2 inch	37.5 mm	100	—	—
1 inch	25.0 mm	90-100[1]	—	100
3/4 inch	19.0 mm	—	100	90-100
1/2 inch	12.5 mm	25-60	90-100	—
3/8 inch	9.5 mm	—	—	20-55
No.4	4.75 mm	0-10	15-60	0-10
No.8	2.36 mm	0-5	0-30[2]	0-5
No. 16	1.18 mm	—	0-5	—
No. 200	75 µm	0-1	0-1	0-1

[1] ASTM C33 No. 57 designation requires 95 – 100.
[2] ASTM C33 No. 89 designation requires 0 – 15.

1003.08.2.2 Crushed Coarse Aggregate: For crushed coarse aggregate used in all portland cement concrete, except Types B and D gradations, comply with the uncrushed coarse aggregate gradation of 1003.08.2.1, except that when the material finer than the No. 200 (75 µm) sieve consists of the dust fraction from crushing, essentially free of clay, this percentage shall be 0-2 percent. When the total material passing the No. 200 (75 µm) sieve from the coarse and fine aggregates does not exceed 5 percent, the percent passing the No. 200 (75 µm) sieve from the crushed coarse aggregate may be increased to 3 percent.

1003.08.3 Portland Cement Concrete Aggregates - Combined Gradations: For the combined aggregates for the proposed portland cement concrete combined gradation mix, the percent retained based on the dry weight (mass) of the total aggregates shall meet the requirements of Table 1003-19 for the type of concrete specified in Table 901-3.

Table 1003-19
Combined Gradations for Portland Cement Concrete Aggregates

U.S. Sieve	Metric Sieve	Percent Retained of Total Combined Aggregates	
		Gradation Type	
		Type B	Type D
2 1/2 inch	63 mm	0	0
2 inch	50 mm	0	0-20
1 1/2 inch	37.5 mm	0-20	0-20
1 inch	25.0 mm	0-20	5-20
3/4 inch	19.0 mm	5-20	5-20
1/2 inch	12.5 mm	5-20	5-20
3/8 inch	9.5 mm	5-20	5-20
No. 4	4.75 mm	5-20	5-20
No. 8	2.36 mm	5-20	5-20
No. 16	1.18 mm	5-20	5-20
No. 30	600 µm	5-20	5-20
No. 50	300 µm	0-20	0-20
No. 100	150 µm	0-20	0-20
No. 200	75 µm	0-5	0-5
Note: For the sieves in the shaded areas, the sum of any two adjacent sieves shall be a minimum of 12 percent of the total combined aggregates.			

Sample and test each type of aggregate stockpile to be used in the proposed mixture individually. Mathematically determine the percent of total combined aggregates retained using the proportions of the combined aggregate blend. Base all gradation calculations on percent of dry weight (mass).

1003.09 GRANULAR MATERIAL. Granular material shall be non-plastic siliceous material complying with 1003.01 and the following gradation:

Table 1003-20
Gradation for Granular Material

U.S. (Metric) Sieve Size	Percent Passing By Weight (Mass)
1/2 inch (12.5 mm)	100
No. 10 (2.00 mm)	75 - 100
No. 200 (75 µm)	0 - 10

1003.10 BEDDING MATERIAL. Bedding materials shall consist of stone, recycled portland cement concrete, or a mixture of either recycled portland cement concrete, gravel, crushed slag, or stone combined with granular material. Stone shall be from the Approved Materials List.

1003.10.1 Stone or Recycled Portland Cement Concrete:

Comply with 1003.03.

1003.10.2 Sand-Aggregate:

The sand-aggregate material shall be a natural or artificial mixture of sand and gravel, recycled portland cement concrete, or other approved aggregate listed in this subsection. Material passing the No. 40 (425 µm) sieve shall be non-plastic. The mixture shall be free of foreign matter as determined by visual inspection. Comply with the following gradation prior to placement.

Table 1003-21
Gradation for Bedding, Sand-Aggregate

U.S. (Metric) Sieve Size	Percent Passing By Weight (Mass)
1 ½ inches (37.5 mm)	90 - 100
3/4 inch (19.0 mm)	70 - 85
3/8 inch (9.5 mm)	40 - 60
No. 4 (4.75 mm)	15 - 40
No. 16 (1.19 mm)	3 - 15
No. 200 (75 µm)	0 - 5

1003.10.3 Mixtures: Mix recycled portland cement concrete, gravel, or stone with 35±5 percent granular material by volume. Verify the mixture quantities by proof of material deliveries.

1003.10.3.1 Gravel: Comply with the following gradation.

Table 1003-22
Gradation for Bedding, Gravel

U.S. (Metric) Sieve Size	Percent Passing By Weight (Mass)
1 ½ inches (37.5 mm)	95 - 100
No. 4 (4.75 mm)	0 - 15
No. 200 (75 µm)	0 - 2

1003.10.3.2 Recycled Portland Cement Concrete or Stone: Comply with the following gradation:

Table 1003-23
Gradation for Bedding, (RPCC or Stone)

U.S. (Metric) Sieve Size	Percent Passing By Weight (Mass)
1 ½ inches (37.5 mm)	95 - 100
3/4 inch (19.0 mm)	40 - 85
No. 4 (4.75 mm)	0 - 15

1003.10.3.3 Granular Material: Comply with 1003.09.

1003.11 BACKFILL. Stone shall comply with 1003.03.1. Recycled portland cement concrete, RPCC, shall comply with 1003.03.2. Reclaimed asphalt pavement, RAP, shall comply with 1003.05.3. For source approval, comply with 1003.01.

Section 1004
Landscaping Materials

1004.01 FERTILIZER. Fertilizer shall be a commercial type complying with the commercial fertilizer laws in effect as regulated by the Louisiana Department of Agriculture and Forestry. The chemical composition shall be as specified and shall be designated by a 3-number sequence representing minimum percentages by weight, respectively, of nitrogen (N), available phosphoric acid (P_2O_5) and soluble potash (K_2O).

Fertilizer supplied in granular, pellet, or tablet form shall be packaged in moisture proof containers.

Fertilizer tablets shall be an approved brand containing nitrogen fixing and phosphorus solubilizing bacteria, slow-release nitrogen, natural organic nutrients, and humic acid. For backfill mix, fertilizer tablets shall be controlled release tablets, 21 gram, 20-10-5 (N-P-K) with calcium, sulfur and iron.

1004.02 AGRICULTURAL LIME. Agricultural lime shall consist of ground limestone or seashells containing at least 90 percent calcium carbonate equivalent ($CaCO_3$) when tested in accordance with ASTM C602. The material shall be ground so that a minimum of 90 percent passes a No. 10 sieve and 25 percent passes a No. 100 sieve.

1004.03 SEED. Seed shall comply with requirements of Louisiana law. The minimum percentage of pure live seed and the maximum percentage of weed seed permitted shall be in accordance with Table 1004-1.

Table 1004-1
Seed Requirements

Variety	Minimum Percent of Pure Live Seed (Purity Times Germination Including Hard Seed by Count)	Maximum Percent of Weed Seed, by Count
Hulled Bermuda	83	1
Pensacola Bahia	81	2
Crimson Clover	78	1
Kentucky 31 Fescue	80	1
Unhulled Bermuda	80	1
Ball Clover	80	1
Vetch (Common)	80	1
Annual Rye	80	1
Browntop Millet	80	1

Each variety of seed shall be furnished and delivered in separate bags or other containers. Each bag or container shall bear an analysis tag which is a minimum No. 6 standard shipping tag having all information required by the Louisiana Seed Law, arranged as shown in Table 1004-2.

Table 1004-2
Seed Analysis Tag

Kind & Variety		
Where Grown	Net Wt.	Lot No.
Pure Seed %	Germination %	
Inert Matter %	Hard Seed %	
Crop Seed %	Total Germ. & Hard Seed %	
Weed Seed %	Date of Test	
Name & No. of Noxious Weed Seed per lb (kg).		
Name		
Address		

Seed furnished shall be the previous season's crop (the last crop year for the crop kind in question) and the date of analysis shown on each tag is

within 5 months (excluding the month in which the test is completed) of the time of delivery to the project.

1004.03.1 Noxious Weeds: Noxious weeds shall be interpreted to mean that list of weeds, except Bermuda, which has been adopted by the Louisiana Seed Commission as being noxious in Louisiana. Noxious weed seeds shall not exceed the limitations prescribed in the regulations and in no case shall they exceed 500 seeds per pound.

Analysis tags shall be removed from each bag or container only by the engineer or an authorized representative.

1004.03.2 Test Report: For each lot of seed, submit a copy of the official service laboratory test report as defined by the Louisiana Department of Agriculture and Forestry to the engineer. The DOTD will accept test reports from the Agricultural Departments of other states provided the requirements of these specifications are met. Ensure that the lot number on the analysis tag matches the laboratory test report lot number.

1004.04 MULCH. Mulch shall consist of either tacked vegetative mulch or fiber mulch product complying with the following:

1004.04.1 Tacked Vegetative Mulch: Vegetation for tacked vegetative mulch shall consist of pine straw, stems or stalks of oats, rye, rice,; or other approved straws. Also, hay obtained from various legumes and grasses such as clover, vetches, soybeans, Bermuda, Dallis, carpet sedge, fescue, or other approved legumes or grasses of any combination thereof may be used. Straw or hay shall be reasonably dry and free from mold, Johnson grass or other noxious weeds. The tacking agent for vegetative mulch shall be from the Approved Materials List. For source approval, the minimum allowable vegetative density of tacked vegetative mulch shall be 70 percent for clay soils and 60 percent for sandy soils when evaluated in accordance with the Texas Transportation Institute (TTI) Field Performance Testing Procedure of Selected Erosion Control Products.

1004.04.2 Fiber Mulch Products: Use fiber mulch products from the Approved Materials List that consist of organic fiber mulches. Fiber mulch products may consist of the fiber only, or a prepackaged blend of fiber mulch and tackifier. For fiber mulch products packaged without tackifier, use a tackifier from the Approved Materials List. For source approval, the minimum allowable vegetative density of fiber mulch products shall be 70 percent for clay soils and 60 percent for sandy soils when evaluated in accordance with the Texas Transportation Institute (TTI) Field Performance Testing Procedure of Selected Erosion Control Products.

1004.05 WATER MANAGEMENT GEL. Water management gel shall consist of an acrylamide copolymer gel with the ability to retain and release available water to the root zone. Mix the manufacturer's recommended amount of water management gel with the required amount of backfill soil per plant before backfilling.

1004.06 MYCORRHIZAL INOCULANT. Mycorrhizal inoculant shall consist of live spores and/or root fragments or mycelium of Vesicular-Arbuscular (VA) Endomycorrhizal fungi and Ectomycorrhizal fungus and beneficial bacteria which have been chosen based on their ability to survive and influence plants over a broad pH range. Rhododendrons, Azaleas, and Laurels require ericoid Mycorrhizae. Each Endomycorrhizal Inoculant shall carry a supplier's guarantee of numbers of propagules per unit weight or volume of bulk material. If more than one fungal species is claimed by the supplier, the label shall include a guarantee for each species of Mycorrhizal fungus claimed. The Project Engineer will verify that the expiration date or shelf life of each container has not expired before approving its use.

Section 1005
Joint Materials for Pavements and Structures

1005.01 PREFORMED JOINT FILLERS.

1005.01.1 Resilient Bituminous Types: Comply with AASHTO M 213.

1005.01.2 Wood Fillers: Bottom boards shall be clear heart redwood. Top boards shall be any type of wood which is free from defects and meets dimensional requirements. Occasional medium surface checks will be permitted provided the board is free of defects that will impair its usefulness.

Boards shall not vary from specified dimensions in excess of the following tolerances:

	Tolerance, inches	Tolerance, mm
Thickness	-0, +1/16	-0, +2
Depth	±1/8	±3
Length	±1/4	±6

The load required to compress the material in an oven-dry condition to 50 percent of its original thickness shall not exceed 1750 psi (12 MPa).

1005.01.3 Bituminous Type: Comply with ASTM D994.

1005.01.4 Asphalt Ribbon: Filler shall consist of preformed strips of bitumen and inert filler material conforming to the following requirements:

Thickness, mm 3-5
Depth tolerance, mm ..... ±3
Weight, kg/100 sq m, Min. 245
Tensile Strength, kg/100 mm width, Min. 90
Bitumen, % by wt (ASTM D545), Min. 60

The tensile strength is determined by pulling a 25-by-150-mm sample at a 500-mm/min separation rate.

This material shall be resistant to cracking, tearing, or permanent deformation under normal handling and installation procedures. It shall be sufficiently rigid to enable it to form a straight joint.

Backer material of the appropriate size shall comply with ASTM D5249, Type 3.

1005.01.5 Closed Cell Polyethylene Joint Filler: Comply with ASTM D7174, Type I. This material shall be used with an adhesive-lubricant. Joint fillers and adhesive-lubricants shall be from the Approved Materials List.

1005.01.6 Rubber: Comply with AASHTO M 153, Type IV.

1005.02 POURED AND EXTRUDED JOINT SEALANT. Provide all materials in containers labeled with the name and address of the manufacturer, the trade name of the sealant, classification of the sealant (i.e., non-sag or self-leveling), batch number, manufacture date, and expiration date.

1005.02.1 Hot Poured Rubberized Asphalt Type: Comply with ASTM D6690, Type II. The sealant shall be from the Approved Materials List. Backer materials of the appropriate size shall comply with ASTM D5249, Type I.

1005.02.2 Polyurethane Sealants: The system shall be either a 1- or 2-component, pourable or extrudable sealant, with required primers and backer material. It shall cure to a solid rubber-like material able to withstand both tension and compression. Sealant shall comply with the requirements of Table 1005-1.

The system shall be from the Approved Materials List. A backer material of the appropriate size shall comply with ASTM D5249, Type 2 without the heat resistant requirement or Type 3.

Table 1005-1
Polyurethane Sealants

Property		Test Method	Requirement
Flow @ 60°C, 5 hr., mm, Max		ASTM D5329	3.0
Tack-Free Time, h, Max		ASTM C679	72
Bond, Defects, mm, Max		ASTM D5893	6.0
Resilience, %, Min.		ASTM D5329	75
Ball Penetration		ASTM D5329	5 – 20
Resilience (after heat aging @ 70 +/- 1°C for 24 +/- 2h), %, Min.		ASTM D5329	75
Artificial Weathering		ASTM D5893	Pass
Ozone Resistance (Exposure to 100 pphm ozone for 100 h @ 40°C, sample under 20% strain or bent loop)		ASTM D1149	No Cracks
Weight (mass) Loss, %, Max.		ASTM C792	10
Infrared Charts		DOTD TR610	
	Activator		Pass
	Base		Pass
[1]All specimens shall be cured at standard laboratory conditions for a minimum of 72 hours prior to beginning any test.			

1005.02.3 Silicone Sealant (Single Component): Comply with ASTM D5893. The system shall be from the Approved Materials List.

1005.02.4 Silicone Sealant (Two Component - Rapid Cure): Comply with ASTM D5893 and meet the requirements for single component sealants when mixed and prepared in accordance with the manufacturer's recommendations. The system shall be from the Approved Materials List.

A backer material of the appropriate size shall conform to ASTM D5249, Type 3.

1005.03 PREFORMED ELASTOMERIC COMPRESSION JOINT SEALS.

1005.03.1 Seals: The system shall be from the Approved Materials List. The uncompressed depth of the seal shall be equal to or greater than the uncompressed width of the seal. The actual width of the seal shall not be less than the nominal width of the seal.

The system shall comply with ASTM D2628, except that the ozone resistance may be determined by the bent loop test method.

1005.03.2 Adhesive-Lubricant: The adhesive-lubricant shall comply with ASTM D4070 and shall be from the Approved Materials List.

1005.04 COMBINATION JOINT FORMER/SEALER.

1005.04.1 Description: This joint former/sealer is intended for use in simultaneously forming and sealing a weakened plane in portland cement concrete pavements.

The material shall consist of an elastomeric strip permanently bonded either mechanically or chemically at the top of each of two rigid plastic side frames or mechanically bonded at the top of the two rigid plastic side frames and covered with a removable plastic top cap. The side frames shall be of such configuration that when the sealer is inserted into fresh concrete and vibrated, a permanent bond forms between side frames and concrete.

1005.04.2 Material Requirements:

1005.04.2.1 Elastomer: The elastomer strip portion of the material shall be manufactured from vulcanized elastomeric compound using polymerized chloroprene as the base polymer, and shall comply with the requirements of Table 1005-2.

Table 1005-2
Elastomer for Combination Joint Former / Sealer

Property	ASTM Test Method	Requirements	
		Polymerized Chloroprene	Thermoplastic Vulcanizate
Tensile Strength, kPa, Min.	D 412	12,400	7,400
Elongation at Break, % Min.	D 412	200	400
Hardness, Shore A	D 2240	65 ± 10	65 ± 10
Properties after Aging, 70 h @ 100°C	D 573		
Tensile Strength, % Loss, Max.		20	20
Elongation, % loss, Max.		25	25
Hardness, pts. increase, Max.		10	10
Ozone Resistance, 20% strain or bent loop, 300 pphm in air, 70 h @ 40°C	D 1149	no cracks	no cracks
Oil Swell, IRM 903, 70 h@ 100°C, wt change, % Max.	D 471	45	75

1005.04.2.2 Bond of Elastomer to Plastic: The force required to shear the elastomer from the plastic shall be a minimum of 5.0 pounds per linear inch of sealer when tested in accordance with DOTD TR 636.

1005.04.2.3 Bond of Plastic to Cement Mortar: The force required to separate the cement mortar from the plastic shall be a minimum of 5.0 pounds per linear inch of sealer when tested in accordance with DOTD TR 636.

1005.05 FABRICATED SEALS AND TROUGHS.

1005.05.1 Preformed Neoprene Joint Seal: Provide an extruded neoprene material conforming to ASTM D2628 with the following exceptions:

1. Ozone resistance may be determined by the bent loop method.
2. Omit the recovery and the compression-deflection tests.

1005.05.2 Preformed Silicone Joint Seal: Comply with Tables 1005-3 and 1005-4.

Table 1005-3
Preformed Silicone Joint Seal Properties

Preformed Silicone Seal Property	ASTM Test Method	Value
Durometer (Shore A)	D2240	55 +/- 5
Tensile Strength	D412	1000 psi. minimum
Elongation	D412	400% minimum
Tear Strength (Die B)	D624	100 ppi. minimum
Compression set at 212°F, 70 hrs.	D395	30% maximum
Heat Aged at 212°F, 70 hrs.		
Durometer (Shore A)	D573	5 max. points loss
Tensile Strength	D573	10 max. % loss
Elongation	D573	10 max. % loss
U.V. Radiation Resistance	C793	No cracking, ozone chalking or degradation

The locking adhesive shall be non-sag, high modulus silicone adhesive conforming to the following specifications:

Table 1005-4
Adhesive Properties

Adhesive Property	ASTM Test Method	Value
Durometer (Shore A)	C661	25 +/- 5
Peel Adhesion to Substrates after 7 days water immersion	C794	13 pli.
Tensile Strength	D412	200 psi. minimum
Elongation	D412	450% minimum
Tack Free Time	C679	30 minutes maximum
Cure Time 1/4" Bead (through 1/4" thickness) at 75°F, 50% R.H.	C679	16 hours maximum
U.V. Radiation Resistance	C793	No cracking, ozone chalking or degradation

1005.05.3 Fabricated Troughs and Membranes: Provide troughs and membranes consisting of reinforced elastomeric virgin polychloroprene (neoprene) with excellent environmental resistance to weather, salts, chlorides, oxygen, ozone, ultraviolet radiation, water, and common roadway substances such as gasoline and products of combustion.

Provide troughs and membranes having 1/4 inch minimum thickness. Elastomeric sheets shall be internally reinforced with synthetic or natural fabric. Fabric shall consist of either a single layer of 14.6 ounce woven nylon

fabric, or the equivalent in multiple layers of woven nylon fabric, laminated between two or more layers of neoprene.
Conform to the following:

Table 1005-5
Elastomeric Sheet Properties

Elastomeric Sheet Property	ASTM Test Method	Value
Durometer (Shore A)	D2240	60 +/- 5
Tensile Strength	D412	2000 psi. minimum
Elongation at Break	D412	250% minimum
Heat Aged at 212°F, 70 hrs. Durometer (Shore A) Tensile Strength Elongation at Break	 D573 D573 D573	 +10, -0 point change 20 max. % loss 20 max. % loss
Tear Strength (Die C)	D624	120 ppi. minimum
Oil Swell at 212°F, 70 hrs. using ASTM Oil No. 3 Change in Weight	 D471	 45 maximum % gain
Change in Volume	D471	120 maximum % gain
Change in Tensile Strength	D471	70 maximum % loss
Change in Elongation at Break	D471	55 maximum % loss
Ozone Resistance at 100°F, 100 hrs., 100 PPHM Ozone, under 20% strain	D1149	No cracks when tested with Method "B"
Breaking Strength of Finished Fabric: Take sample transverse to trough centerline, or random sample from curtain.	D5034	700 ppi. minimum

1005.06 JOINT MATERIALS FOR TRANSVERSE EXPANSION JOINT (TYPE EJ-1 1/2 Inches).

1005.06.1 Type EJ-1 1/2 Inches: System shall be an approved product listed on the Approved Materials List and comply with ASTM D7174, Type I.

1005.06.2 Type EJ-4 Inches: System shall comply with ASTM D7174, Type I, with the following exceptions. The material shall be a preformed polyurethane (or other approved equal) foam, and the preformed cross section shall be semi-open cell, homogenous without laminations. The load required to compress test specimens by 25 percent (to 75 percent of original thickness) shall not be less than 3 psi (21 kPa).

Dimensional tolerances shall be:

	Tolerance, inches (mm)	
Thickness:	+/- 5%	(+/- 5%)
Depth:	+/- 0.4	(+/- 10)
Length:	+3.0, -0	(+80, -0)

The cross section shape shall allow easy installation in the pavement joint with parallel sides and shall be sufficiently self-locking to prevent the material from floating out of the joint. The molded polyurethane foam shall be free of defects and internal voids greater than 1/2 inch (13 mm). When the joint filler is used to form the joint, the self-locking feature will not be required and the joint filler will extend full depth.

Use lubricant-adhesive recommended by the joint filler manufacturer and apply according to the manufacturer's directions.

1005.07 WATERSTOPS.

1005.07.1 Copper Waterstops: Comply with ASTM B370, soft temper.

1005.07.2 Polyvinyl Chloride (PVC) Waterstops: Comply with U. S. Army Corps of Engineers' Specification CRD-C 572.

1005.07.3 Rubber Waterstops: Comply with U. S. Army Corps of Engineers' Specification CRD-C 513.

Section 1006
Thermoplastic Pipe

1006.01 GENERAL. Thermoplastic pipe and joint systems for cross drains, storm drains, and side drains shall be from the Approved Materials List. Thermoplastic pipe for underdrains and yard drains shall be perforated or non-perforated, as specified, and shall be from the Approved Materials List. Perforations, if specified, shall comply with AASHTO M 252.

1006.02 Polyvinyl Chloride Pipe (PVCP). PVCP and gasket materials shall comply with AASHTO M 278 or ASTM D3034, SDR 35.

1006.03 Ribbed Polyvinyl Chloride Pipe (RPVCP). RPVCP may be either open profile or dual wall construction in accordance with the specified ASTM standards. Pipe and gasket materials shall comply with ASTM F794 or ASTM F949, Series 46 with UV inhibitors. The resin shall have a minimum cell classification of 12454-C in accordance with ASTM D1784.

1006.04 Corrugated Polyethylene Pipe Single Wall (CPEPSW). CPEPSW shall be perforated and shall comply with AASHTO M 252, Type C. Perforations shall comply with AASHTO M 252. Do not use CPEPSW as shoulder outlet underdrain pipe.

1006.05 Corrugated Polyethelene Pipe Double Wall (CPEPDW).

When used for storm, cross, or side drains, CPEPDW pipe and gasket materials shall comply with AASHTO M 294, Type S, with a minimum resin cell classification of 435400C in accordance with ASTM D3350.

When used for plastic underdrain pipe, the pipe and joint system shall comply with AASHTO M 252.

When used for yard drain pipe, the pipe and joint system shall comply with AASHTO M 252, Type S, with a minimum resin cell classification of 424420C in accordance with ASTM D3350, or AASHTO M 294, Type S, with a minimum resin cell classification of 435400C in accordance with ASTM D3350.

1006.06 Joint Systems for Thermoplastic Pipe. Use pipe and joint systems from the Approved Materials List. Joint systems shall comply with 1018.03. A Type 2 or 3 joint system may be substituted for a Type 1 joint system; a Type 3 joint system may be substituted for a Type 2 joint system.

When using split coupling bands, use one piece that is composed of the same material as the pipe. The bands shall be the same thickness as the base pipe. The width of the band shall be equal to one-half the diameter of the pipe but a minimum of 12 inches wide.

Section 1007
Metal Pipe

1007.01 CORRUGATED STEEL PIPE AND PIPE ARCH. Metal pipe shall be qualified products as determined by the Construction Fabrication Unit. Comply with the requirements of Type I (culvert pipes, circular section) and Type II (culvert pipes, other than circular section) of AASHTO M 36 amended as follows:

1. Pipe and pipe arch shall be galvanized in accordance with AASHTO M 218.
2. Elbows, tees, and other in-line fittings shall be fabricated from sheets of the same thickness and coating material as the pipe or pipe arch to which they are joined. Flared end sections shall be as specified.
3. Shop-formed elliptical pipe and shop-strutted pipe shall be furnished when specified.
4. For helical pipe, no coil splices at pipe manufacturing plants will be allowed for pipe 30 inches in diameter or less.
5. Helical pipe shall have annular ends and shall have the ends of seams welded a minimum of 2 inches. Helical pipe ends shall be rerolled a minimum of two full standard corrugations to the same corrugation depth as the pipe when used with the appropriate jointing system.
6. Pipe arch dimensions shall comply with AASHTO M 245 and Table 1007-1 of this section.
7. A minimum of two approved lifting lugs shall be provided on pipe larger than 30 inches in diameter, pipe arch larger than 30 inches in equivalent diameter, and any diameter of pipe or pipe arch longer than 30 feet.
8. Damaged metallic coating shall either be recoated or shall be repaired with a cold galvanizing repair compound from the Approved Materials List.

1007.02 BITUMINOUS COATED CORRUGATED STEEL PIPE AND PIPE ARCH. These conduits shall be coated in accordance with AASHTO M 190 amended as follows:

1. AASHTO M 36 is amended in accordance with 1007.01
2. Coating shall be Type A, fully bituminous coated.

1007.03 BITUMINOUS COATED CORRUGATED STEEL UNDERDRAIN PIPE. Pipe and coupling bands shall comply with the requirements of Type III (underdrain pipes) of AASHTO M 36. The pipe shall be coated with a bituminous material in accordance with AASHTO M 190, Type A coating, except the minimum coating thickness shall be 0.03 inch The specified minimum diameter of perforations shall apply after coating. Minimum sheet thickness shall be 0.064 inch (16 gage).

1007.04 STRUCTURAL PLATE FOR PIPE, PIPE ARCH AND ARCH. Comply with AASHTO M 167 for steel, and AASHTO M 219 for aluminum.

1007.05 CORRUGATED ALUMINUM PIPE AND PIPE ARCH. Comply with AASHTO M 196 with the following exceptions:

1. Helical pipe shall have annular ends and shall have the ends of seams welded a minimum of 2 inches. Helical pipe ends shall be rerolled a minimum of two full standard corrugations to the same corrugation depth as the pipe when used with the appropriate jointing system.
2. Pipe arch dimensions shall comply with Table 1007-1.
3. A minimum of two approved lifting lugs shall be provided on pipe larger than 30 inches diameter, pipe arch larger than 30 inches equivalent diameter, and any diameter of pipe or pipe arch longer than 30 feet.
4. Aluminum alloy sheet used in fabricating pipe shall conform to the applicable requirements of AASHTO M 197 for Alclad Alloy 3004-H34 for annular pipe, and Alclad Alloy 3004-H32 for helical pipe.

1007.06 CORRUGATED ALUMINUM UNDERDRAIN PIPE. Pipe and coupling bands shall comply with the requirements of Type III (underdrain pipes) of AASHTO M 196. Minimum sheet thickness shall be 0.060 inch (16 gage).

1007.07 PIPE ARCH DIMENSIONS. Pipe arch dimensions shall comply with Table 1007-1. Pipe arch tolerances shall comply with the plans.

Table 1007-1
Metal Pipe Arch Dimensions (Inches)

	Steel & Aluminum	Steel
Round Equivalent (Inches)	2 2/3 in. by 1/2 in. Corrugation	3 in. by 1 in. or 5 in. by 1 in. Corrugation
15	17 x 13	—
18	21 x 15	—
21	24 x 18	—
24	28 x 20	—
30	35 x 24	—
36	42 x 29	40 x 31
42	49 x 33	46 x 36
48	57 x 38	53 x 41
54	64 x 43	60 x 46
60	71 x 47	66 x 51
66	77 x 52	73 x 55
72	83 x 57	81 x 59
78	—	87 x 63
84	—	95 x 67
90	—	103 x 71
96	—	112 x 75
102	—	117 x 79
108	—	128 x 83
114	—	137 x 87
120	—	142 x 91

1007.08 PIPE JOINT SYSTEMS. Metal pipe joint systems shall comply with 1018.03 and shall be as shown on the plans. A Type 2 or 3 joint system may be substituted for a Type 1 joint system; a Type 3 joint system may be substituted for a Type 2 joint system. For Type 1 joints, provide at least one line of approved gasket material under the band on each pipe end.

1007.08.1 Coupling Bands: Coupling bands for joining metal conduit shall be approved by the DOTD Materials Engineer Administrator and shall comply with AASHTO M 36 for steel conduit and AASHTO M 196 for aluminum conduit with the following modifications:

Bands shall be of an approved design and shall be fabricated from metal sheets of the same material as the conduit. The band thickness shall be the same as the conduit thickness with a maximum of 12 gage. Coating shall be the same as used on the conduit. Minimum band width shall be 12 inches.

1007.08.2 Steel Banding Rods: Comply with AASHTO M 270, Grade 36 (M 270M, Grade 250). Welding of rods will not be permitted. No more than two splices will be allowed.

1007.08.3 Hardware: Hardware shall be galvanized in accordance with ASTM A153 or B633, Class Fe/Zn 25 or an approved mechanical galvanizing process complying with ASTM B695 that provides the same coating thickness.

1007.08.4 Gaskets: Gaskets for pipe joint systems shall be from the Approved Materials List.

1007.08.4.1 Rubber Gaskets: Comply with ASTM C443. Each rubber gasket shall be identified with a batch or lot number. Gasket cross section shall be the following:

For pipe 36 inches in diameter or less, gasket cross section shall be 13/16-inch.

For pipe greater than 36 inches in diameter, with 1/2-inch deep corrugations, gasket cross section shall be 7/8-inch.

For pipe greater than 36 inches in diameter with 1-inch deep corrugations, gasket cross section shall be 1 3/8-inches.

1007.08.4.2 Preformed Flexible Gaskets: Comply with ASTM C990. Gasket material shall be a minimum of 1 inch for 1/2-inch corrugation depth, and a minimum of 1 1/2 inches for 1-inch corrugation depth.

1007.09 CAST IRON SOIL PIPE AND FITTINGS. Comply with ASTM A74. Joints shall be made with rubber gaskets complying with ASTM C564.

1007.10 DUCTILE IRON PIPE. Comply with ANSI A 21.51.

1007.11 BLACK AND GALVANIZED WELDED AND SEAMLESS STEEL PIPE. Steel pipe for ordinary uses shall comply with ASTM A53.

Section 1008
Paints

1008.01 GENERAL. Paints shall be delivered in clean, unopened shipping containers complying with Surface Transportation Board (STB) requirements.

Each paint container shall bear a label containing the following information: name and address of manufacturer, trade name or trademark, kind of paint, color of paint, number of gallons (L), batch number, and date of production.

The material shall not show skinning, settling, color change, thickening, or livering that cannot be eliminated by normal mixing procedures. Store, mix, and apply according to manufacturer's recommendations. Discard paint after the manufacturer's recommended shelf life has expired. DOTD's test results are valid for 12 months.

1008.02 ZINC PAINT SYSTEMS. The zinc paint system shall be from the Approved Materials List. Each system will be tested in accordance with AASHTO R 31. Zinc paint systems shall conform to the specification requirements of AASHTO R 31. All zinc paint systems shall meet the performance requirements listed in the latest Northeast Protective Coating Committee (NEPCOAT) Acceptance Criteria for New and 100 percent Bare Existing Steel for Bridges. The latest acceptance criteria can be found on the NEPCOAT website at www.nepcoat.org under the Qualified Products for Protective Coatings for New and 100 percent Bare Existing Steel for Bridges document.

Paint used on projects will be sampled and tested and shall comply with the following requirements:

Table 1008-1
Zinc Paint System Properties

Property	Test Method	Tolerance[1]
Pigment Content.	ASTM D2698	±2.0%
Density	ASTM D1475	±0.25 lbs/gal (±0.03 kg/l)
Solids Content	ASTM D2369	±2.0%
Non-volatile in Vehicle Content	ASTM D2698	±2.0%
Viscosity, Ku	ASTM D562	±5KU
Dry to Touch	ASTM D1640	±10%
Dry Through	ASTM D1640	±10%
Sag, Lenetta	ASTM D4400	±10%
Infrared Spectrum	DOTD TR 610	Match Original[2]

[1]Target Values shall be established by the Materials and Testing Section upon qualification of the paint system.
[2]Standards for infrared spectrum shall be kept on file and compared to project samples for acceptance purposes.

The topcoat shall be tinted to match federal color # 36463 from Federal Standard 595C for non-weathering steel and tinted to match federal color # 30045 from Federal Standard 595C for weathering steel, unless otherwise specified.

1008.03 ASPHALTIC VARNISH.

1008.03.1 Material: Asphaltic varnish shall be composed of hard native asphalts or asphaltites (gilsonite, for example), run (fluxed) and blended with properly treated drying oils, and thinned with suitable solvents with the necessary amount of dryers.

1008.03.2 Appearance: The film sample will be poured on a clean, clear glass plate, and then placed in a vertical position until the excess varnish drains off. The sample is then examined by transmitted light. A smooth and homogeneous sample is acceptable.

1008.03.3 Color: Color shall be jet black when examined by reflected light.

1008.03.4 Solids Content: Solids content shall not be less than 40 percent by weight (mass) when tested in accordance with ASTM D2369.

1008.03.5 Drying of Film:

1008.03.5.1 Set to Touch: Film shall set to touch in not more than 8 hours when tested in accordance with ASTM D1640.

1008.03.5.2 Dry Through: Film shall dry through in not more than 36 hours when tested in accordance with ASTM D1640.

1008.03.6 Working Properties and Appearance of Dried Film: Varnish shall have good brushing, flowing, covering, and leveling properties. Dried film shall be jet black, smooth, and free from brush marks, blisters, pinholes, and other defects.

1008.03.7 Water Resistance: Film shall show no whitening, dulling, or other defects after a dried film is immersed in water for 18 hours and air dried for 2 hours.

1008.04 COAL TAR EPOXY-POLYAMIDE PAINT. Comply with SSPC-Paint 16.

1008.05 COLD GALVANIZED REPAIR COMPOUND. Use a product from the Approved Materials List. The material shall be supplied from the manufacturer in unopened aerosol cans or unopened friction top cans. The cans shall be labeled with the manufacturer's name, product name, batch number, and expiration date. The pigment shall contain a minimum of 90 percent metallic zinc. Dried film shall be relatively smooth, and free from blisters, pinholes, sags, and other defects. A minimal amount of brush marks is acceptable.

Test panels coated with the compound will be tested in a salt fog apparatus in accordance with ASTM B117 for 1500 hours. The panels shall show no signs of rusting, blistering, undercutting, delamination, or other deleterious conditions.

1008.06 CORROSION INHIBITING ALKYD PAINT SYSTEM. Use a three-coat paint system which is compatible with basic lead silico chromate paint. The corrosion inhibiting pigment shall be calcium borosilicate. The primer and the intermediate coats shall be tinted for color contrast. Use aluminum topcoat in accordance with SSPC-Paint 101, Type I for both systems.

1008.06.1 Specific Requirements: Comply with the following:

Table 1008-2
Corrosion Inhibiting Alkyd Paint System Properties, Primer

Property	Test Method	Min	Max
Pigment, % by wt	ASTM D2371	53	—
Vehicle, % by wt	ASTM D2372	—	47
Density, lbs/gal	ASTM D1475	11.4	—
Water, %		—	0.25
Coarse Particle and Skins (Total Residue Retained on No. 325 Sieve Based on Paint), %	ASTM D185	—	1.0
Fineness of Grind (North Std)	ASTM D1210	5	—
Viscosity (Stormer-Krebs Units) @ 77°F	ASTM D562	75	85
Dry Through, Hours	ASTM D1640	—	18
Non-volatile in Vehicle, % by wt	ASTM D2369 & ASTM D2372	57	—

Table 1008-3
Corrosion Inhibiting Alkyd Paint System Properties, Intermediate Coat

Property	Test Method	Min	Max
Pigment, % by wt	ASTM D2371	44	—
Vehicle, % by wt	ASTM D2372	—	56
Density, lbs/gal	ASTM D1475	10.2	—
Water, %		—	0.25
Coarse Particle and Skins (Total Residue Retained on No. 325 Sieve Based on Paint), %	ASTM D185	—	1.0
Fineness of Grind (North Std)	ASTM D1210	5	—
Viscosity (Stormer-Krebs Units) @ 77°F	ASTM D562	75	85
Dry Through, Hours	ASTM D1640	—	-10
Non-volatile in Vehicle, % by wt	ASTM D2369 & ASTM D2372	45	—

Table 1008-4
Corrosion Inhibiting Alkyd Paint System Chemical Requirements, Prime

Pigment	Test Method	Min	Max
Calcium Boro-Silicate	ASTM D4288	80.0%	—
Synthetic Iron Oxide, Class I	ASTM D84	16.0%	18.0%
Organo Montmorillonite		1.0%	2.0%
VEHICLE			
Alkyd Resin Solution, Type I, Class A	Fed. Spec TT-R-266	43.0%	50.0%
Linseed Oil	ASTM D234	20.0%	27.0%
Mineral Spirits, Type II[1]	Fed. Spec TT-T-291E		28.0%
Driers		1.0%	2.0%

[1]Small quantities of alcohols or alcohol/water mixtures may replace some mineral spirits where such materials are used as polar additives for the suspending aid.

Table 1008-5
Corrosion Inhibiting Alkyd Paint System Chemical Requirements, Intermediate Coat

Pigment	Test Method	Min	Max
Calcium Boro-Silicate	ASTM D4288	80.0%	—
Synthetic Iron Oxide, Class I	ASTM D84	17.5%	18.5%
Organo Montmorillonite		1.5%	2.5%
Lampblack		—	2.0%
VEHICLE			
Alkyd Resin Solution, Type I, Class A	Fed. Spec TT-R-266	65.0%	—
Mineral Spirits, Type II[1]	Fed. Spec TT-T-291E	—	34.0%
Driers		1.0%	1.5%

[1]Small quantities of alcohols or alcohol/water mixtures may replace some mineral spirits where such materials are used as polar additives for the suspending aid.

1008.08 MAINTENANCE OVERCOATING OF STEEL BRIDGES.

Use an overcoat system from the Approved Materials List. For source approval, a field trial is required, which consists of a three year side-by-side comparison between the new overcoat system and a corrosion inhibiting alkyd paint "control" system. Both systems shall overcoat a red lead paint system and/or approved alternate system. The new overcoat paint system shall perform as well or better than the control system in the areas of blistering, rusting, fading, chalking, and adhesion. Alternate testing programs such as NTPEP and NEPOVERCOAT will be allowed if approved by the Materials Engineer Administrator.

Paint used on projects will be sampled and tested and shall comply with the following requirements:

Table 1008-6
Paint Overcoat System Properties

Property	Test Method	Tolerance[1]
Pigment Content	ASTM D2698	±2.0%
Density	ASTM D1475	±0.25 lbs/gal (±0.03 kg/l)
Total Solids Content	ASTM D2369	±2.0%
Non-volatile in Vehicle Content	ASTM D2698	±2.0%
Viscosity, Ku	ASTM D562	±5KU
Dry to Touch	ASTM D1640	±10%
Dry Through	ASTM D1640	±10%
Sag, Lenetta	ASTM D4400	±10%
Infrared Spectrum	DOTD TR 610	Match original[2]

[1]Target values shall be established by the Materials and Testing Section upon qualification of the paint system.
[2]Standards for infrared spectrum shall be kept on file and compared to project samples for acceptance purposes.

The topcoat shall be tinted to match federal color # 36463 from Federal Standard 595C for non-weathering steel and tinted to match federal color # 30045 from Federal Standard 595C, for weathering steel, unless otherwise specified.

Section 1009
Reinforcing Steel, Strand, and Wire Rope

1009.01 REINFORCING STEEL. Comply with the "Buy America Provisions" in 106.04.

Use reinforcing steel for concrete complying with the following unless otherwise specified. Use Grade 60 reinforcing steel in bridge structures and other structures. Grade 40 may be used in portland cement concrete pavement (PCCP) structures. Comply with specifications below, as applicable.

Use rebar chairs, ties, and miscellaneous accessories compatible with the reinforcement.

1009.01.1 Billet-Steel: Deformed and plain bars shall comply with ASTM A615 and shall be from the Approved Materials List.

1009.01.2 Rail-Steel and Axle-Steel: Deformed and plain bars shall comply with ASTM A996.

1009.01.3 Cold-Drawn Steel Wire: Plain wire shall comply with ASTM A1064 with the following amendment: For material testing over 110,000 psi tensile strength in high strength applications such as spirals and ties, reduce the 25 percent minimum reduction in area by 5 percent for each 10,000 psi increment of tensile strength exceeding 110,000 psi.

Deformed wire shall comply with ASTM A1064.

1009.01.4 Steel Welded Wire Reinforcement: Comply with ASTM A1064. Use deformed reinforcement for bridge structures.

1009.01.5 Stainless Deformed Reinforcing Steel: Conform to ASTM A955, Type 316LN UNS Designation S31653, UNS Designation S31803, or UNS Designation S32304.

1009.01.6 Galvanized Deformed Reinforcing Steel: Comply with ASTM A767.

1009.01.7 Epoxy Coated Reinforcing Steel and Patching Materials: Use products from the Approved Materials List and comply with ASTM A775.

1009.02 BAR SUPPORTS AND TIE WIRES. Bar supports (chairs) shall be metal wire. The bottom of bar supports shall be coated with an acceptable epoxy or plastic material for a minimum distance of 2 inches from the point of contact with the forms. Metal chairs in contact with the metal forms shall be hot-dipped galvanized, electroplated with zinc (GS Grade), epoxy coated, or stainless steel.

Metal tie wires and bar supports shall be coated fully with an acceptable epoxy, plastic or nylon material if using epoxy coated steel.

1009.03 DOWEL BARS.

1009.03.1 PAVEMENT DOWEL BARS: Steel dowel bars shall comply with 1009.01.1, 1009.01.2, or 1009.01.3. Dowels shall have a uniformly round cross section and shall be saw cut, smooth and free of burrs, projections and deformations.

Coated dowel bars shall be undercoated with an adhesive and given an outer coat of polypropylene or polyethylene. Coated dowel bars shall comply with AASHTO M 254. For PCCP, place coated dowel bars in approved dowel bar assemblies in accordance with the plans.

1009.04 STEEL STRAND FOR PRE-STRESSING AND POST-TENSIONING. Strand shall comply with ASTM A416. The strand manufacturer shall submit to the Construction Section three copies of Certificates of Analysis of all test results as stipulated in ASTM A416, and as part of this certificate, shall provide the modulus of elasticity of that particular mill heat of strand. The Department reserves the right to conduct inspections at the site of manufacture and to have all tests witnessed by its inspector. The data from the manufacturer's typical curve shall be used when computing the required elongation for each strand.

1009.05 ANCHORAGES AND HARDWARE FOR PRESTRESSING. Anchorages, including hold down and miscellaneous hardware, shall be sampled in accordance with the Materials Sampling Manual and submitted to the Construction Fabrication Engineer for acceptance after evaluation or testing.

1009.06 WIRE ROPE. Wire rope shall comply with Federal Specifications RR-W-410G or the latest federal specifications and the following:

Comply with Table 1009-1 when selecting the type and classification of wire rope.

When wire joints are necessary, they shall be electrically butt-welded; and in the stranding operation, no two joints in any strand shall be closer than 25 feet, except for filler wires.

Table 1009-1
General Wire Rope Classification and Usage

Type	Classification	Usage
I	1. (6x7)	Haulage rope, for use where strength and durability are desirable, but not much bending is required. May be used as single line for pulling load, but not suitable for sheave work.
	2. (6x19)	Most widely used for cranes, derricks, dredges, draglines and scrapers. This classification is very rugged, withstands abrasion well and is generally suited for all-around use.
	3. (6x37)	For hoisting rope where maximum flexibility is required; for instance, hoisting rope that runs over small sheave on draglines.
II	1. (8x19)	High speed elevator rope.
III (Marine)	1. (6x6)	Deck lashing ropes.
	2. (6x12)	Running ropes.
	3. (6x24)	Mooring lines.
	4. (6x3x7)	Spring lay.
	5. (6x3x19)	Spring lay.
	6. (6x42)	Tiller or hand control rope.
IV (Special)	1. (18x7)	Nonrotating (for drill rigs)

1009.07 WIRE ROPES FOR MOVABLE BRIDGES. See Sections 821.07.31, 821.07.32, and 821.07.33.

Section 1010
Fence and Guard Rail

1010.01 BARBED WIRE. Comply with the "Buy America Provisions" in 106.04.

Barbed wire shall be either steel or aluminum alloy and shall be 12 1/2 gage.

1010.01.1 Steel Barbed Wire. Comply with ASTM A121.

1010.01.2 Aluminum Alloy Barbed Wire. Comply with ASTM B211, Alloy 5052-O for line wire and Alloy 5052-H38 for barbs.

1010.02 WOVEN WIRE. Comply with one of the following Design Numbers and Grades of ASTM A116.

Design No.	Grade
939-6-11	60
939-6-12 1/2	60
939-6-14 1/2	125
939-6-12 1/2	125

1010.03 POSTS AND BRACES FOR FIELD AND LINE TYPE FENCE. Posts and braces shall be either steel or treated timber.

1010.03.1 Treated Timber Posts and Braces: Posts shall be round. Braces shall be either round or square. Comply with Section 1014.

1010.03.2 Steel Posts and Braces: Steel posts and braces shall be equipped with corrugations, knobs, notches, holes, or studs so placed and constructed as to engage a substantial number of fence wires in proper position. Posts may be punched with holes in such position and of such size as will not unduly impair the strength of the posts. Posts with punched tabs used for fastening wires are not acceptable. Corner, end, and bracing posts shall be supplied with necessary holes and with galvanized bolts of standard commercial quality or other satisfactory substitute, such as castings, for fastening braces to the posts.

Line posts, anchor plates, and braces shall comply with ASTM A702, except that a hardness test may not be substituted for the tensile test. Steel posts, anchor plates, and braces shall be galvanized in accordance with ASTM A123.

1010.04 STAPLES AND NAILS. Staples and nails shall be made of galvanized steel wire. Minimum galvanized coating shall be not less than 0.20 ounce per square foot when tested in accordance with ASTM A90.

1010.05 METAL FASTENERS FOR STEEL POSTS. Metal fasteners for steel posts shall be galvanized steel-wire fasteners or clamps and shall be satisfactory for use with the type of steel post furnished. Wire shall be not less than 0.120 inch diameter. Galvanized coating shall not be less than 0.20 ounce per square foot when tested in accordance with ASTM A90.

1010.06 GATES FOR FIELD AND LINE TYPE FENCE.

1010.06.1 Gates: Steel used in fabricating gates shall be galvanized in accordance with ASTM A653 Coating Designation G60.

1010.06.2 Posts:

1010.06.2.1 Treated Timber: Comply with Section 1014.

1010.06.2.2 Metal: Metal posts shall be made of galvanized steel pipe, standard weight, complying with ASTM A53.

1010.06.3 Hardware: Hinges, washers, nails, staples, welded chains, and latches shall be galvanized, of acceptable quality, and of satisfactory type for use with the gate and posts selected.

1010.06.4 Gate Stops:

1010.06.4.1 Treated Timber: Gate stops shall be timber complying with 1010.03.1 treated in the same manner as posts.

1010.06.4.2 Metal: Gate stops shall be acceptable galvanized steel suitable for welding to the post.

1010.06.5 Stop Posts: Stop posts for double swinging driveway gates shall be treated timber complying with Section 1014.

1010.07 CHAIN LINK FENCE, GATES AND APPURTENANCES. Comply with AASHTO M 181 except for the following.

Wire ties, fabric ties, hog rings, and tension wire for Type I, II, or III fencing shall be aluminum alloy, galvanized ductile steel, or aluminum-coated ductile steel wire.

1010.07.1 Wire Ties: Wire ties, fabric ties, and hog rings shall have 20,000 psi minimum tensile strength, and 10 percent minimum elongation. Steel shall be coated with at least 0.60 ounce of zinc or 0.40 ounce of aluminum alloy per square foot of uncoated wire surface. Wire ties shall be AWG No. 9. Fabric ties and hog rings shall be AWG No. 12.

1010.07.2 Tension Wire: Galvanized and aluminum-coated steel tension wire shall be AWG No. 9 wire having at least 75,000 psi tensile strength with at least 0.70 ounce of zinc or 0.40 ounce of aluminum alloy per square foot of uncoated wire surface.

Aluminum alloy tension wire shall be AWG No. 6 wire having at least 42,000 psi tensile strength, 35,000 psi yield strength, and 10 percent elongation.

Barbed wire used with chain link fence shall comply with 1010.01.

Padlocks shall be solid jacket, extruded brass metal with interchangeable cores and 1 3/4-inches cases. All padlocks shall be keyed alike. Furnish two keys for each padlock.

1010.08 GROUNDING. Ground rod assemblies suitable for grounding fences and other applicable grounding requirements shall meet the following requirements:

1010.08.1 Ground Rods: Ground rods shall be a minimum 5/8 inch nominal diameter copper weld steel rod with a minimum length of 8 feet.

1010.08.2 Ground Wire: Ground wire shall be an AWG No. 6 solid copper conductor firmly attached in such a manner that fence fabric, barbed wire, metal post and ground rod are electrically connected.

1010.08.3 Mechanical Connectors: Mechanical connectors will only be allowed where exothermic welds cannot be achieved. Mechanical connectors for attaching ground wire to ground rods is not allowed. Mechanical connectors for attaching ground wire to fence fabric, barbed wire and metal posts shall be solid copper alloy UL approved. Coated steel hardware will not be permitted.

1010.09 METAL BEAM FOR HIGHWAY GUARD RAIL. Rail elements shall be corrugated sheet steel beams from the Approved Materials List. Guard rail elements, terminal sections, and fittings shall be interchangeable with similar parts, regardless of source or manufacturer.

Guard rail, terminal sections, and appurtenances shall comply with AASHTO M 180 and the DOTD standard plans.

The fabricator shall annually file a Brand Registration and Guarantee with the DOTD Materials Engineer Administrator.

1010.10 GUARD RAIL POSTS AND BLOCKOUTS. Railing posts shall be either timber or steel. Furnish the same kind of posts on a structure. Furnish timber post blockouts or an approved alternate material that is approved by the Federal Highway Administration and also complies with

NCHRP 350 or the latest edition of the AASHTO Manual for Assessing Safety Hardware (MASH).

1010.10.1 Timber Posts and Blockouts: Timber and preservative treatment shall comply with Section 1014.

1010.10.2 Steel Posts:

Comply with AASHTO M 270, Grade 36 galvanized in accordance with ASTM A123. Furnish Certificates of Analysis (Mill Test Reports) together with a Fabricator's Material Statement and Certificate of Compliance in accordance with 1013.01. Field welding is not allowed unless specifically required by the plans.

1010.10.3 Guard Rail Attachments:

Concrete for guard rail attachments shall comply with Section 901 Class A1. Reinforcement shall comply with Section 1009.

1010.11 GUARD RAIL HARDWARE. For non-proprietary systems and components bolts shall comply with ASTM A307, Grade A and nuts shall comply with ASTM A563, Grade A
(Property Class 5). Washers shall comply with ANSI B18.22 for regular Type B series.

Fittings, bolts, washers, and other accessories for steel guard rail shall be galvanized after fabrication in accordance with Section 811.

1010.12 WIRE ROPE AND FITTINGS FOR HIGHWAY GUARD RAIL. Comply with AASHTO M 30.

Section 1011
Concrete Curing Materials, Admixtures, and Special Finishes

1011.01 CURING MATERIALS.

1011.01.1. Liquid Membrane-Forming Compounds: This material shall comply with ASTM C309 and shall be from the Approved Materials List. Allowable types are Type 2 white-pigmented or Type 1-D, clear or translucent with a fugitive dye, as specified.

1011.01.2 Moist Cure Materials:

1011.01.2.1 Sheet Material: Use sheet materials for curing concrete meeting the physical and performance requirements of ASTM C171.

1011.01.2.2 Burlap Cloth: Use burlap cloth made from Jute or Kenaf complying with AASHTO M 182, Class 3.

1011.02 ADMIXTURES.

1011.02.1 Physical Requirements: Use concrete admixtures from the Approved Materials List, which comply with Table 1011-2 when tested in accordance with DOTD TR 224.

1011.02.2 Chemical Requirements: The contribution of chloride ion resulting from the addition of admixtures to the concrete shall not exceed 0.02 pound per cubic yard of concrete, when tested in accordance with DOTD TR 643.

1011.02.3 Acceptance Testing: The admixture shall be tested by analytical infrared (IR) spectroscopy in accordance with DOTD TR 610. The IR spectrum shall compare favorably to the standard IR spectrum of the original material tested and on file at the Materials and Testing Section. The percent solids by weight, determined in accordance with DOTD TR 524, shall not deviate more than ±10 percent from that of the original approved material and shall not exceed the manufacturer's stated limits. Tests to determine rate of hardening, compressive strength or other properties may be made at any time during the work to ensure continued compliance with these specifications.

1011.03 SPECIAL FINISH FOR CONCRETE. Use material from the Approved Materials List. The material shall provide a uniform-textured finish complying with these specifications. Follow the manufacturer's recommendation for method of mixing, method of application, and rate of

application, except that the rate shall not exceed 60 square feet per mixed gallon. Modifications to the manufacturer's recommendations will not be permitted.

Use a one-component coating system containing pigments, sand and resins. The coating shall contain fungicides to prevent the growth of mildew, mold, etc. Color and texture of the material when applied to the test panel shall closely match that of the standard "Louisiana Gray" color chip on file (similar to federal color # 36440 from Federal Standard 595C) at the Materials and Testing Section.

For project samples, comply with Table 1011-1.

Table 1011-1
Special Finish Sample Acceptance

PROPERTY	TEST METHOD	SPECIFICATIONS ACCEPTANCE[1]
Density	ASTM D1475	Target Value ±0.25 lbs/gal
Viscosity	ASTM D562	Target Value ±5 KU
Dry to Touch	ASTM D1640	Target Value ±10%
Dry Through	ASTM D1640	Target Value ±10%
Solids percent	ASTM D2369	Target Value ±2%
Volatile percent	ASTM D2369	Target Value ±2%
Infrared Spectrum	DOTD TR 610	[2]

[1]Target Values shall be established by the Materials Section upon qualification of the paint system.
[2]Standards for infrared spectrum shall be kept on file and compared to project samples for acceptance purposes.

For source approval, comply with the following:

1. The average number of cycles to failure shall be not less than 50 cycles when tested in accordance with ASTM C666, Method A. Test specimens shall show no flaking, cracking, spalling or loss of bond.

2. The material shall be unaffected except for slight chalking or discoloration when exposed to 1000 hours of accelerated weathering using UV-B lamps in accordance with ASTM G154.

Table 1011-2
Physical Requirements for Admixtures

Property	Test Method	Water-Reducing			High Range Water Reducing		Set Accelerating	Specific Performance
		Air Entraining	Normal Set	Set Retarding	Normal Set	Set Retarding		
Unit Water Content,								
Max. % of Control		90	95	95	88	88	---	---
Min. % of Control		—	89	89	---	---	---	---
Air Content, %, Total	DOTD TR 202	5 ± 1	0 to 3	0 to 3	0 to 3	0 to 3	0 to 3	---
Time of Setting, allowable deviation from control, hr:min.	AASHTO T 197							
Initial: at least		—	—	1:30 later	—	1:30 later	1:00 earlier	1:00 earlier
not more than		—	1:00 earlier nor 1:30 later	3:30 later	1:00 earlier nor 1:30 later	3:30 later	3:30 earlier	1:30 later
Final: at least		—	—	—	—	—	1:00 earlier	1:00 earlier
not more than		—	1:00 earlier or 1:30 later	3:30 later	1:00 earlier or 1:30 later	3:30 later	—	1:30 later
Compressive Strength, Min. % of Control	DOTD TR 230							
1 Day		—	—	—	140	125	125	—
3 Days		—	—	—	125	125	100	90
7 Days		85	105	105	115	115	100	90
28 Days		85	105	105	110	110	100	90
6 Months		—	—	—	100	100	—	90
1 year		—	—	—	100	100	—	90
Flexural Strength, Min. % of Control	AASHTO T 97							
3 Days		—	—	—	110	110	—	90
7 Days		—	—	—	100	100	100	90
28 Days		—	—	—	100	100	100	90
Relative Durability Factor, Min. % of Control	AASHTO T 161	—	—	—	100	100	100	80

Section 1012
Vacant

Section 1013
Metals

1013.01 STRUCTURAL STEEL. Comply with the "Buy America Provisions" in 106.04.

Obtain all applicable physical and chemical tests and furnish the Construction Section five copies of the Certificates of Analysis (Mill Test Reports) together with a Fabricator's Material Statement and Certificate of Compliance. This form will be furnished by the Department upon request.

Structural steel shall comply with AASHTO M 270.

The main load-carrying structural member components that are subject to tensile stress shall meet the longitudinal Charpy V-Notch requirements for Temperature Zone 1 contained in the AASHTO M 270 Supplemental Requirements for Non-Fracture Critical Impact Test Requirements and for Fracture Critical Impact Test Requirements. Sampling and testing procedures shall be in accordance with AASHTO T 243 and AASHTO T 244.

1013.02 RIVET STEEL.

1013.02.1 Structural Rivet Steel: Comply with ASTM A502, Grade 1.

1013.02.2 High Strength Rivet Steel: Comply with ASTM A502, Grade 2.

1013.03 COPPER BEARING STEEL. Copper bearing steel shall contain at least 0.2 percent copper.

1013.04 STEEL FORGINGS AND STEEL SHAFTING.

1013.04.1 Carbon and Alloy Steel Forgings: Steel forgings shall comply with ASTM A668. Class C forgings shall be furnished except in cases specified below:

1013.04.1.1 Forged Shafts: Comply with ASTM A668, Class F.

1013.04.1.2 Forged Trunnions: Comply with ASTM A668, Class G.

1013.04.2 Alloy Steel Forgings for Pinions and Reduction Gears: Comply with ASTM A291, Class 3 or 3A.

1013.04.3 Cold Finished Steel Shafting: Cold finished carbon steel shafting shall comply with ASTM A108. Cold finished alloy steel shafting shall comply with ASTM A331.

1013.05 STEEL CASTINGS.

1013.05.1 Steel Castings for Highway Bridges: Comply with ASTM A27, Grade 70-36.

1013.05.2 High Strength Steel Castings: Comply with ASTM A148.

1013.05.3 Chromium Alloy Steel Castings: Comply with ASTM A743, Grade CA-15. Galvanizing for steel castings used for frames, grates, and covers shall be in accordance with ASTM A123.

1013.06 CAST IRON CASTINGS. Castings shall be true to pattern in form and dimensions and free from pouring faults, sponginess, cracks, blowholes, and other defects in positions affecting strength and value for the service intended. Castings shall be boldly-filleted at angles, and rises shall be sharp and perfect. Castings shall be sandblasted or otherwise effectively cleaned of scale and sanded to a smooth, clean and uniform surface.

1013.06.1 Gray Iron and Ductile Castings: Comply with AASHTO M 306.

1013.06.2 Malleable Castings: Comply with ASTM A47, Grade 32510. Castings weighing more than 1,000 pounds shall be ultrasonically tested for voids. If voids are found, the casting will be rejected.

1013.06.3 Ductile Iron Castings: Comply with ASTM A536, Grade 60-40-18.

1013.07 BRONZE OR COPPER ALLOY BEARING AND EXPANSION PLATES.

1013.07.1 Bronze Bearing and Expansion Plates: Comply with ASTM B22, Alloy C 91100.

1013.07.2 Rolled Copper-Alloy Bearing and Expansion Plates: Comply with ASTM B100, Alloy C 51000.

1013.08 BOLTS, NUTS, WASHERS, AND HARDWARE. If galvanizing is required, comply with Section 811.

1013.08.1 Carbon Steel Bolts, Nuts, and Washers: When high strength bolts are not required, bolts shall comply with ASTM A307 Grade A, and nuts shall comply with ASTM A563. Unless otherwise specified, any appropriate steel washers can be used and the washer coating must be similar to the bolts and nuts coating. Machine bolts may have either square or hex heads and nuts.

1013.08.2: ASTM A325 and A490 have been replaced by ASTM F3125. References to A325 and A490 are to be taken to mean ASTM F3125,

Grade A325 and A490 respectively. Bolts, nuts, and washers shall have plain surface finish unless otherwise specified.

1. High strength bolts shall comply with ASTM F3125, Grade A325 (formally ASTM A325) or Grade A490 (formally ASTM A490), as specified. For ASTM A325 bolts, Type 1 bolts shall be used; except that Type 3 bolts shall be used with unpainted AASHTO M 270, Grade 50W and 70W steels.

2. For Type 1 bolts, the nuts shall comply with ASTM A563, Grade DH or ASTM A194 Grade 2H. For Type 3 bolts, the nuts shall comply with ASTM A563, Grade DH3.

3. Circular washers for high strength bolts shall comply with ASTM F436.

4. Direct Tension Indicators shall comply with ASTM F959 and shall match the material type of the bolt, nut, and washer used in the same assembly.

1013.08.3 Stainless Steel Bolts, Nuts, and Washers: Stainless steel bolts and nuts shall comply with ASTM A320, Grade B 8, annealed or approved equal. Washers shall comply with ASTM F436 and shall be fabricated from stainless steel material with equal or better corrosion resistance as the bolt.

1013.08.4 Anchor Bolts, Nuts, and Washers: Steel anchor bolts shall comply with ASTM F1554. Steel hex nuts shall comply ASTM A563 or ASTM A194 and shall comply with the grade, surface finish, and style recommendations of ASTM F1554. Steel washers shall comply with ASTM F436, Type 1.

Stainless steel anchor bolts and hex nuts shall comply with ASTM F593, Group 2, Alloy 316. For high strength applications, comply with F593, Group 7, Alloy 630. Washers shall comply with ASTM F436 and shall be fabricated from stainless steel material with equal or better corrosion resistance as the bolt.

1013.08.5 Hardware: The minimum corrosion protection for bridge hardware is galvanization in accordance with ASTM A153 or ASTM A123 or an approved mechanical galvanizing process complying with ASTM B695 that provides the same coating thickness.

Eyebolts shall comply with ASTM A489.

1013.09 STEEL H PILES. Comply with AASHTO M 270, Grade 36.

1013.10 SHEET PILES. Steel sheet piles shall comply with ASTM A328 or ASTM A572. Substitution of ASTM A588 for A572 may be allowed with

approval of the Bridge Engineer Administrator. Steel sheet pile shall be hot rolled with a ball-and-socket type interlocking joint. Aluminum sheet piles shall comply with ASTM B221, Alloy 6061-T6 or Alloy 6063-T6 or ASTM B209 Alloy 3064-H34.

1013.11 STEEL PIPE PILES. Comply with ASTM A252, Grade 2.

1013.12 SHEET COPPER. Comply with ASTM B152.

1013.13 SHEET LEAD. Comply with ASTM B29.

1013.14 SHEET ZINC. Comply with ASTM B69, Type II.

1013.15 COLD-ROLLED STEEL. Cold-rolled steel shall be cold-finished steel complying with ASTM A108.

1013.16 BRONZE.

1013.16.1 Center Discs for Movable Bridges: Comply with ASTM B22, Alloy C91300.

1013.16.2 Trunnion and Similar Bearings for Movable Bridges: Comply with ASTM B22, Alloy C91100.

1013.16.3 Shafts and Ordinary Bearings: Comply with ASTM B22, Alloy C90500.

1013.16.4 Gears, Nuts Transmitting Motion, and Other Parts Involving Stresses Other Than Compression: Comply with ASTM B22, Alloy C90500.

1013.17 BABBITT METAL. Comply with ASTM B23, Alloy 3.

1013.18 STEEL FOR CENTER DISCS (Movable Bridges). Comply with ASTM A668, Class F.

1013.19 STEEL FOR KEYS (Movable Bridges). Comply with 1013.15 or ASTM A668, Class D.

1013.20 SEAMLESS STEEL PIPE AND TUBING FOR HYDRAULIC LINES. Carbon steel pipe for hydraulic lines shall comply with ASTM A106, Grade B. Fittings for hydraulic lines shall comply with ASTM A105. Stainless steel tubing shall be seamless austenitic stainless steel and shall comply with ASTM A269.

1013.21 GALVANIZED STEEL PIPE RAILINGS.

1013.21.1 Galvanized Steel Pipe: Galvanized steel pipe shall be standard weight complying with ASTM A53.

1013.21.2 Fittings and Castings: Fittings and castings for steel pipe shall be malleable iron or cast steel complying with ASTM A47, Grade 32510 or ASTM A27, Grade 70-36. Fittings and castings shall be galvanized in accordance with ASTM A153. Make repairs to galvanized surfaces in accordance with 811.08.

For each heat or foundry pour of iron or steel post casting, the Certificates of Analysis shall give chemical and physical test results, including the ounces per square foot of galvanized coating applied. These results shall be on file and accessible for review by the Department if requested.

1013.22 STEEL PIPE AND TUBING FOR BRIDGE RAILING. Steel pipe shall be standard weight ASTM A53, Grade B pipe. Rectangular tubing sections shall be ASTM A500, Grade B or ASTM A501, Grade B. Other railing components shall meet the requirements of AASHTO M270, Grade 50 except that the maximum tensile strength requirement will be waived.

1013.23 ALUMINUM FOR BRIDGE RAILING. Aluminum pipe, tubing, and structural shapes shall conform to ASTM B221 or ASTM B429, Alloy 6061-T6. Base plates and post caps shall conform to ASTM B209, Alloy 6061-T6.

1013.24 STEEL FOR OPEN GRID BRIDGE FLOORING. Comply with 1013.01.

1013.25 DUCTILE CAST IRON BEARINGS. Comply with ASTM A536.

1013.26 SHEAR CONNECTORS. Shear connector studs shall be Type B studs complying with ANSI/AASHTO/AWS D 1.5, Bridge Welding Code.

1013.27 CONCRETE ANCHOR STUDS. Concrete anchor studs used for end dam plates, bearing plates or other concrete anchorage shall be Type A studs complying with the latest edition of ANSI/AASHTO/AWS D1.5, Bridge Welding Code.

1013.28 STEEL FOR STAY-IN-PLACE FORMS. Comply with ASTM A653 with a minimum G 165 coating for non-corrosive environments, G235 for corrosive environments and G235 with polymer coating for coastal environments.

Section 1014
Timber, Timber Connectors, and Preservatives

1014.01 STRUCTURAL TIMBER AND LUMBER. Structural timber and lumber shall be qualified products as determined by the Construction Fabrication Unit. For species and grade of structural timber and lumber comply with AASHTO M 168 and the following requirements.

1014.01.1 Southern Pine. For Southern Pine lumber, comply with the latest version of the Standard Grading Rules for Southern Pine Lumber published by the Southern Pine Inspection Bureau (SPIB). Use the appropriate grade of lumber as designated in the plans or specifications.

1. Caps, stringers, decking, and bridge rails shall be Grade No. 1 Dense Timbers.
2. Items other than caps, stringers, decking, and bridge rail shall be Grade No. 1 Timbers.

1014.01.2 Douglas Fir. For Douglas Fir lumber, comply with the latest version of the Standard Grading Rules for Western Lumber published by the West Coast Lumber Inspection Bureau (WCLB) or Western Lumber Grading Rules published by Western Wood Products Association (WWPA). Use the appropriate grade of lumber as designated in the plans or specifications. Comply with the following:

1. Caps, stringers, decking, and bridge rail shall be composed of "Select Structural" members.
2. Items other than caps, stringers, decking, and bridge rail shall be composed of Grade 1 members.

1014.01.3 Structural Glued Laminated Timber (GLULAM). Structural glued laminated timber (glulam) shall be qualified products as determined by the DOTD Construction Fabrication Unit. Glulam shall comply with AASHTO M-168 and meet the requirements of ANSI A190.1

1014.02 TIMBER PILES, POLES, POSTS, AND BRACES.

1014.02.1 Timber Piles: Timber piles shall be Class B Southern Yellow Pine or Douglas Fir and shall comply with ASTM D25.

1014.02.2 Timber Poles: For timber poles, use Southern Pine or Douglas Fir and comply with ANSI 05.1.

1014.02.3 Timber Posts and Braces: Posts and braces shall be cut from sound trees (not limbs) and shall not contain any unsound knots. Sound knots will be permitted if the diameter of the knot does not exceed 1/3 the diameter of the piece at the point where it occurs. Posts and braces shall be free from decayed wood, rot, and red heart. Ring shakes and season checks

which penetrate more than 1/4 inch will be cause for rejection. Posts and braces shall show at least four annular rings per inch and at least 1/3 summer wood, "dark bands."

Fence posts shall be peeled for their full length; all outer and inner bark shall be removed. Knots shall be trimmed close to the surface of the post before treatment. A line drawn from center of top to center of butt shall neither fall outside the body of the posts nor at any point exceed more than 1 inch from the geometric center of the post. Posts and braces shall be free from short or reverse crook. Excessive bow, camber, twist, or other such defects in posts and brace will be cause for rejection. Ends shall be sawn square.

Guard rail posts and blockouts shall be treated timber of Southern Pine Grade No. 1 or Douglas Fir Dense No. 1. Posts and blockouts shall be fabricated before treatment.

When round timber posts are specified or shown in the plans for guard rail, the posts shall be 7 1/4 inches in diameter plus or minus 1/8 inch at any point, as determined by a circumference-diameter tape. The length shall not vary more than 1 inch from plan length. The round timber post top shall be domed approximately hemispherical in shape and the radius of the dome shall be 4 inches. The dome shall be smooth, and the distance from the top of the dome to the base of the dome shall not vary more than 3/4 inch at any location. All round timber posts shall be smooth shaved by machine and no "ringing" will be permitted. All outer and inner bark shall be removed during the shaving process. All knots and knobs shall be trimmed smooth and flush with the surface of the post. Each post shall have minimum sapwood depth of 1 inch measured at any location within the circumference. The maximum diameter of any single knot shall not exceed 3 inches. The sum of the diameters of all knots greater than 0.5 inch in any 1-foot section shall not exceed 8 inches. A straight line drawn from the center of the top to the center of the butt of any post shall not deviate from the centerline of the post more than 1/4 inch at any point. Splits or ring shakes are not permitted in the top for round post. Splits are not permitted in the butt. A single shake is permitted in the butt, provided it is not wider than one half the butt diameter.

Guard rail timber species (blockouts/braces) shall be the same as those furnished for the timber posts. The actual finished size of blockouts for round timber posts shall be 5 3/4 inch square, with a tolerance of 1/8 inch plus or minus. Each of the four corners of each block shall be machined down to provide a flat 1 inch surface the entire length of the block with a tolerance of 1/4 inch plus or minus. Each block shall be machine concaved to a radius of 3 5/8 inches, and to a depth of 3/4 inch. The size and hole location shall be

as shown on the plans. Blockouts shall be of medium grain, at least 4 rings per inch, and free from splits, shakes, compression wood or decay in any form. Individual knots, knot clusters or knots in the same cross section of a face are permitted, provided they are sound or firm, and are limited in cumulative width (when measured between lines paralleled to the edges) to no more than one third the width of the face. Grain deviation is limited to 1 inch in 6 inches. The material may be sawn or surfaced.

1014.02.4 Glulam Poles, Posts, and Braces. Glulam poles shall comply with ANSI 05.2. Glulam posts and braces shall comply with ANSI 05.3. Glulam is not to be used for pile applications.

1014.03 TIMBER PRESERVATIVES. The type preservatives to be used are as follows:

1014.03.1 Creosote (CR): For creosote used for land and fresh and coastal water applications, comply with AWPA P1/P13.

1014.03.2 Creosote Solutions (CR-S): For creosote solutions for fresh and coastal water applications, comply with AWPA P2.

1014.03.3 Pentachlorophenol-Petroleum Solution (Penta): Comply with AWPA P35.

1014.03.4 Copper Naphthenate (CuN): Comply with AWPA P8/P9.

1014.03.5 Chromated Copper Arsenate (CCA): Comply with AWPA P23, Type C.

1014.03.6 Ammoniacal Copper Zinc Arsenate (ACZA): Comply with AWPA P22.

1014.03.7 Alkaline Copper Quat (ACQ): Comply with AWPA P26 for Type A (ACQ-A). Comply with AWPA P27 for Type B (ACQ-B). Comply with P28 for Type C (ACQ-C).

1014.03.8 Copper Azole (CA): Comply with AWPA P32 for Type B (CA-B). Comply with AWPA P48 for Type C (CA-C).

1014.03.9 Field Repairs: Comply with AWPA M4 and product manufacturer's recommendations. Repair any surface that is exposed by damage or field fabrication by treating with copper naphthenate containing a minimum of 2.0 percent copper metal. Apply solution to these exposed surfaces until absorption stops. Remove excess preservative. Bored holes for connectors or bolts may be treated by pumping coal-tar roofing cement meeting ASTM D5643 into holes using a grease gun or similar device.

1014.04 TREATMENT.

1014.04.1 General: Materials shall be treated according to current AWPA U1 Standard Specifications for Preservative Treatment and used in the appropriate application.

1014.04.2 Amount of Preservative: The amount of preservative shall be the minimum specified in Table 1014-2 herein determined by assay. The assay zone shall be as specified in AWPA T1 Standards. All sample holes shall be filled with a tightly-fitted pressure-treated plug. All treated wood products shall meet all penetration requirements of AWPA Standards. The treating plant shall provide treating reports to the Department's inspector upon request. At the Department's discretion the treating reports may be used for acceptance of small miscellaneous charges of material.

1014.04.3 Painting: When painting of treated material is required, use a paint system that is compatible with the wood treatment process, and in accordance with manufacturer's recommendations

1014.05 TIMBER CONNECTORS. Connectors for treated timber structures, except those of malleable iron, shall be galvanized in accordance with ASTM A123.

1014.05.1 Split Ring Connectors: Split rings of 2 1/2 inches, 4 inches and 6 inches inside diameter shall be manufactured from hot-rolled, low-carbon steel conforming to ASTM A711, Grade 1015. Each ring shall form a closed true circle with an outside cylindrical surface parallel to the axis of the ring. The inside surface, except for the 6-inch ring, shall be beveled from the median line toward the edges. It shall be cut through in one place in its circumference to form a tongue and slot.

Connector grooves in timber shall be cut concentric with the bolt hole and have the dimensions shown in Table 1014-1.

Table 1014-1
Split Ring Timber Connector Dimensions, Inches

Nominal Ring Size	Inside Diameter	Groove Width	Groove Depth
2 1/2	2.56	0.18	0.37
4	4.08	0.21	0.50
6	6.12	0.27	0.62

1014.05.2 Toothed-Ring Connectors: Toothed-ring connectors shall meet the following requirements:

1. Stamp cold from 0.060 inch thick rolled sheet steel.
2. Comply with ASTM A711, Grade 1015.
3. Bend cold to form a circular, corrugated, sharp-toothed band and circle.
4. Be parallel to the axis of the ring.
5. The central band shall be welded to fully develop the strength of the band.
6. All sizes shall have an overall depth of 0.94 inch and depth of fillet of 0.25 inch.

1014.05.3 Shear Plate Connectors: Shear plate connectors shall be of the following types:

1014.05.3.1 Pressed Steel Type: Pressed steel shear plates of 2 5/8 inches in diameter shall be manufactured from steel complying with ASTM A711, Grade 1015. Each plate shall be a true circle with a flange around the edge, extending at right angles to the face of the plate and extending from one face only. The plate portion shall have a central bolt hole and two small perforations on opposite sides of the hole and midway from the center and circumference.

1014.05.3.2 Malleable Iron Type: Malleable iron shear plates of 4-inch diameter shall be manufactured according to ASTM A47, Grade 32510. Each casting shall consist of a perforated round plate with a flange around the edge extending at right angles to the face of the plate and projecting from one face only. The plate portion shall have a central bolt hole reamed to size with an integral hub concentric to the bolt hole and extending from the same face as the flange.

1014.05.4 Claw-Plate Connectors: Claw-plate connectors of 2 5/8 inches, 3 1/8 inches, and 4 inches in diameter shall be malleable iron, manufactured according to ASTM A47, Grade 32510. Each claw-plate shall consist of a perforated circular flanged plate with three-sided teeth arranged about the perimeter of one face. The male plate shall have integral cylindrical hubs on both faces concentric to a bolt hole through the center of the plate. The female plate shall be flat on the side opposite the teeth, but shall have an integral cylindrical hub concentric to the central bolt hole and on the face with the teeth.

1014.05.5 Spike-Grid Connectors: Spike-grid connectors shall be manufactured according to ASTM A47, Grade 32510. They shall consist of four rows of opposing spikes forming a 4 1/8 inch square grid with 16 teeth held in place by fillets. Fillets for the flat grid in cross section shall be diamond shaped. Fillets for single and double curve grids shall be increased

in depth to allow for curvature and shall maintain a thickness between sloping faces on fillets equal to the width of the fillet.

1014.06 HARDWARE AND STRUCTURAL SHAPES. Washers shall be cast ogee gray iron or malleable castings. Use a standard washer under heads of lag screws. Nails shall be cut or round wire of standard form. Spikes shall be cut wire or boat spikes. Structural shapes shall comply with Section 1013 for the type of metal used.

1014.07 QUALITY ASSURANCE. Inspection shall be in accordance with AWPA M2. Quality control shall be in accordance with AWPA M3. Care of the treated wood products shall be in accordance with AWPA M4. Treated timber and piles to be supplied from a DOTD certified plant and inspected and stamped by DOTD Construction prior to shipment. Notify DOTD Construction prior to treatment.

Table 1014-2
Minimum Retention of Preservative
(Pounds per Cubic Foot of Wood)

	CR[1]	CR-S	Penta	CuN (Cu as Metal)	CCA[2] and ACZA	ACQ-B ACQ-C ACQ-D	CA-B CA-C	MCA[4]
Timber & Lumber								
Above Ground: (UC3B) SP	SP 8.0	SP 8.0	SP 0.40	SP 0.04	SP 0.25	SP 0.25 B,C 0.15 D	SP 0.10 B 0.06 C	SP 0.06
Land & Fresh Water (UC4C) SP DF	SP/DF 12.0	SP/DF 12.0	SP/DF 0.50	SP/DF 0.075	SP/DF 0.60	SP/DF 0.60	SP/DF .031	SP/DF 0.23
Coastal Water (UC5C) SP DF	SP/DF 25.0	SP/DF 25.0	N/A	N/A	N/A	N/A	N/A	N/A
Piles Non-Foundation[3]								
Land & Fresh (UC4C) SP DF	SP 19.0 DF 12.0	N/A	SP 0.45 DF 0.60	N/A	SP 0.60 DF 0.60	N/A	SP 0.31 DF N/A	SP 0.23 DF N/A
Coastal Water (UC5C) SP DF	SP/DF 16.0	SP/DF 16.0	N/A	N/A	SP/DF 1.5 outer 0.9 inner	N/A	N/A	N/A
Piles Foundation[3]								
Land & Fresh Water (UC4C) SP DF	N/A	N/A	N/A	SP 0.10 DF.14	SP 0.80 DF N/A	SP 0.80 C DF N/A	SP 0.41 DF N/A	N/A
Coastal Water (UC5C) SP DF	SP/DF 25.0	SP/DF 25.0	N/A	N/A	SP/DF 1.5 inner	N/A	N/A	N/A
Poles								
(UC4C) SP DF	SP 9.0 DF 12.0 outer 6.0 inner	N/A	SP 0.45 DF 0.60 outer 0.30 inner	SP 0.13 DF 0.150 outer 0.175 inner	SP N/A DF 0.60	SP/DF 0.60 B	SP 0.31 DF N/A	N/A
Fence (UC4A)								
Gate Posts/Braces	N/A	N/A	N/A	0.055	N/A	0.40	0.21 B 0.15 C	0.15
Guard Rail Posts/Blockouts (UC4B)	10.0	10.0	0.50	0.069	0.50	0.50	0.25	0.23
Bridge Rails, Dead End Road Installations, Pedestrian Bridges: Rails & Posts								
Above Ground (UC3B) SP DF	N/A	N/A	N/A	N/A	N/A	0.25 B, C 0.5 D	0.10 B 0.06 C	0.06
Land & Fresh Water (UC4C) SP DF	N/A	N/A	N/A	N/A	N/A	0.60	0.31	0.23

[1]Timber, blockouts, poles and dead end road installations treated with creosote shall be steam flashed for a minimum of 1 hour at 240ºF after treatment
.[2]Material treated with CCA shall be conditioned by kiln drying prior to treatment.
[3]A building foundation pile is embedded in the ground and capped with concrete. A structure foundation pile is a fender system pile or any structure pile, except for those used for pile-supported approach slabs. Pile supported approach slab piles are classified as non-foundation.
[4]Micronized copper azole.

Section 1015
Signs and Pavement Markings

1015.01 GENERAL REQUIREMENTS. Signs and pavement markings materials shall comply with these specifications, the plans and the MUTCD. When directed, the contractor shall furnish and prepare samples for testing in accordance with Department instructions.

1015.02 METALS.

1015.02.1 Ferrous Metals:

1015.02.1.1 Structural Steel: Structural steel for posts, stringers, framing and miscellaneous steel shall comply with AASHTO M 270, Grade 36. Steel shall be galvanized in accordance with 811.12.

1015.02.1.2 Steel Pipe: Steel pipe or tubing for structures shall be Schedule 40 (STD) complying with ASTM A53, Type E or Type S Grade B, or hot formed tubing complying with ASTM A36 and ASTM A501.

1015.02.1.3 U-Channel Steel Posts for Small Signs, Markers, and Delineators: Posts shall be steel of the flanged channel type shown on the plans, galvanized after fabrication in accordance with 811.12. Before fabrication, posts shall be within 3.5 percent of the specified weight.

Posts shall be fabricated from steel complying with either ASTM A499, Grade 60 with chemical properties conforming to ASTM A1 for 91 lb/yd or heavier rail steel, or ASTM A576, Grade 1080 with 0.10 to 0.20 percent silicon. Holes 3/8 inch in diameter shall be drilled or punched through the middle of each post on one inch centers for the full length of the post.

1015.02.1.4 Square Tubing for Small Signs, Markers, and Delineators: Use 2 inches x 2 inches square tubing.

The square tubing shall conform to ASTM A1011, Grade 50 for hot rolled carbon steel, structural quality. The average minimum tensile strength after cold-forming is 60,000 psi. The cross section of the square tubing shall be a square tube formed and carefully rolled to size and shall be welded by high frequency resistance welding and externally scarfed to agree with corner radii and dimensional tolerances shown in the DOTD Roadside Traffic Sign Standard Details. It shall be manufactured from hot-dipped galvanized steel conforming to ASTM A653, G90, Structural Quality, Grade 50, Class 1. The weld shall be hot zinc coated after the scarfing operation. The steel shall be coated with a chromate conversion coating and a clear organic polymer topcoat.

Perforated sign posts shall be 2 inches x 2 inches square tubing for the upright sign post and 2 1/4 inches x 2 1/4 inches x 3 feet shall be used for anchoring into soil using wet concrete in accordance with the Roadside Traffic Sign Standard Plans.

1015.02.1.5 Square Tubing Breakaway Supports, Hardware and Related Accessories: These items shall meet the specifications in DOTD Roadside Traffic Sign Standard Details. The breakaway support shall be a Kleen-Break Model 425 post coupler manufactured by Xcessories Squared.

1015.02.2 Aluminum Alloy: Structural members shall be aluminum complying with ASTM B221 or ASTM B429, Alloy 6061-T6. Miscellaneous aluminum shall comply with ASTM B209, Alloy 6061-T6.

1015.02.3 Connectors:

1015.02.3.1 Structural Bolts, Nuts and Washers: High strength bolts shall comply with ASTM A325, and other bolts shall comply with ASTM A307, Grade A or Grade B. Bolts shall have hexagonal heads and include two flat washers and one lock washer and one hexagonal-head nut. Bevel washers, where required, shall be wrought steel. Bolts, nuts and washers shall be galvanized in accordance with ASTM A153 or by an approved mechanical galvanizing process complying with ASTM B695 that provides the same coating thickness.

Anchor bolts shall comply with ASTM F1554. Anchor bolts shall be hot dip galvanized in accordance with ASTM A153.

Stainless steel bolts shall comply with ASTM F593, alloy groups 1, 2, or 3 (except alloys 303 or 303 Se), with a minimum tensile strength of 70,000 psi.

1015.02.3.2 Fasteners: Use vandal resistant aluminum alloy fasteners with brasier heads complying with ASTM B316, Alloy 2024-T4, to attach Interstate, Louisiana, and U.S. shields to the sign panel.

1015.03 FLEXIBLE POSTS. Flexible posts for delineators shall be from the Approved Materials List.

1015.04 SIGN PANELS. Flat sign panels shall be marked on the front bottom edge with MUTCD code, initials of the manufacturer and the date. Extruded panels shall be marked on the back in accordance with the standard plans.

1015.04.1 Permanent Sign Panels: New and recycled flat panels shall be aluminum sheets or plates complying with ASTM B209, Alloy 6061-T6 or Alloy 5052-H38. New and recycled extruded aluminum panels

shall comply with ASTM B221, Alloy 6063-T6 and after fabrication, shall have a flatness equal to or less than 0.031 inch per foot of length and 0.004 inch per inch of width. The traceability paperwork shall be maintained and available from the fabricator for 7 years.

1015.04.2 Temporary Sign Panels: Substrate for barricade panels shall be rigid thermoplastic. Substrate for portable signs shall be new or recycled aluminum, wood or plastic. Substrate for post mounted signs shall be new or recycled aluminum, wood, rigid thermoplastic or aluminum clad low density polyethylene plastic.

1015.04.2.1 Aluminum: Aluminum sheeting shall be 0.080 inch thickness complying with ASTM B209, Alloy 6061-T6 or Alloy 5052-H38.

1015.04.2.2 Wood: Plywood sheeting of exterior type Grades either High Density Overlay or Medium Density Overlay are acceptable for use provided the following requirements are met.

Panels shall be a minimum of 5/8 inch thick, shall comply with the latest American Plywood Association specifications, and shall be identified with the APA edge mark or back stamp to verify inspection and testing. Prior to application of reflective sheeting, the surface shall be abraded with steel wool or fine sandpaper, and wiped thoroughly clean. The surface shall dry a minimum of 8 hours prior to application of sheeting. Cut edges of plywood panels shall be sealed with an approved aluminum pigmented polyurethane sealer.

1015.04.2.3 Plastic: Plastic substrate for barricade panels and signs shall be as follows:

1015.04.2.3.1 Fiber Reinforced Vinyl (PVC): The substrate shall have a nominal composite thickness of 0.04 inches and be bonded to an approved retroreflective material by the manufacturer.

1015.04.2.3.2 Rigid Thermoplastic: Rigid thermoplastic substrate shall consist of either High Density Polyethylene (HDPE) or High Density Polycarbonate (HDPC). The rigid thermoplastic for barricade panels shall be hollow core HDPE or HDPC with a minimum thickness of 0.625 inch. The thermoplastic for sign panels shall be 0.40 inch thick thin wall, fluted substrate or 0.625 inch thick blow molded substrate. Substrates shall be sufficiently rigid to maintain a flat face and shall be capable of attachment to the sign mounting in such a manner as not to crush or otherwise deform the substrate. Reflectorized sheeting applied to rigid thermoplastic shall have its manufacturer's approval for use on the substrate.

1015.04.2.3.3 Aluminum Clad Low Density Polyethylene (AL/LDPE) Plastic: The aluminum clad low density polyethylene plastic substrate shall be 0.080 inch thick. The substrates shall be sufficiently rigid

to maintain a flat face and shall be capable of attachment to the sign mounting in such a manner as not to crush or otherwise deform the substrate. Reflectorized sheeting applied to aluminum clad low density polyethylene shall have its manufacturer's approval for use on this substrate.

1015.05 REFLECTIVE SHEETING.

1015.05.1 Permanent and Temporary Standard Sheeting: Reflective sheeting shall be one of the following standard types as specified on the plans and complying with ASTM D4956 except as modified herein. Permanent warning, regulatory, guide and supplemental guide sign sheeting shall meet the requirements of DOTD Type X as described below and detailed in 1015.05.3. Reflective sheeting for temporary signs and devices shall meet the requirements of ASTM D4956 Type III except as noted in 1015.05.6. Reflective sheeting for delineators shall meet the requirements of ASTM D4956 Type III or Type V, including Supplemental Requirements S2. Reflective sheeting shall be from the Approved Materials List.

Type III - A high-intensity retroreflective sheeting. This sheeting is typically encapsulated glass-bead retroreflective material.

Type V - A "super high-intensity" retroreflective sheeting, typically used for delineators. This sheeting is typically a metalized microprismatic retroreflective element material.

Type VI - An elastomeric, high-intensity retroreflective sheeting without adhesive. This sheeting is typically a vinyl microprismatic retroreflective material.

DOTD Type X - A super high-intensity retroreflective sheeting having highest retroreflectivity characteristics at medium distances. This sheeting is typically an unmetalized microprismatic retroreflective element material.

1015.05.2 Fluorescent Pink Retroreflective Sheeting: Signs for temporary control of traffic through incident management areas shall be Type VI fluorescent pink retroreflective sheeting and shall comply with the MUTCD. Temporary traffic control signs for incident management shall be placed to notify motorists of upcoming incidents on the roadway, and shall be removed from public view once the incident has been managed. Physical properties shall comply with ASTM D4956. Photometric properties shall be as follows.

1015.05.2.1 Retroreflectivity: Minimum Coefficients of Retroreflection shall be as specified in Table 1015-1.

Table 1015-1
Coefficients of Retroreflection for Fluorescent Pink Sheeting[1]

Observation Angle, degrees	Entrance Angle, degrees	Fluorescent Pink
0.2	-4	180
0.2	+30	72
0.5	-4	81
0.5	+30	31

[1]Minimum Coefficient of Retroreflection (R_A) (cd $lx^{-1}m^{-2}$)

1015.05.2.2 Color and Daytime Luminance: Color Chromaticity Coordinates and Daytime Luminance Factors shall be as specified in Table 1015-2.

Table 1015-2
Fluorescent Pink Color Specifications Limits (Daytime)

Chromaticity Coordinates (corner points) [1]										Luminance Factor, min.
1		2		3		4		5		Y%
x	y	x	y	x	y	x	y	x	y	20
0.600	0.340	0.450	0.332	0.430	0.275	0.536	0.230	0.644	0.290	

[1]The five pairs of chromaticity coordinates measured with CIE 2° Standard Observer and 45/0 (0/45) geometry and CIE D65 Standard Illuminant.

1015.05.3 DOTD Type X Retroreflective Sheeting: Physical properties shall comply with ASTM D4956. Color shall conform to ASTM D4956, Table 11. Luminance shall conform to ASTM D4956, Table 2. Retroreflectivity properties shall be as follows:

1015.05.3.1 Retroreflectivity: Minimum Coefficients of Retroreflection shall be as specified in Table 1015-3.

Table 1015-3
Coefficients of Retroreflection for DOTD Type X Sheeting[1]

Observation Angle, (degrees) Entrance Angle, (degrees)	0.2 -4	0.2 +30	0.5 -4	0.5 +30
White	560	280	200	100
Yellow	420	210	150	75
Orange	210	105	75	37
Green	56	28	20	10
Red	84	42	30	15
Blue	28	14	10	5.0
Brown	17	8.4	6.0	3.0
Fluorescent Yellow-Green	450	220	160	80
Fluorescent Yellow	340	170	120	60
Fluorescent Orange	170	84	60	30

[1]Minimum Coefficient of Retroreflection (R_A) (cd $lx^{-1}m^{-2}$)

1015.05.4 Adhesive Classes: The adhesive required for retroreflective sheeting shall be Class 1 (pressure sensitive) as specified in ASTM D4956.

1015.05.5 Accelerated Weathering: Reflective sheeting, when processed, applied, and cleaned in accordance with the manufacturer's recommendations, shall perform in accordance with the accelerated weathering standards in Table 1015-4.

Table 1015-4
Accelerated Weathering Standards[1]

Type	Retroreflectivity[2]				Colorfastness[3]	
	Orange/ Fluorescent Orange		All colors, except Orange/ Fluorescent Orange		Orange/ Fluorescent Orange	All colors, except Orange/ Fluorescent Orange
III	1 year	80[4]	3 years	80[4]	1 year	3 years
III (for drums)	1 year	80[4]	1 year	80[4]	1 year	1 year
V	1 year[5]	80[6]	3 years[5]	80[6]	1 year[5]	3 years[5]
VI	1/2 year	50[7]	1/2 year	50[7]	1/2 year	1/2 year
DOTD X	1 year	80[8]	3 years	80[8]	1 year	3 years

[1]At an angle of 45° from the horizontal and facing south in accordance with ASTM G7 at an approved test facility in Louisiana or South Florida.
[2]Percent retained retroreflectivity of referenced table after the outdoor test exposure time specified.
[3]Colors shall conform to the color specification limits of ASTM D4956 after the outdoor test exposure time specified.
[4]ASTM D4956, Table 4.
[5]If outdoor weathering data is not available, artificial weathering according to ASTM D4956, Supplemental Requirement S3 may be used.
[6]ASTM D4956, Table 6.
[7]ASTM D4956, Table 7.
[8]Table 1015-3.

Reflective sheeting for signs, when processed, applied, and cleaned in accordance with the manufacturer's recommendations shall perform outdoors in accordance with the performance standards in Table 1015-5.

Table 1015-5
Reflective Sheeting Performance Standards

Type	Retroreflectivity[1] — Durability[2]				Colorfastness[3]
	Orange/ Fluorescent Orange		All colors, except Orange/Fluorescent Orange		
III	3 years	80[4]	10 years	80[4]	3 years
DOTD X	3 years	80[5]	10 years	80[5]	3 years

[1]Percent retained retroreflectivity of referenced table after installation and the field exposure time specified.

[2]All sheeting shall maintain its structural integrity, adhesion and functionality after installation and the field exposure time specified.

[3]All colors shall conform to the color specification limits of ASTM D4956 after installation and the field exposure time specified.

[4]ASTM D4956, Table 4.

[5]Table 1015-3.

1015.05.6 Temporary Signs, Barricades, Channelizing Devices, Drums and Cones: Reflective sheeting for temporary signs, barricades, and channelizing devices shall meet the requirements of ASTM D4956, Type III, except that temporary warning construction signs used on the mainline of freeways and expressways shall be fluorescent orange and meet the requirements of DOTD Type X.

Reflective sheeting for vertical panels shall meet the requirements of ASTM D4956, Type III.

Reflective sheeting for drums shall be a minimum of 6 inches (150 mm) wide and shall meet the requirements of ASTM D4956, Type III, and the Supplementary Requirement S2 for Reboundable Sheeting as specified in ASTM D4956. Reflective sheeting for traffic cone collars shall meet the requirements of ASTM D4956, Type III or Type VI.

1015.05.7 Sheeting Guaranty: The contractor shall provide the Department with a guaranty from the sheeting manufacturer stating that if the retroreflective sheeting fails to comply with the performance requirements of this subsection, the sheeting manufacturer shall do the following:

Table 1015-6
Manufacturer's Guaranty-Reflective Sheeting

Type	Manufacturer shall restore the sign face in its field location to its original effectiveness at no cost to the Department if failure occurs during the time period[1] as specified below		Manufacturer shall replace the sheeting required to restore the sign face to its original effectiveness at no cost to the Department if failure occurs during the time period[1] as specified below
	Orange/ Fluorescent Orange	All colors, except Orange/ Fluorescent Orange	All colors, except Orange/Fluorescent Orange
III	<3 years	<7 years	7 - 10 years
DOTD X	<3 years	<7 years	7 - 10 years

[1] From the date of sign installation.

Replacement sheeting for sign faces, material, and labor shall carry the unexpired guaranty of the sheeting for which it replaces.

The sign fabricator shall be responsible for dating all signs with the month and year of fabrication at the time of sign fabrication. This date shall constitute the start of the guaranty obligation period.

1015.06 NONREFLECTIVE SHEETING.

1015.06.1 General Requirements: Nonreflective sheeting film shall consist of an extensible, pigmented, weather-resistant plastic film. Face side of film shall be supported and protected by a paper liner which is readily removable after application without the necessity of soaking in water or other solvents. Colors shall match visually and be within the limits shown in Table 11 of ASTM D4956.

1015.06.2 Adhesive Requirements: Sheeting shall have a pre-coated pressure sensitive adhesive backing, which may be applied without additional coats on either sheeting or application surface. Adhesive shall comply with ASTM D4956, Class 1 (pressure sensitive).

1015.06.3 Physical Characteristics: The film shall be readily cut by normal fabricating methods without cracking, checking or flaking. Applied film shall be free from ragged edges, cracks, and blisters. The material shall have demonstrated its ability to withstand normal weathering without checking, cracking, or excessive color loss.

1015.07 SIGN ENAMELS, PAINTS, SILK SCREEN PASTE, AND OVERLAY FILM.

1015.07.1 Sign Enamels and Paints: These shall be applied in accordance with the sheeting manufacturer's recommendations. Final appearance as well as materials used shall be subject to approval.

1015.07.2 Silk Screen Paste: Silk screen paste shall be mixed at the factory, well ground to a uniform consistency and smooth texture, and shall be free from water and other foreign matter. It shall dry within 18 hours to a film that does not run, streak, or sag. Paste which has livered, hardened, or thickened in the container, or in which pigment has settled out so that it cannot be readily broken up with a paddle to a uniform usable consistency, will be rejected. Thinner shall be used in accordance with the sheeting manufacturer's recommendations.

Paste shall have proper pigmentation and consistency for use in silk screen equipment. The material shall produce the desired color and the same retroreflectivity values as required for reflective sheeting of the same type and color when applied on reflective sheeting background. Paste shall meet the quality and test requirements for appearance, coarse particles, and moisture and water resistance as specified for sign paints.

1015.07.3 Overlay Film: Transparent electronic cuttable overlay film shall produce the desired color and the same reflectivity values as required for reflective sheeting of the same type and color when applied on reflective sheeting background.

1015.08 TEMPORARY PAVEMENT MARKINGS.

1015.08.1 Temporary Tape: Temporary tape shall comply with ASTM D4592, Type I (removable) or Type II (non-removable) and shall be from the Approved Materials List.

1015.08.2 Painted Stripe: Paint shall be an approved traffic paint complying with 1015.12. Glass beads for drop-on application shall comply with 1015.13.

1015.08.3 Temporary Raised Pavement Markings for Asphalt Surface Treatment: Temporary raised pavement markers for asphalt surface treatment shall be flexible reflective tabs having a nominal width of 4 inches. The markers shall be yellow with amber reflective area on both sides. The body of the marker shall consist of a base and vertical wall made of polyurethane or other approved material and shall be capable of maintaining a reasonable vertical position after installation. The initial minimum Coefficient of Luminous Intensity at an entrance angle of -4

degrees and an observation angle of 0.2 degrees shall be 230 mcd/lx when measured in accordance with ASTM E810.

The reflective material shall be protected with an easily removable cover of heat resistant material capable of withstanding and protecting the reflective material from the application of asphalt at temperatures exceeding 325°F.

1015.09 RAISED PAVEMENT MARKERS. Markers shall be either non-reflectorized or reflectorized, as specified. Markers shall be from the Approved Materials List.

1015.09.1 Non-Reflectorized Markers:

1015.09.1.1 Description: Non-reflectorized markers shall consist of an acrylonitrile butadiene styrene polymer or other approved material, and shall be approximately 4 x 6-inches.

1015.09.1.2 Physical Requirements: Markers shall comply with the compressive strength requirements of ASTM D4280. The color shall be in accordance with the plans and the MUTCD.

1015.09.2 Reflectorized Markers: Reflectorized markers shall comply with ASTM D4280, Designation H and Designation F. The type and color shall be in accordance with the plans and the MUTCD. The markers shall be either standard having minimum base dimensions of 3 x 3-inches and a maximum height of 0.80 inches or low profile having minimum base dimensions of 3 x 2-inches and a maximum height of 0.60 inches.

1015.09.3 Adhesive:

1015.09.3.1 Epoxy Adhesive: Epoxy adhesive shall be Type I or II epoxy resin system complying with 1017.03.

1015.09.3.2 Bituminous Adhesive: The adhesive shall conform to ASTM D4280 (any type) for asphalt surfaces and D4280 Type II or Type III for concrete surfaces and shall be from the Approved Materials List.

1015.10 THERMOPLASTIC PAVEMENT MARKINGS.

1015.10.1 Description: This specification covers hot-sprayed, hot-extruded, and preformed thermoplastic compound for pavement markings on asphalt or portland cement concrete pavement. Thermoplastic marking material applied to asphalt surfaces shall consist of an alkyd based formulation. Thermoplastic marking material applied to portland cement concrete surfaces shall consist of an alkyd based formulation. Non-preformed material shall be manufactured so as to be applied by spray 40 mils thick or extrusion 90 mils thick or greater to pavement in molten form, with internal and surface application of glass spheres, and upon cooling to

normal pavement temperature, shall produce an adherent, reflectorized pavement marking of specified thickness and width, capable of resisting deformation. Preformed thermoplastic shall be a minimum of 125 mils thick prior to application. Black thermoplastic pavement markings shall require skid-resistant filler in lieu of glass beads.

For yellow thermoplastic material, the type and amount of yellow pigment shall be at the option of the manufacturer, providing all other requirements of this specification are met. However, the pigment for yellow thermoplastic shall be lead free and shall meet the regulatory level of non-hazardous waste as defined by 40 CFR § 261.24 when tested in accordance with EPA Method 1311, Toxicity Characteristics Leaching Procedures. The manufacturer shall provide certification that the material provided meets these requirements.

1015.10.2 Suitability for Application: Thermoplastic material shall be a product especially compounded for pavement markings. Markings shall maintain their original dimension and placement and shall not smear or spread under normal traffic at temperatures below 140°F. Markings shall have a uniform cross section. Glass beads shall be uniformly distributed to ensure that the full width of the line is visible at night. Pigment shall be evenly dispersed throughout the material thickness. The exposed surface shall be free from tack and shall not be slippery when wet. Material shall not lift from pavement in freezing weather. Cold ductility of material shall be such as to permit normal movement with the pavement surfaced without chipping or cracking.

1015.10.3 Standard (Flat) 90 mil or Greater Thermoplastic Pavement Markings: White and yellow thermoplastic shall be from the Approved Materials List and comply with AASHTO M 249 as modified herein. All other colors are not required to be from the Approved Materials List.

1015.10.3.1 Color:

1015.10.3.1.1 Laboratory Performance: The yellow thermoplastic shall comply with the requirements of Table 1015-7 when tested in accordance with ASTM E1349.

Table 1015-7
Color Specification Limits (Daytime)

Color	1		2		3		4	
	X	y	x	y	x	y	x	y
Yellow	0.4756	0.4517	0.4985	0.4779	0.5222	0.4542	0.4919	0.4354

(The four pairs of chromaticity coordinates determine the acceptable color in terms of the CIE 1931 Standard Colorimetric System measured with Standard 2° Observer and Standard Illuminant D65.)

1015.10.3.1.2 Field Performance: The Department may take initial daytime color and luminance factor (Y%) readings, as required by the engineer, within 7 to 30 days after installation to verify compliance with ASTM D6628.

1015.10.3.2 Whiteness Index: White thermoplastic shall have a minimum whiteness index of 40 when tested according to ASTM E313.

1015.10.3.3 Retroreflectivity: All retroreflectivity readings shall be measured with a geometry of 1.05 degrees observation angle and 88.76 degrees entrance angle as detailed in ASTM E1710.

For 90 mil thermoplastic, the initial retroreflectance for the in-place 4 inch lines marking shall have a minimum value of 375 mcd/lux/sq m for white and 250 mcd/lux/sq m for yellow. The Department may take readings on 4 inch lines before the expiration of the Guarantee Period in accordance with 104.05. Readings shall be at least 325 mcd/lux/sq m or greater for white and 200 mcd/lux/sq m or greater for yellow.

Only white and yellow markings require reflectivity testing.

In lieu of measurements, the engineer shall determine by visual nighttime inspection that stop bars, cross walks, chevrons, hash marks, legends and symbols have sufficient reflectance. For 8 inch lines for gores and turn lanes, the initial retroreflectance for the in-place marking shall meet 250 mcd/lux/sq m for white.

1015.10.4 Standard (Flat) 40 mil Thermoplastic Pavement Markings: Materials shall comply with AASHTO M 249 as modified herein. The meltdown temperature for all laboratory tests shall be 375°F ± 3°F.

1015.10.4.1 Composition: The material shall meet the following composition requirements:

	White	Yellow
Binder	25 percent minimum	25 percent minimum
Glass Spheres	30 percent minimum	30 percent minimum

% by weight

The intermixed glass spheres contained in the thermoplastic material shall conform to AASHTO M 247 Type I.

1015.10.4.2 Color:

1015.10.4.2.1 Laboratory Performance: The yellow thermoplastic shall comply with the requirements of Table 1015-7, "Color Specification Limits (Daytime)" when tested in accordance with ASTM E1349.

1015.10.4.2.2 Field Performance: The Department may take initial daytime color and luminance factor (Y%) readings, as required by the engineer, within 7 to 30 days after installation to verify compliance with ASTM D6628.

1015.10.4.3 Softening Point: After heating the marking compound for 4 hours ± 5 min. at 375°F ± 3°F and testing in accordance with ASTM E28, the material shall have a minimum softening point of 190°F as measured by the ring and ball method.

1015.10.4.4 Indentation Resistance: The material, when tested in accordance with ASTM D2240, Shore Durometer, A2, shall not exceed 40 when tested at 115°F ± 3°F.

1015.10.4.5 Retroreflectivity: All retroreflectivity readings shall be measured with a geometry of 1.05 degrees observation angle and 88.76 degrees entrance angle as detailed in ASTM E1710.

For 40 mil thermoplastic, initial retroreflectance for the in-place marking shall have a minimum of 250 mcd/lux/sq m for white and 175 mcd/lux/sq m for yellow. The Department may take readings before the expiration of the Guarantee Period in accordance with 104.5. Readings shall be at least 200 mcd/lux/sq m or greater for white and 125 mcd/lux/sq m or greater for yellow.

1015.10.5 Preformed Thermoplastic Pavement Markings

White and yellow preformed thermoplastic shall be from the Approved Materials List and comply with AASHTO M 249 as modified herein. All other colors are not required to be Approved Materials List products.

1015.10.5.1 Color

1015.10.5.1.1 Laboratory Performance: Yellow preformed thermoplastic shall comply with the requirements of ASTM D6628.

1015.10.5.1.2 Field Performance: The Department may take initial daytime color and luminance factor (Y%) readings, as required by the engineer, after 7 days and within 30 days after installation to verify compliance with ASTM D 6628.

1015.10.5.2 Softening Point: After heating the preformed thermoplastic material and testing in accordance with AASHTO T 250, the material shall have a minimum softening point of 200° F.

1015.10.5.3 Skid Resistance: Preformed thermoplastic markings shall have a minimum initial friction resistance number of 45 BPN when tested in accordance with ASTM E303.

1015.10.5.4 Retroreflectivity: All retroreflectivity readings shall be measured with a geometry of 1.05 degrees observation angle and 88.76 degrees entrance angle as detailed in ASTM E1710.

In lieu of measurements, the engineer shall determine by visual nighttime inspection that preformed thermoplastic pavement markings have sufficient reflectance.

1015.11 PREFORMED PLASTIC PAVEMENT MARKING TAPE.

1015.11.1 General: Preformed plastic pavement marking tape shall be from the Approved Materials List and shall comply with ASTM D4505 Retroreflectivity Level I or Level II, except as modified herein. The marking tape shall be Class 2 or 3. The type and color shall be in accordance with the plans and the MUTCD.

1015.11.2 Thickness: All preformed plastic pavement marking tape shall have a minimum overall thickness of 0.060 inches when tested without the adhesive.

1015.11.3 Friction Resistance: The surface of the Retroreflectivity Level II preformed plastic pavement marking tape shall provide a minimum friction resistance value of 35 British Polish Number (BPN) when tested according to ASTM E303. The surface of the Retroreflectivity Level I preformed plastic pavement marking tape shall provide a minimum friction resistance value of 45 BPN when tested according to ASTM E303. Friction values will be calculated for the Retroreflectivity Level I material with a raised surface pattern as defined in ASTM D4505 by averaging values taken at downweb and at a 45 degrees angle from downweb.

1015.11.4 Retroreflective Requirements: The preformed plastic pavement marking tape shall have the minimum initial specific luminance values shown in Table 1015-8 when measured in accordance with ASTM D4061.

Table 1015-8
Specific Luminance of Preformed Plastic Tape

Type	Observation Angle, degrees	Entrance Angle, degrees	Specific Luminance (mcd/sq m/lx)	
			White	Yellow
Retroreflectivity Level I	1.05	88.76	500	300
Retroreflectivity Level II	1.05	88.76	250	175

1015.11.5 Durability Requirements: The Retroreflectivity Level I preformed plastic pavement marking tape shall show no appreciable fading, lifting or shrinkage for at least 4 years after placement for longitudinal lines and at least 2 years after placement for symbols and legends.

The Retroreflectivity Level I preformed plastic pavement marking tape shall also retain the following reflectance values for the time period detailed in Table 1015-9.

Table 1015-9
Retained Specific Luminance for Retroreflectivity Level I Preformed Plastic Pavement Marking Tape

Time	Observation Angle, degrees	Entrance Angle, degrees	Specific Luminance (mcd/sq m/lx)	
			White	Yellow
1 year	1.05	88.76	400	240
4 years (2 years for symbols and legend)	1.05	88.76	100	100

1015.11.6 Plastic Pavement Marking Tape Guaranty (Retroreflectivity Level I): If the plastic pavement marking tape fails to comply with these performance and durability requirements within 4 years for Retroreflectivity Level I, the manufacturer shall replace the plastic pavement marking material at no cost to the Department.

1015.12 TRAFFIC PAINT. The contractor shall use water-borne traffic paint. Each paint container shall bear a label with the name and address of manufacturer, trade name or trademark, type of paint, number of gallons, batch number and date of manufacture.

Paints shall be from the Approved Materials List. Paints shall show no excessive settling, caking or increase in viscosity during 6 months of storage, and shall be a suitable consistency for standard spray gun application.

An infrared curve shall be generated in accordance with DOTD TR 610 and compared with the standard curve made during the initial qualification process.

For yellow paint material, the manufacturer shall determine the type and the amount of yellow pigment, providing the final product meets all of the requirements of this specification. However, the pigment for yellow paint shall be lead free and shall meet the regulatory level of non-hazardous waste as defined by 40 CFR § 261.24 when tested in accordance with EPA Method 1311, Toxicity Characteristics Leaching Procedures. The manufacturer shall provide certification that the material provided meets these requirements.

1015.12.1 Water Borne Traffic Paint: This material shall be a rapid setting waterborne compound suitable for use with hot application equipment. The paint shall contain Dow Fastrack HD-21A, Arkema DT-400 acrylic emulsion, or approved equal. The material shall meet the requirements of Table 1015-10 and Table 1015-11.

Table 1015-10
Water Borne Traffic Paint Physical Properties

Property	Test Method	Requirements Min.	Requirements Max.
pH	ASTM E70	9.9	—
Viscosity, at 25°C Krebs Unit	ASTM D562	78	95
Drying Time, minutes[1]	ASTM D711	—	10
Total Solids, % by mass	ASTM D2369	73	79
Percent Pigment[2]	ASTM D3723	55	62
Non-volatiles in Vehicle, % by weight	ASTM D215	43	—
Weight per Gallon, lb/gal	ASTM D1475	—	—
White		13.7	—
Yellow		13.1	—
Daylight Reflectance, %	ASTM E1349		
White		80	—
Yellow		50	—
Fineness of Grind	ASTM D1210	3	—
Color	[3]	Pass	
Shelf Life, months		12	—
Pigment Composition	[4]	Pass	
Infrared Spectroscopy (IR)	DOTD TR 610	Pass	

[1]Drying time to no track - Paint applied at 15 mils (375 µm) wet on the road surface with paint heated to 120-150°F (50-65°C) shall not show tracking when a standard size automobile crosses in a passing maneuver at 3 minutes.

[2] Do not apply any theoretical empirical factors in determining the percent of the paint. Do not calculate percent pigment by adding back the burned-off organic constituents of the pigment.

[3]Color (without glass beads) - Yellow paint shall comply with the requirements of Table 1015-11 when tested in accordance with ASTM E1349. White shall be a clean, bright, untinted binder.

[4]The white paint shall contain a minimum of 1.0 pound per gallon (120 g/L) of rutile titanium dioxide (Ti02) as determined using DOTD TR 523. The rutile titanium dioxide shall comply with ASTM D476.

Table 1015-11
Water Borne Traffic Paint Color Specification Limits (Daytime)

Color	1		2		3		4	
	x	y	x	y	x	y	x	y
Yellow	0.493	0.473	0.518	0.464	0.486	0.428	0.469	0.452

(The four pairs of chromaticity coordinates determine the acceptable color in terms of the CIE 1931 Standard Colorimetric System measured with Standard 2° Observer and Standard Illuminant D65.)

1015.12.2 Initial Retroreflectivity: All retroreflectivity readings shall be measured with a geometry of 1.05 degrees observation angle and 88.76 degrees entrance angle as detailed in ASTM E1710.

For traffic paint, initial retroreflectance shall have a minimum of 250 mcd/lux/sq m for white and 175 mcd/lux/sq m for yellow. Glass beads shall be uniformly distributed to ensure that the full width of the line is visible at night.

1015.12.3 Initial Daytime Color and Luminance Factor: For traffic paint, test the initial daytime color and luminance factor (Y%) according to ASTM D6628. The Department may take readings 7 to 30 days after installation to verify compliance with ASTM D6628.

1015.13 GLASS BEADS FOR PAVEMENT MARKINGS. Glass beads for use with painted traffic striping and flat thermoplastic striping shall conform to the specification requirements of AASHTO M 247, as modified herein.

1015.13.1 Moisture Resistance - Flow Characteristics: The beads shall not absorb moisture in storage. They shall remain free of clusters and lumps and shall flow freely from the dispensing equipment.

1015.13.2 Gradation: Glass beads shall meet the gradation requirements of AASHTO M 247 for the specified Type, when tested in accordance with ASTM D1214.

1015.13.2.1 Painted Traffic Striping: Glass beads for permanent painted traffic striping shall meet the gradation requirements of AASHTO M 247 Type 3. For temporary painted traffic striping, the contractor may determine which beads to use provided the line is reflective for the expected line life. Table 1015-12, "Gradation of 1.9 Refractive Index Glass Beads" may be used as an alternate on chip seal.

Table 1015-12
Gradation of 1.9 Refractive Index Glass Beads

U.S. SIEVE (METRIC SIEVE)	PERCENT PASSING
No. 18 (1.00 mm)	95-100
No. 20 (850 µm)	85-95
No. 30 (600 µm)	40-85
No. 40 (425 µm)	20-45
No. 50 (300 µm)	0-5

1015.13.2.2 Flat Profile Thermoplastic Striping: Drop-on beads for flat profile thermoplastic striping shall meet the gradation requirements of Table 1015-13 as determined by the thickness of the striping specified.

Table 1015-13
Types of AASHTO M 247 Glass Beads used for Flat Profile Thermoplastic Striping[1]

THICKNESS	NUMBER OF BEAD DROPS	APPLICATION #1	APPLICATION #2
40 mil spray	Single Drop	AASHTO M247 Type 2 or Table 1015-12 or contractors discretion[2]	Not required
90 mils or greater	Double Drop	AASHTO M247 Type 4	AASHTO M 247 Type 1 or Table 1015-12 or Contractors discretion[2]

1. Materials not designated in AASHTO M 247 require approval from the engineer.
2. Materials used at the contactors discretion shall meet the retroreflectance requirements.

1015.13.3 Roundness: Beads shall have a minimum of 75 percent true spheres when tested according to ASTM D1155, Method A. AASHTO M247 Type 3 and 4 beads shall have a minimum of 80 percent true spheres when tested by ASTM D1155, Method A.

1015.13.4 Angular Particles: The beads shall have no more than 3 percent angular particles per screen.

1015.13.5 Refractive Index: The beads shall have a minimum refractive index of 1.50 when tested by the liquid immersion method. Beads conforming to Table 1015-12 shall have a minimum refractive index of 1.90.

1015.13.6 Glass Bead Coating: All beads except Type 1 shall be coated with an adhesion assuring coating when tested in accordance with AASHTO M 247. The smaller AASHTO M 247 Type 1 beads shall also be coated to provide free flowing characteristics when tested in accordance with AASHTO M 247.

1015.13.7 Packaging and Marking: The beads shall be packaged in moisture proofed containers. Each container shall be stamped with the following information: Name and address of manufacturer, shipping point, trademark or name, the wording "Embedment Coated Glass Beads," type, weight, lot number and the month and year of manufacture.

1015.13.8 Heavy Metal Limits: Glass beads shall not contain more than 75 parts per million of inorganic arsenic when tested using EPA Method 6010B in conjunction with EPA Method 3052 for sample preparation.

Section 1016
Concrete Pipe and Precast Reinforced Concrete Drainage Units

1016.01 CONCRETE PIPE AND PRECAST DRAINAGE UNITS. Concrete drainage units include box culverts, three-sided structures, manholes, junction boxes, catch basins, and safety ends. Use concrete pipe and precast drainage units that are on the Approved Materials List and are from Certified Plants. All shop drawings must be approved by the Project Engineer before fabrication can begin.

Cementitious materials shall comply with Section 1001. Substitutions for cement are allowed in accordance with 901.07. Admixtures shall comply with 1011.02, except that chloride-type accelerators are not allowed. Class A1 concrete shall comply with Section 901. The addition of synthetic fibers will only be allowed upon approval of the Construction Fabrication Engineer.

1016.01.1 Joint Systems and Gaskets: Joint systems shall comply with 1018.03. A Type 2 or 3 joint system may be substituted for a Type 1 joint system; a Type 3 joint system may be substituted for a Type 2 joint system. Use gaskets from the Approved Materials List.

Rubber gaskets for pipe joints shall comply with ASTM C443. Each rubber gasket shall be identified with a batch or lot number.

Flexible sealants for pipe joints shall comply with ASTM C990.

1016.01.2 Curing: Concrete pipe and box culverts shall be cured by one of the methods listed in ASTM C76 or ASTM C1577, as applicable. No other combination or methods will be allowed.

Precast manholes, catch basins, junction boxes, and safety ends shall be cured in accordance with 805.06 or 805.09.4.

For curing concrete three-sided structures that are wet-cast products, keep forms in place for one curing day in accordance with 805.07. When structures are manufactured using the dry-cast method, follow curing procedures in ASTM C1504.

1016.01.3 Lots: A lot is one day's production.

1016.01.4 Compressive Strength: Compressive strength shall comply with the applicable ASTM specification for the product.

For each lot, five compressive strength cylinders shall be made and field-cured in accordance with DOTD TR 227 and broken in accordance with DOTD TR 230. The ASTM C497 core test may be used in lieu of cylinder tests, with approval of the Construction Fabrication Engineer. For pipe, the

ASTM C497 three-edge bearing test (3EB) may be used in lieu of cylinders. The Department reserves the right to have any concrete pipe tested at no cost to the Department to ultimate load using 3EB. The 3EB test is required yearly to retain plant certification.

Compressive strength must be verified by cylinders, cores or 3EB before shipping.

1016.01.5 Precast Unit Markings: Identifying information shall be indented into the concrete or painted thereon with waterproof paint on each unit on the inside and outside of the unit in such a manner as to be legible at time of delivery. Information shall include the name or trademark of the manufacturer, the date of casting, and the structure number or the station number as shown on the plans.

1016.01.6 Pipe Connections to Precast Units: For concrete pipe connections, use resilient connectors conforming to ASTM C923 or use grout connection. For grout connections each opening shall be 4±1/2 inches larger than the outside diameter of the pipe for which it is provided.

For connecting plastic and metal pipe to precast units use resilient connectors conforming to ASTM C923.

1016.02 REINFORCED CONCRETE PIPE (RCP). Comply with ASTM C76, amended as follows:

1. Unless otherwise specified, use Class III, Wall A, B, or C pipe.
2. When extra strength pipe is required, use either Class IV or Class V as specified. Use Wall A, B, or C.
3. For pipe sizes not included in ASTM C76, the area of reinforcement shall be designed in accordance with ASTM C655. Provide fabrication drawings and design calculations reflecting compliance with these specifications prior to pipe fabrication.
4. If allowed, modified designs require review and approval from the DOTD Hydraulics and Construction Fabrication Units. Minor modifications to facilitate fabrication processes may be used with the Construction Fabrication Engineer's approval.

1016.03 REINFORCED CONCRETE PIPE ARCH, (RCPA). Comply with ASTM C506, amended as follows:

1. Unless otherwise specified, use Class III pipe arch.
2. For pipe arch sizes not included in ASTM C506, the area of reinforcement shall be designed in accordance with ASTM C655. Provide fabrication drawings and design calculations reflecting compliance with these specifications prior to pipe fabrication.

3. If allowed**,** modified designs require review and approval from the DOTD Hydraulics and Construction Fabrication Units. Minor modifications to facilitate fabrication processes may be used with the Construction Fabrication Engineer's approval.

1016.04 PRECAST REINFORCED CONCRETE BOX CULVERTS. Comply with ASTM C1577 amended as follows:

1. Use Table 1.
2. Provide concrete with a Surface Resistivity at 28 days of 22 (kΩ-cm).
3. If allowed, modified designs require review and approval from the DOTD Hydraulics and Construction Fabrication Units. Minor modifications to facilitate fabrication processes may be used with the Construction Fabrication Engineer's approval.
4. When approved, minor surface cavities or irregularities which do not impair the service value of the unit and which can be corrected without marring its appearance shall be pointed with patching material from the Approved Materials List as soon as forms are removed.

1016.05 CONCRETE THREE-SIDED STRUCTURES. Comply with ASTM C1504.

1016.06 PRECAST REINFORCED CONCRETE MANHOLES, CATCH BASINS, JUNCTION BOXES, AND SAFETY ENDS. Comply with the dimensions shown on the plans, and the following:

Circular precast concrete manholes shall comply with ASTM C478, except that Class A1 concrete shall be used.

Square or rectangular precast concrete catch basins, junction boxes and drain manholes shall comply with ASTM C858, except that Class A1 concrete shall be used.

Precast safety ends shall comply with 702.04.3.

Portland cement concrete shall attain a minimum compressive strength of 4500 psi before shipping of the units.

Castings for frames, grates and covers shall comply with 1013.05 for steel and shall comply with 1013.06 for gray iron or malleable iron castings. Galvanization shall conform to ASTM A123.

1016.06.1 Casting Concrete: When multiple castings are to be made using the same forms, the use of metal non-panel forms are required. Concrete shall be placed into each sectional unit without interruption and shall be consolidated to force the concrete into the corners of forms and prevent formation of stone pockets or cleavage planes.

1016.06.2 Reinforcement: Reinforcement shall be as shown on the plans, and shall not vary more than 1/4 inch from the positions shown, except at pipe connections. Cover on reinforcement shall not be less than that shown on the plans.

Section 1017
Epoxy Resin Systems

1017.01 GENERAL. This section covers the material requirements for Epoxy Resin Adhesives (General Use) and Epoxy Resin Adhesives (Traffic Markers).

For anchoring application, the epoxy resin systems shall comply with ASTM C881 (with the exception of the gel time requirement) and ICC-ES AC 308. For crack injection, the minimum gel time shall be 15 minutes.

1017.02 EPOXY RESIN ADHESIVES (GENERAL USE).

1017.02.1 General: Epoxy Resin Adhesives shall comply with AASHTO M 235 (ASTM C881) and the additional requirements of Table 1017-1. Use two component systems in accordance with the manufacturer's recommendations. Epoxy resin adhesives shall be from the Approved Materials List.

1017.02.2 Classifications: Epoxy Resin Adhesives shall be classified by Type, Grade and Class.

1017.02.2.1 Types:

1. *Type I*- Use in non-load-bearing application for bonding hardened concrete to hardened concrete and other materials, and as a binder in epoxy mortars or epoxy concretes.
2. *Type II*- Use in non-load-bearing applications for bonding freshly mixed concrete to hardened concrete.
3. *Type III*- Use in bonding skid-resistant materials to hardened concrete, and as a binder in epoxy mortars or epoxy concretes used on traffic-bearing surfaces (or surfaces subject to thermal or mechanical movements).
4. *Type IV*- Use in load-bearing applications for bonding hardened concrete to hardened concrete and other materials and as a binder for epoxy mortars and concretes.
5. *Type V*- Use in load-bearing applications for bonding freshly mixed concrete to hardened concrete.
6. *Type VI*- Use for bonding and sealing segmental precast elements, as in segment-by-segment erection and for span-by-span erection when temporary post tensioning is applied.
7. *Type VII*- Use as a non-stress-carrying sealer for segmental precast elements when temporary post tensioning is not applied, as in span-by-span erection.

Note 1—Epoxy resin systems will adhere to a wide variety of materials, including wood, metals, masonry, and most plastics. Polyethylene, TFE-fluorocarbon, cellophane, and greased or waxed surfaces are among the few materials to which these systems will not adhere.

1017.02.2.2 Grades: Three grades of systems are defined according to their flow characteristics and are distinguished by the viscosity and consistency requirements of AASHTO M 235, Table 1.

Grade 1 - Low viscosity.

Grade 2 - Medium viscosity.

Grade 3 - Non-sagging consistency.

1017.02.2.3 Classes: Classes A, B, and C are defined for Types I through V, and Classes D, E, and F are defined for Types VI and VII, in accordance with the range of temperatures for which they are suitable.

Class A - Use below 40°F (4°C), with the lowest allowable temperature to be defined by the manufacturer of the product.

Class B - Use between 40 and 60°F (4 and 15°C).

Class C - Use above 60°F (15°C), with the highest allowable temperature to be defined by the manufacturer of the product.

Class D - Use between 40 and 65°F (4 and 18°C) for Type VI and VII applications.

Class E - Use between 60 and 80°F (15 and 30°C) for Type VI and VII applications.

Class F - Use above 75°F (25°C) for Type VI and VII applications, with the highest allowable temperature to be defined by the manufacturer of the product.

Table 1017-1
Epoxy Resin Adhesives

		Type I		Type II		Type III		Type IV		Type V		Type VI & Type VII	
Property	Test Method	Min.	Max.	Min.	Max.	Min.	Max.	Min.	Max.	Min.	Max.	Min.	Max.
Compressive Strength, 24 hr, psi (MPa)	DOTD TR 705	5000 (34)	—	—	—	3000 (20)	—	5000 (34)	—	—	—	—	—
Tensile Bond Strength, psi (MPa)	DOTD TR 706												
24 hours (dry cure)		350 (2.4)	—	—	—	250 (1.7)	—	350 (2.4)	—	—	—	—	—
72 hours (moist cure)		—	—	150 (1.0)	—	—	—	—	—	150 (1.0)	—	—	—

1017.03 EPOXY RESIN ADHESIVES (TRAFFIC MARKERS).

1017.03.1 General: Epoxy Resin Adhesives for bonding traffic markers shall comply with AASHTO M 237, Type I and Type II, and the requirements of Table 1017-2. Use two component systems in accordance with the manufacturer's recommendations. Use epoxy resin adhesives from the Approved Materials List.

1017.03.2 Classifications: Epoxy Resin Adhesives shall be classified by Types.

1017.03.2.1 *Types:*

Type I-Rapid Setting, High Viscosity, Epoxy Adhesive. This type of adhesive provides rapid adherence of traffic markers to the surface of the pavement.

Type II-Standard Setting, High Viscosity, Epoxy Adhesive. This type of adhesive is recommended for adherence of traffic markers to pavement surfaces when rapid set is not required.

Table 1017-2
Epoxy Resin Adhesives for Bonding Traffic Markers

		Type I Rapid		Type II Standard	
Property	Test Method	Min.	Max.	Min.	Max.
Consistency: Component A (Resin) TD Spindle at 5 RPM, poises (Pa·s)	AASHTO T 237	1000 (100)	3500 (350)	1000 (100)	3500 (350)
Component B (Hardener) TD Spindle at 5 RPM, poises (Pa·s)		1000 (100)	3500 (350)	1000 (100)	3500 (350)
Shear Ratio (each component)		2.0	—	2.0	—
Gel Time, Minutes[1]	AASHTO T 237	6	10	6	10
Tensile Bond Strength to reach 170 psi (1.17 kPa), minutes	AASHTO T 237	—	40	—	210
Diagonal Shear Bond Strength 24 hour, psi (MPa)	AASHTO T 237	1000 (7.0)	—	2000 (14.0)	—
24 hour, plus 7 day water soak, psi (MPa)		800 (5.5)	—	1500 (10.0)	—

[1]The gel time for mixtures that are mixed and dispensed by hand shall be a minimum of 7 minutes to a maximum of 13 minutes.

Section 1018
Miscellaneous Materials

1018.01 WATER. Water shall be suitable for human consumption or shall comply with the following when tested in accordance with AASHTO T 26:

	Percent by Weight (Max.)
Alkali	0.1
Solids (Organic)	0.1
Solids (Inorganic)	0.4
Salt (NaCl)	0.5
Sugar, Oil, or Acid	0.0

1018.02 LIME. For hydrated lime and quicklime, use products from the Approved Materials List. Comply with AASHTO M 216 with the following exceptions:

1. Maximum free moisture shall be 1.50 percent for hydrated lime.
2. Quicklime shall contain no more than 8 percent MgO by weight of total material. The quicklime shall be protected from contact with moisture prior to testing, and shall be free flowing and graded so that 100 percent will pass a 3/8 inch sieve. When the quicklime is to be used in slurry, a minimum of 95 percent shall pass the 3/4 inch sieve.

1018.03 JOINT SYSTEMS FOR PIPE AND PRECAST CONCRETE DRAINAGE UNITS.

1018.03.1 General: All pipe joint systems and materials shall be approved by the Materials Engineer Administrator. For source approval on all pipes exceeding 12 inches in diameter and for all concrete drainage units, joint types are determined by hydrostatic joint testing in accordance with Table 1018-1, with the modifications of 1018.03.2

Table 1018-1
Joint Type Determination

Type of Pipe	Test Method
Concrete Pipe and Drainage Units	ASTM C443
Metal Pipe	AASHTO M 36
Plastic Pipe - CPEPDW	AASHTO M 294
Plastic Pipe - PVCP	AASHTO M 278 or ASTM D3034
Plastic Pipe - RPVCP	ASTM F794 or ASTM F949

1018.03.2 Testing: Using water as the pressure medium and starting with a straight pipe joint alignment, pipe is tested in horizontal alignment, and manholes in vertical alignment. The evaluation may be performed as a continuous test rather than considering each level individually.

1018.03.2.1 Type 1 Joints (T1): Type 1 pipe joints shall be soil tight and shall not leak when the pipe joint assembly is filled with water.

1018.03.2.2 Type 2 Joints (T2): Type 2 pipe joints shall not leak when subjected to 5 psi hydrostatic pressure for 10 minutes.

1018.03.2.3 Type 3 Joints (T3): Type 3 pipe joints shall not leak when subjected to 10 psi hydrostatic pressure for 10 minutes. Also, concrete pipe shall not leak when then deflected to create a position 1/2 inch wider than the assembled position on one side and subjected to hydrostatic pressure for an additional 10 minutes. Flexible pipe shall not leak when then deflected by 5 percent of the original diameter and subjected to 10 psi hydrostatic pressure for an additional 10 minutes.

1018.04 NON-SHRINK GROUT. Non-shrink grout shall comply with ASTM C1107 and shall be from the Approved Materials List.

1018.05 HARDWARE CLOTH. Hardware cloth shall comply with the requirements of ASTM A740, shall have a minimum wire diameter of 0.041 inch, and shall be constructed of 1/2 inch x 1/2 inch mesh galvanized in accordance with ASTM A153.

1018.06 FORM RELEASE AGENT. Form release agent for concrete shall be from the Approved Materials List.

1018.07 SACKS FOR SACKED CONCRETE REVETMENT. Sacks for sacked concrete revetment shall be suitable new burlap bags. Burlap shall comply with AASHTO M 182.

1018.08 CONCRETE ANCHOR SYSTEMS. Concrete anchor systems shall consist of mechanical anchor devices, epoxy systems or other approved methods for anchoring fasteners to hardened concrete. Use systems from the Approved Materials List.

1018.09 ROOFING PITCH. Comply with ASTM D4586.

1018.10 MIX RELEASE AGENT FOR ASPHALT CONCRETE. Mix release agent for asphalt concrete shall be from the Approved Materials List. Do not use diesel as a mix release agent.

1018.11 ELECTRICAL CONDUIT AND CONDUCTORS. Rigid metal electrical conduit shall comply with ANSI C 80.1 or ANSI C 80.5.

Electrical conductors shall comply with IPCEA Publication No. S-19-81, IPCEA Publication S-66-524, and IPCEA Publication S-61-402.

1018.12 MASONRY UNITS.

1018.12.1 Sewer Brick: Sewer brick shall be made from clay, shale or concrete.

Brick made from clay or shale for use in junction boxes, catch basins, arches, manholes and for backings shall comply with AASHTO M 91, Manhole Brick, Grade MM.

Concrete brick shall comply with ASTM C139, except that the minimum thickness of each unit shall not be less than 3 5/8 inches.

1018.12.2 Building Brick:

1. Building brick made from clay or shale for use in brick masonry shall comply with ASTM C62, Grade SW.
2. Concrete building brick for use in masonry buildings shall comply with ASTM C55.

1018.12.3 Concrete Building Block: Concrete hollow load-bearing building block shall comply with ASTM C90.

1018.12.4 Cellular Concrete Blocks: Cellular concrete blocks shall be manufactured by machines employing high vibratory compaction. The blocks shall comply with ASTM C90, except the oven-dry weight of concrete shall be at least 130 pounds per cubic foot based on bulk specific gravity. Permissible block dimension variations will be as directed.

1018.13 BARRICADE WARNING LIGHTS.

1018.13.1 General: Unless otherwise designated in the plans, barricade warning lights shall be Type A/C (switchable combination low-intensity flashing and steady burn), Type B (high-intensity flashing), or Type D (360-degree steady burn), and all bulbs shall be LED-type. Barricade warning lights shall be from the Approved Materials List, and comply with the MUTCD.

These lights are not for warning gates or barriers for moveable bridges.

1018.13.2 Markings: Each light submitted for approval and each light placed on a project shall have a permanently attached identification plate or other permanent markings with the following information:

1. Manufacturer's name
2. Model number
3. Type
4. Lens manufacturer and identification number
5. Circuit manufacturer and identification number
6. Bulb number
7. Minimum operating voltage required to conform to minimum intensity requirements
8. Year of manufacture

1018.13.3 Certification: Prior to installation, furnish the engineer with the following information:

1. Material certification (Certificate of Compliance)
2. Proposed number of warning lights to be used
3. Type
4. Trade name
5. Manufacturer's name and model number

The certification shall also state that each light assembly has been tested, is functioning properly and will be maintained in satisfactory working order.

1018.14 ELASTOMERIC BRIDGE BEARING PADS.

1018.14.1 General: Elastomeric bridge bearing pads shall be either plain, consisting of elastomer only, or laminated, consisting of layers of elastomer separated by non-elastic laminates. The elastomer portion of the compound used for bearings shall be 100 percent virgin chloroprene stock. Natural rubber, vulcanized rubber (natural or synthetic) or other synthetic rubber-like materials will not be acceptable.

Non-elastic laminates shall be a nominal 1/16 inch thickness rolled steel sheets with a minimum yield strength of 33,000 psi.

Elastomeric bridge bearing pads shall be from the Approved Materials List.

1018.14.2 Physical Properties of Elastomer: The elastomer compound for plain and laminated bearings shall be a virgin, low temperature Grade 2, polychloroprene complying with AASHTO M 251. In addition, the pad shall comply with acceptance criteria of AASHTO M251, except that the sample quantity shall be one per lot, and the lot size shall be no more than 100 pads. All tests shall be made on the finished product. Special molded or prepared specimens, where required, shall comply with the specimen preparation requirements of the test involved.

For laminated bearings, each bearing shall be subjected to an average compression test loading of 1,500 psi by the manufacturer. The performance of each bearing will be considered satisfactory if there is no visible evidence of bond failure or other damage to the bearing because of this loading. The Department may verify that pads meet this requirement by means of random testing.

1018.14.3 Manufacturing Requirements: Components of laminated bearing pads shall be molded into an integral unit. Edges of the nonelastic laminations shall be covered by a minimum of 1/8 inch of elastomer. The laminates shall be parallel with the bottom surface of the bearing, subject to the tolerances that follow.

The preparation of elastomer compound prior to placement in the mold shall be such as to result in a homogeneous, finished bearing pad free of voids, blisters, cracks, folds, cuts, non-fills and any appearance of layers or ply separation on the surface or within the pad. Plain bearing pads may be molded individually or cut to length from previously molded strips or slabs. No pads shall be formed from the lamination of previously cured sheets or slabs. Finish of cut surfaces shall be at least as smooth as ANSI No. 250 finish.

Each bearing pad shall be marked with the manufacturer's identification number in such manner as to remain legible until the bearing pad is placed in the structure. This number shall identify the batch from which it was produced. A batch is defined as the quantity of compound produced from each separate mixture of ingredients.

1018.14.4 Appearance and Dimensions: The flash tolerance and appearance shall comply with Drawing RMA F3-T.063 of the RMA Rubber Products Handbook as published by the Rubber Manufacturers Association, Inc.

For both plain and laminated bearings, the permissible variations from specified dimensions and configuration shall be in accordance with AASHTO M 251.

	Tolerance Inches
Variation from Plane Parallel to Theoretical Surface	
Individual Nonelastic Laminates (determined by measurements at edges of bearing)	±1/8
Thickness of Nonelastic Laminates	-0, +1/16

1018.14.5 Certification: Prior to installation, furnish the Materials Engineer Administrator with a notarized material Certificate of Analysis and a list showing:

1. Proposed number of laminated bearing pads to be used itemized by type and size.
2. Manufacturer's name and identification number.
3. State project number.

The certification shall also state that each bearing pad shipped has been load tested and found to comply with these requirements. It shall also state that the steel laminates in each laminated pad are aligned as required in 1018.14.4.

1018.15 SILT FENCING, EROSION CONTROL MATTING, AND HARDWARE.

1018.15.1 Silt Fencing: Silt fencing shall be either wire-supported or self-supported.

1018.15.1.1 Wire-Supported Silt Fencing: Wire-supported silt fencing shall consist of standard woven livestock wire, and minimum of 14-gage wire, a minimum of 36 inches in height with a maximum wire spacing of 6 inches. Posts shall be either wood or steel installed a minimum of 2 feet in the ground. Filter material shall be burlap weighing approximately 7 1/2 ounces per square yard, approved jute fabric or approved geotextile fabric. Geotextile fabric shall comply with Section 1019, Class F.

1018.15.1.2 Self-Supported Silt Fencing: Self-supported silt fencing shall consist of an approved geotextile fabric suitably attached to posts of either wood or steel installed in accordance with plan details. Geotextile fabric shall comply with Section 1019, Class G.

1018.15.2 Erosion Control Matting, and Hardware: Erosion control systems shall consist of approved hydraulically applied fiber mulch

systems, or rolled erosion control products (mats) including hardware and installation plan.

Use erosion control systems from the Approved Materials List. Comply with the performance requirements in Table 1018-2 when evaluated in accordance with the Department's Qualification Procedure for erosion control systems.

Table 1018-2
Erosion Control Systems

Slope Protection			
Type[1]	Test Site Conditions for Evaluations	Maximum Sediment Loss, lb/100 ft^2	Minimum Vegetation Density, %
A	3:1 Slope	7.89	80
B	2:1 Slope	7.89	80
Flexible Channel Liners			
Type[1]	Test Site Conditions for Evaluation	Maximum Average Sediment Loss, lb/100 ft^2	Minimum Vegetation Density, %
C	Shear Stress Range 0 to 2 psf	350	70
D	Shear Stress Range 0 to 4 psf	500	70
E	Shear Stress Range 0 to 6 psf	620	70
F	Shear Stress Range 0 to 8 psf	800	70

[1]Types are listed in increased order of protection within each category.

The manufacturer's installation plan shall include a description of all hardware and shall comply with the installation procedure used during the evaluation of source approval. Furnish a copy of the approved installation plan with each shipment.

Section 1019
Geotextile Fabric and Geocomposite Systems

1019.01 GEOTEXTILE FABRIC.

1019.01.1 General Requirements: The geotextile fabric shall be composed of at least 85 percent by weight of polyolefins, polyesters, or polyamides. The geotextile fabric shall be resistant to chemical attack, rot and mildew and shall have no tears or defects which adversely alter its physical properties. When required, the geotextile fabric shall contain stabilizers and/or inhibitors added to the base material to make filaments resistant to deterioration due to ultraviolet and heat exposure. Edges of geotextile fabric shall be finished to prevent the outer yarn from pulling away from the fabric. Fibers of other composition may be woven into the geotextile fabric for reinforcing purposes. Durability of these fibers shall be equivalent to that of the geotextile fabric.

Geotextile fabric rolls shall be furnished with an opaque, waterproof wrapping for protection against moisture and extended ultraviolet exposure prior to placement. Each roll shall be labeled or tagged with the manufacturer's name, date of manufacture, batch number, and name of product.

Unless otherwise specified on the plans or in the project specifications, the geotextile fabric shall be from the Approved Materials List.

1019.01.2 Detailed Requirements The geotextile fabric shall comply with the requirements in Table 1019-1 and utilized as follows unless otherwise specified:

Use	Classes
1. Drainage:	
Underdrains	A, B, C or D
Pipe and Precast Manhole Joints	A, B, C or D
Weep Holes	A, B, C or D
Bedding Fabric	B, C, or D
Approach Slabs	B, C, or D
Fabric for Geocomposite Drainage Systems[1]	B, C, or D
2. Stabilization:	
Bulkheads	C or D
Flexible Revetments	C or D

Rip Rap	D
Railroad Crossings	D
Base Course	D
Subgrade Layer	D
Soil Stabilization	C, D, or S

3. Paving Fabric[2]: B or C (modified)

4. Silt Fencing:

Wire Supported	F
Self-Supported	G

[1]Refer to 1019.02 for additional requirements.
[2]Refer to 1019.03 for additional requirements.

Table 1019-1
Geotextile Fabrics

		Requirements Classes						
Property	Test Method	A	B	C	D	S	F	G
AOS, Metric Sieve, µm, Max.	ASTM D4751	300	300	300	212	600	850	850
Grab Tensile, N, Min.	ASTM D4632	330	400	580	800	800	400	400
% Elongation @ Failure, Min.	ASTM D4632	—	—	50	50	—	—	—
% Elongation @ 200 N, Max.	ASTM D4632	—	—	—	—	—	—	50
Burst Strength, N, Min.	ASTM D3787	440	620	930	1290	1390	—	—
Puncture, N, Min.	ASTM D4833	110	130	180	330	330	—	—
Trapezoid Tear Strength, N, Min.	ASTM D4533	110	130	180	220	220	—	—
Permittivity, $Sec.^{-1}$, Min.	ASTM D4491	1.0	1.0	1.0	1.0	0.2	0.01	0.01
Grab Tensile Strength Retained after weathering 150 h, UVA lamps, %, Min	ASTM D4632 ASTM G154	70	70	70	70	70	—	—
Grab Tensile Strength Retained after weathering 500 h, UVA lamps, %, Min	ASTM D4632 ASTM G154	—	—	—	—	—	70	70

1019.02 GEOCOMPOSITE DRAINAGE SYSTEMS. The geocomposite fabric drain shall consist of a nonwoven geotextile fabric and a core as specified below with the geotextile completely enveloping the core. Fittings shall be as recommended by the manufacturer. The geotextile fabric shall be sufficiently secured to the core to prevent separation of the geotextile fabric and intrusion of the backfill material during installation. The geocomposite drainage system shall be from the Approved Materials List.

1019.02.1 Geotextile Fabric: The fabric shall meet the requirements for Class B, C, or D geotextile fabric of 1019.01 with the following modifications:

Property	Test Method	Requirements
Elongation, %, Min.	ASTM D4632	20
Sewn Seam Strength (Fabric to Fabric), kN/m width, Min.	ASTM D4437	2600

1019.02.2 Cores for Wall Drains (Single Sided): The core shall be a flexible, solid-backed, rectangular design made of a polyolefin material not sensitive to moisture. The geocomposite design shall allow drainage of water from one side only. The core shall consist of supports having a minimum height of 5/16 inch upon which the fabric shall be securely fastened. The cross section open area of the core which will allow the passage of water shall be a minimum of 40 percent.

The core shall meet the following requirements:

Property	Test Method	Requirements
Compressive Strength, kPa @ 20% Max. Deflection, Min.	ASTM D1621	380

1019.03 PAVING FABRIC. In addition to the specifications for Class B or C geotextile fabric of 1019.01, the paving fabric shall also comply with the following requirements:

Property	Test Method	Requirements
Asphalt Retention, L/sq m	AASHTO M 288	0.9
Change in Area at 135°C, %, Max.	AASHTO M 288	15.0

Section 1020
Traffic Signals

1020.01 TRAFFIC SIGNAL HEADS.

1020.01.1 General Requirements: Traffic signal sections, beacon sections, and pedestrian signal sections shall be of the adjustable type. Materials and construction of each section shall be the same.

Signals shall be constructed with 12-inch lenses in accordance with the plans. Signal sections can be polycarbonate or aluminum. All signal sections, visors and associated brackets shall be black color. Aluminum sections shall be finished both inside and out with a thick, black powder coating or with two (2) coats of high grade black enamel. Each coat shall be independently baked to resist peeling and chipping. Edges shall be deburred and smooth with no sharp edges.

1020.01.2 Housing, Housing Doors, and Visors: Only Traffic Signal Heads on the Traffic Operations Approved Products List will be accepted.

1020.01.2.1 Optical Unit for Programmable Head: The optical unit shall include a light emitting diode (LED). The optical unit and visor shall be designed as a unit to eliminate the return of outside sunlight from entering the unit from above the horizontal (known as sun phantom). The optical unit shall be designed and assembled so that no light can escape from one indication to another.

1020.01.2.2 12-Inch LED Traffic Signal Module (Mast Arm and Span Wire Mount): Only 12-Inch LED Traffic Signal Lamp Units on the Traffic Operations Approved Products List will be accepted.

1020.01.3 Pedestrian Signals: Only LED Countdown Pedestrian Signal Heads (LED modules and housings) listed on the Traffic Operations Approved Products List will be accepted.

1020.01.4 Brackets: Brackets for the assembly of 2-way, 3-way, and 4-way signal sections shall have the center of the attachment points arranged on a 8-inch radius. Attachment to signal head shall be made with 1 1/2-inch conduit or 3-bolt type fittings with a bolt length 1 1/2 inches. Fittings at the center of the bracket shall have a removable lower plate for access to the wireway.

The bracket at the supported end of the signal section shall be 1 1/2-inch conduit for wiring and a fitting with cover for access to the wire-way. The bracket at the opposite end of the section may be either the same as the top or solid. A set screw engaging a drilled hole shall be provided at each joint

on the bracket where conduit type joints are used or an equivalent locking device shall be provided.

The attachment point for mounting on the bracket shall be a 2-inch opening. When slip-fit is used, the section shall come complete with the necessary nuts and washers for 1 1/2-inch conduit. Provisions shall be made for a positive lock to prevent accidental bracket rotation. Locking may be accomplished by means of serrations, detents, set screws, or similar devices. Friction locking will not be acceptable. An acceptable alternative to the 1 1/2-inch conduit will be a tri-stud type fitting with washer. Tri-stud length shall be 1 1/2 inches.

Unused openings of signal sections shall be closed with a standard waterproof plug for a 1 1/2-inch opening. The minimum length of the plug shall be 1 1/2-inches. The exposed portions of plugs shall be painted to match the color of the signal heads.

Carbon steel components shall be galvanized in accordance with ASTM A153.

Apply paint or powder coat to match the color of the signal heads.

1020.01.5 Signal Mounts: Signal sections and beacon sections shall be as shown on the plans and shall be suitable for one of the following standard mounts. The type mount for each will be specified in the plans.

1020.01.5.1 Support Cable Mount: Support cable mounted signals shall come with a disconnect hanger and clamp described in 1020.07. Signs shall be mounted with a Span Wire Sign Bracket approved on the Traffic Operation Approved Product List.

1020.01.5.2 Pedestal Mount: Pedestal mounts shall be furnished with a slip fitting for placement on a 4-inch inside diameter pipe pedestal having set screws for correct alignment of the signal. Provisions for the entrance of signal cables shall be incorporated into the design of the bracket assembly.

The bracket assembly shall incorporate a weatherproof terminal compartment or box with a removable cover allowing complete access. The box shall be a suitable size to accommodate, and shall come equipped with, a terminal strip with terminals equal to the number of signal indications in the signal heads plus one or more for common and for equipment ground. The terminal compartment shall be neat in appearance and shall be adjacent to or near the pedestal mount. In no case shall feed wires be required to pass through a signal section or face to reach the terminal compartment. A terminal compartment integral with the bracket will be permitted.

Apply paint or powder coat to match the color of the signal heads.

1020.01.5.3 Mast Arm Mount: This mount shall be furnished and installed. Only Signal Head Mast Arm Brackets on the Traffic Operations Approved Products List will be accepted. Signs shall be mounted with a Mast Arm Traffic Sign Mounting Bracket listed on the Traffic Operation Approved Product List.

1020.01.5.4 Side Mount: This mount shall be furnished for attaching brackets to vertical supports as shown on the plans. The bracket mounting hub shall accept 1 1/2-inch conduit and provide for a wire opening equivalent to a 1 1/2-inch condulet. For timber pole installation, the side mounts shall have a vertical entrance for 1-inch conduit.

Apply paint or powder coat to match the color of the signal heads.

1020.01.5.5 Flashing Beacon Signal Mount: The flashing beacon signal shall attach to the support cable by a bracket as shown on the plans. The bracket shall be provided with a cable entrance adapter with provisions for balancing and securing the signal.

Apply paint or powder coat to match the color of the signal heads.

1020.01.6 Backplates: Only backplates listed on the Traffic Operations Approved Products List will be accepted.

1020.01.7 Disconnect Hanger for Traffic Signal Head: The hanger shall provide a means for connecting and disconnecting the signal head electrically and mechanically from signal support cable and span wire without use of tools.

The hanger, with top and bottom attachments and clamps, shall not increase signal height from the span wire to the bottom of the signal by more than 6 inches.

Apply paint or powder coat to match the color of the signal heads.

The hanger shall be as shown on the plans and shall conform to the requirements of the clamp, housing and terminal block, plug, and adapter.

1020.01.7.1 Clamp: The clamp shall be capable of attaching to a 1/4-inch to 7/16-inch support cable and shall attach to or be integral with a balance adjusting device and a suitable weatherproof entrance for signal cable. The support cable clamp shall utilize a minimum of two “J” or “U” type bolts 3/8-inch or larger. A 5/8-inch clevis type suspension clamp shall be provided with a 5/8-inch diameter. The balance adjustor shall be suitable for mating with a clevis-type clamp having a horizontal clearance of 5/8 inch and pin of 5/8-inch. All steel shall be galvanized in accordance with ASTM A153.

1020.01.7.2 Housing: Only Traffic Signal Heads on the Traffic Operations Approved Products List will be accepted. The housing and accessories shall be high-strength aluminum alloy and shall be equipped with

a door of similar material. The door shall be held shut by a device operable with one hand without use of tools and shall not be easily removable. The door, when open, shall provide complete access to the interior of the housing and shall include a device to hold the door open while working inside the hanger if it will not remain open.

The housing shall be equipped with two or more weatherproofed openings for signal cable entrance. The openings shall be equipped with suitable bushings for cable protection. Cable entrances shall be capable of accommodating three signal cables 11/16-inch in diameter. The housing shall be provided with a permanently mounted clamping device to prevent the cable from twisting. The clamping device shall not damage the cable jacket, insulation, or break wires.

The housing shall be provided with a 3 1/2-inch-by-3 1/2-inch cast aluminum flange adaptor as shown on the plans for connecting to the signal head or bracket.

1020.01.7.3 Terminal Block and Plug: An easily accessible pressure type terminal block shall be located in the housing and shall accommodate from twelve or eighteen separate lines, as specified. Each terminal shall be permanently numbered for identification, shall accommodate a minimum of two AWG No. 12 conductors, and shall be sufficiently rugged to permit tightening for proper electrical connection without damaging the wire.

The terminal block shall be wired to a multi-circuit female jack connector mounted in the housing and aligned in accordance with the plans.

A minimum size No. 18 AWG wire, with 600-volt polyethylene or polyvinylchloride insulation, shall be used between the terminal strip and the jack connector. The numbered terminals on the terminal strip shall be wired to the corresponding numbered pin in the jack connector.

A suitable male plug with clamp for the corresponding female jack connector shall be furnished and shall be equipped with 4 feet of cabled leads for connection to the signal heads. Wire shall be No. 18 AWG, 600-volt polyethylene or polyvinylchloride insulated and neatly cabled.

1020.02 TRAFFIC DETECTORS AND ASSOCIATED EQUIPMENT.

1020.02.1 Loop Detectors: Detector units for signalized intersections are included as part of DOTD Traffic Control Standard 18A. Detector units required at remote vehicle detection locations shall comply with NEMA TS1, Section 15, with or without delay and extension timing as specified.

The two types of inductive detector units are specified are those with and those without the ability to delay and extend a call, NEMA Type 1 and Type 1T.

Detector units shall be suitable for accurate detection of vehicles from motorcycles to tractor-trailer combinations which ordinarily travel public streets and highways with sufficient conductive material, suitably located to permit recognition and response by the detector system.

Detector units shall also comply with NEMA TS1, Section 15.2.6.

1020.02.1.1 Size and Case: The amplifier case shall be constructed of rugged metallic material with a protective coating. A hand-tool-removable cover shall be provided to allow access to internal circuitry.

1020.02.1.2 Connectors, Switches, and Fuses: Switches, connectors, and fuses shall be located on the front of the unit.

1. Permanently label each switch to identify its function. Permanently label each position to identify its mode of operation. Each mode of operation shall be simple to program with one switch position assigned to each function.

2. Provide a single connector on the front of the unit to comply with NEMA TS1, Section 15.2.28.1. This connector shall mate with cable connections MS 3106A-18-1S.

3. Plug wiring shall be as follows.

PIN[1]	FUNCTION
Pin A	AC (-)
Pin B	Relay Common
Pin C	AC (+)
Pins D & E	Loop Leads
Pin F	Relay (N.O.)
Pin G	Relay (N.C.)
Pin H	Chassis Ground
Pin I	Spare
Pin J	Delay Override

[1]No pins shall be used for any other purpose than those listed above.

4. Permanently label fuse holders to identify the size of the fuse.

1020.02.1.3 Electrical Characteristics

1. Detector unit outputs shall be a relay type as referenced in NEMA TS1, Section 15.2.29.1. The output operation shall be indicated by a high intensity light emitting diode.

2. Color coding for the wire shall be as follows:

Function	Color Code
Detector Wiring	Not Specified
AC(+)	Black
AC(-)	White
Relay Common	White/Black Stripe
Ground	Green

3. The operation of the detector unit shall comply with NEMA TS1, Section 15.2.1. In addition, the detector unit shall retune to a new inductance value following an excessively large inductance change.

4. When sensor loop and loop lead-in network falls outside the specifications in NEMA TS1, Section 15.2.13, the detector shall generate a failsafe continuous output in both presence and pulse modes. The continuous output shall remain until the memory is cleared by removing power or resetting.

5. When specified, the detector unit shall have the ability to delay and extend a call to the controller. The Delay/Extension operations shall comply with NEMA TS1, Section 15.2.24. The delay time shall begin when a vehicle enters the detection area until the call relay is closed representing activation and shall be selectable in the range between 0 and 30 seconds. The extension time shall begin timing when the vehicle leaves the detection area, continuing the activation for the selected time. The time shall be selectable in the range of 0 to 7 1/2 seconds.

6. The detector unit shall have at least three selectable frequencies which shall be visible at all times on the front of the detector unit.

7. The Sensitivity Control shall comply with NEMA TS1, Section 15.2.14 and Section 15.2.15. There shall be at least three selectable sensitivity ranges located on the front of the detector unit. The sensitivities shall be nominally 0.02 percent, 0.08 percent, and 0.32 percent change in total loop inductance.

8. The modes of operation shall comply with NEMA TS1, Section 15.2.17. There shall be two presence modes and one pulse mode. The selected mode shall be indicated at all times on the front of the detector unit.

Long presence mode shall continue to detect the same vehicle within the detection area for at least 3 1/2 minutes for a Class 1 type test vehicle.

Medium presence mode shall continue to detect the same vehicle within the detection area for at least 20 seconds for a Class 1 type test vehicle.

1020.02.1.4 Fail Safe: The detector shall operate with the sensor loop shorted to ground or of poor quality. The unit shall generate a continuous call when returning failed sensor loop, failed detector unit, or power failure.

1020.02.1.5 Loop Detector Sealants: Comply with Table 1020-1:

Table 1020-1

Loop Detector Sealants

Physical Property	Test Method	Hot Applied	Cold Applied					
			Single Component		Two Component			
					Rapid Set		Slow Set	
			Self Leveling	Non-Sag	Self Leveling	Non-Sag	Self Leveling	Non-Sag
Total Solids by weight,%, Min.	ASTM D2834		60	60	60	60	60	60
Tack Free Time, hr, Max.	ASTM C679		4	4	2	2	4	4
Rheological Properties	ASTM C639 Type 1		Smooth surface		Smooth surface		Smooth surface	
Slump, mm	ASTM D2202			7.6		7.6		7.6
Extrusion Rate, mL/min, Min.	ASTM C1183		50	50				
Hardness shore A, Min.	ASTM D2240		10	10	10	10	10	10
Penetration @ 25°C, Min.	ASTM D5	60						
Softening Point, °C, Min.	ASTM D36	82						
Asphalt Compatibility[1]	ASTM D5329	pass	pass	pass	pass	pass	pass	pass
Pot Life, minutes, Min.	ASTM C881				12	12	30	30
Dielectric Strength, 60 Hz, Short Time test, Electrode 1 in air @ 25°C kV/mm, Min.	ASTM D149	13.8	13.8	13.8	13.8	13.8	13.8	13.8
Flex @-7°C, inch, 90° Bend	ASTM D5329	pass	pass	pass	pass	pass	pass	pass

[1]Not applicable when used to seal portland cement concrete pavement

1020.02.2 Video Detection System: A Video Detection System (VDS) monitors vehicles on a roadway via processing of video images and provides detector outputs to a traffic controller or similar device.

1020.02.2.1 System Function Requirement: The system shall provide flexible detection zone placement anywhere within the combined field of view of the image sensors. Presence detector configurations shall be lines or boxes placed across lanes of traffic or lines placed in-line with lanes of traffic. A single detector shall be able to replace one or more conventional

detector loops. Detection zones shall be able to be fully overlapped. In addition, detection zones shall have the capability of implementing "AND" and "OR" logical functions including presence, extension and delay timing. These logical functions may be excluded if provisions are made to bring each detector separately into the controller and the controller can provide these functions.

The system shall produce accurate detector outputs under all roadway lighting conditions, regardless of time of day.

The system shall be capable of providing 64 or more detector outputs from up to 8 camera/video processor units. The VDS processor system should provide compressed color video through the DB-9 RS-232 data stream with active detection zones overlaid.

The system shall have a modular electrical design. It shall be powered by 89-135 VAC, 60 Hz single-phase. Power to the system shall be from the transient protected side of the AC power distribution system in the traffic control cabinet in which the system is installed. If the VDS processor is located in the controller cabinet, then, the system shall be powered by 12-24 VDC and draw less than 2 amperes.

The system software shall be able to detect either approaching or departing vehicles in multiple traffic lanes. Each zone and output shall be user-definable through interactive graphics by placing lines and/or boxes in an image on a video monitor or personal computer. The user shall be able to redefine previously defined detection zones. Detection zones shall be provided that are sensitive to the direction of vehicle travel. The direction to be detected by each detection zone shall be user programmable.

The Windows software shall be able to display the traffic parameters on the video monitor per vehicle for each detection zone by lane. It shall be possible to view and sort the stored data for selected time intervals. When the monitoring equipment is directly connected to the VDS processor unit, it shall be possible to view vehicle detections in real-time.

The field communications wiring between each camera and the traffic controller cabinet shall meet VDS factory requirements.

1020.02.2.2 VDS Processor: The processor is an electronic unit that converts the video image provided by the cameras, generates vehicle detection for defined zones and collects vehicular data as specified.

The VDS processor may be housed in either the cabinet or camera housing. The processor shall fit directly into NEMA TS1 and TS2 type detector racks or equipment manufacture supplied racks. The video output from the unit shall be in color with active detection zones overlaid on full motion video.

The processor unit shall be capable of providing the following detection zones: count, presence, directional presence, speed, stopped vehicles, and queue types of detection zones. The processor unit shall meet the following requirements:

1. Each video processor module card shall be capable of a minimum of 64 detector outputs and each processor input shall be capable of a minimum of 20 detection zones.

2. The processor unit shall meet the environmental requirements set forth by the latest NEMA (National Electrical Manufacturers Association) TS1 and TS2 standards. Operating temperature shall be from -25°F to +160°F at zero to 95 percent relative humidity, non-condensing.

3. Detection input shall be via a SDLC interface connection to the signal controller front panel.

4. The processor unit software and/or the supervisor software shall include diagnostic to allow testing of the system functions. It shall include the capability to set, clear individual detector outputs, and display the status of inputs to setup and troubleshoot in the field.

5. The processor shall provide real-time vehicle detection within 112 milliseconds (ms) of vehicle arrival. It shall be capable of simultaneously processing information from various video sources, including CCTV video image sensors and video tape players. The video sources may be, but are not required to be, synchronized or line-locked.

6. The processor shall compensate for minor camera movement up to 2 percent of the field of view at 400 ft. without falsely detecting vehicles. The camera movement shall be measured on the unprocessed video input to the processor unit. The camera shall operate while directly connected to the processor unit. Once the detector configuration has been downloaded or saved, the video detection system shall operate with the monitoring equipment (monitor and/or laptop) disconnected or on-line.

1020.02.2.3 BIU (Bus Interface Unit): The VDS system shall incorporate one BIU to accomplish controller interface connection. This BIU shall be capable of a minimum of 64 outputs with the BIU assignment being hardware selectable.

1020.02.2.4 Video Detection Camera: The video detection camera shall be compatible with the video detection processor and shall be certified by the manufacturer to ensure proper system operation.

The camera shall produce a useable video image in 0.009 to 930 foot-candles luminance.

Images shall be produced with a Charge Coupled Device (CCD) sensing element with horizontal resolution of at least 470 lines and vertical resolution

of at least 400 lines. Images shall be output as a video signal conforming to RS 170A or CCIR.

The camera shall include mechanisms to compensate for changing of lighting by using an electronic shutter and/or auto-iris lens.

The camera shall include a motorized variable focal length lens with factory preset focus that requires no field adjustment. Zooming of the camera lens is required to suit the site geometry by means of a portable interface device designed for that purpose and manufactured by the detection system supplier or via software and standard laptop.

When operating in the environmental enclosure with power and video signal cables connected, the image sensor shall meet FCC class B requirements for electromagnetic interference emissions.

The video output of the cameras shall be isolated from earth ground. All video connections for the cameras to the video interface panel shall also be isolated from earth ground. Connections for both video and power shall be made to the processor using waterproof, quick disconnect connectors.

1020.02.2.5 Camera Enclosure: The camera and lens assembly shall be housed in an environmental enclosure that meets or exceeds NEMA-4X and provides the following capabilities:

1. Be metallic and waterproof and dust-tight to the latest NEMA-4X specifications.

2. Allow the camera to operate satisfactorily over an ambient temperature range from -25°F to +160°F while exposed to precipitation as well as direct sunlight.

3. Allow the camera horizon to be rotated in the field during installation.

4. Include a provision at the rear of the enclosure for connection of power and video signal cables. The input power to the environmental enclosure shall be nominally 120 or 240 VAC 50/60 Hz and the power consumption shall be 35 watts or less under all conditions.

5. A thermostatically controlled heater shall be at the front of the enclosure to prevent the formation of ice and condensation, as well as to assure proper operation of the lens's iris mechanism. The heater shall not interfere with the operation of the camera electronics, and it shall not cause interference with the video signal.

6. The enclosure shall be light-colored and shall include a sun shield to minimize solar heating. The front edge of the sunshield shall protrude beyond the front edge of the environmental enclosure and shall include provision to divert water flow to the sides of the sunshield. The amount of overhang of the sun shield shall be adjustable to block the view of the horizon

to prevent direct sunlight from entering the lens. Any plastics used in the enclosure shall include ultra violet inhibitors.

7. The total weight of the image sensor in the environmental enclosure with sunshield shall be less than 20 lbs.

8. Camera mounting hardware shall allow for vertical or horizontal mounting to the camera enclosure.

1020.02.2.6 Maintenance and Support: Maintenance and support is required from the manufacturer for 10 years. The equipment manufacturer shall maintain an adequate inventory of parts to support maintenance and repair of the video detection system. These parts shall be available for delivery within 48 hours of placement of an order.

The equipment manufacturer shall maintain an ongoing program of technical support for the video detection system. The equipment manufacturer shall provide on-site technical support and support on any special circuitry that may be required in certain applications.

The equipment manufacturer shall be on call 24/7 and be present at any designated state signal location within 12 hours of notification. The contact information shall be provided to the State Traffic Signal Engineer at Traffic Services and continually updated.

1020.02.2.7 Warranty: All material and workmanship shall be covered by supplier(s')/manufacturer(s') guarantee and/or warranty for a period of a minimum of 2 years or longer, if offered by the manufacturer. Warranty period shall begin the day the video detection system is activated, either as new order or warranty repair.

The equipment manufacturer shall bear all expenses connected with return of any equipment which the Department deems necessary to return for adjustments during warranty period.

Equipment manufacturer(s) shall make all engineering data, diagrams, and software changes or improvements available to the Department at no additional cost.

1020.02.3 Pedestrian Pushbuttons:

1020.02.3.1 Housing: The pedestrian push button housing shall be weather-tight and tamper-proof.

Housing shall be designed to prevent an electrical shock. It shall have provisions for grounding in accordance with the National Electrical Code (NEC).

Pedestrian push button housing shall be cast from aluminum alloy, smooth, and free of blemishes. The manufacturer's name or trademark shall be located on the housing.

Both housing and cover shall have an anodized conversion coating to provide a proper base for paint adhesion. The assembly shall match the signal head's color. Apply paint or powder coat to match the color of the signal heads.

All bolts, nuts, washer, lock washers, screws, and other assembly hardware shall be galvanized steel, stainless steel, or dichromate sealed aluminum. When dissimilar metals are used, the metals shall be so selected or insulated to prevent corrosion.

The bottom provisions of the housing shall be tapped for and provided with a 1/2-inch National Pipe Tapered (NPT) threaded conduit plug. The back of the push button housing shall be provided with a hole capable of being threaded for a 1/2 - inch NPT threaded conduit plug and capped with a non-threaded 1/2- inch plastic plug. The back mounting provisions of the housing shall be designed to accommodate pole diameters from 3 inches to 14 inches.

1020.02.3.2 Push Button

The push button switch shall be actuated by a plunger with a minimum 2-inch convex diameter. The assembly shall be designed so that the maximum plunger travel does not exceed the switch travel. A spring shall be installed between the plunger and switch. The spring shall provide an operating force of less than 5 lbs. A protective shroud shall encircle the plunger to deter vandalism. The shroud shall be cast as an integral part of the cover. There shall be a moisture barrier between the plunger and the switch. The assembly shall conform to all minimum requirements set forth with the American with Disabilities Act.

1020.02.3.3 Wiring and Electrical Requirements

The switch shall have terminal connection points on back to allow for an electrical spade connection to the back of the switch allowing user to connect twisted pair directly to the back of the switch. Wire and wire nut connections from the back of the switch shall not be acceptable.

The switch assembly shall be capable of operating in temperature ranges of 20 ºF through 120 ºF. The switch assembly shall be electrically rated to carry 25 amps at 125 volts AC, 250 volts maximum. The switch assembly must have the following recognized certifications and/or approval: UL, CSSA, Mil Spec # MIL-S-8805.

1020.02.4 Wireless Magnetometer Vehicle Detection System:

Only Wireless Magnetometer Vehicle Detection Systems on the Traffic Operations Approved Products List will be accepted.

1020.03 TRAFFIC SIGNAL HARDWARE AND EQUIPMENT.

1020.03.1 General: This subsection defines the general requirements that apply to all hardware and equipment not specifically listed. When design tests are specified, provide documentation indicating that such tests have been satisfactorily completed.

1020.03.2 Miscellaneous Hardware: Screws, nuts, and lock washers shall be stainless steel or galvanized in accordance with Section 811. Do not use self-tapping screws unless approved.

1020.03.3 Pedestal Anchor Bolts: Furnish steel anchor bolts as shown on the plans and fit with one hex nut and one washer. Nuts, washers, and anchor bolts shall be galvanized in accordance with ASTM A153.

1020.03.4 Support Cable (Span): Support cable for interconnect and detector support cable shall be 1/4-inch outside diameter and signal support cable and guy wire shall be 3/8-inch outside diameter and shall comply with ASTM A475, 7-strand Siemens-Martin grade with Class A coating.

1020.03.5 Guy Components: Guying components and hardware shall be galvanized in accordance with ASTM A123 and ASTM A153.

Guy clamps shall be steel, 3-bolt type, 6 inches in length, and of proper strand size to fit both sizes of cable. Clamp bolts shall have an upset shoulder fitting into the clamp plate.

1020.03.6 Traffic Signal Conductors: Furnish 600 volt insulated THHN/THWN or XHHW cable. Filler material, when used, shall be non-metallic, moisture resistant, non-hydroscopic, non-wicking, and non-absorbent. The conductors that are to be marked with tracer in addition to the solid color shall have the tracer as part of the insulation. Ink marking is not acceptable. The outside jacket shall be smooth and shall not display patterns of the conductor lay on the outside of the jacket.

The traffic signal cable shall be No. 14 AWG stranded conductor. All material, color code, and testing shall comply with IMSA 20-1. The interconnecting cable between intersections for closed loop and telemetry operation shall be 6 pair No 19 AWG, IMSA 20-2.

Loop lead-in conductor shall be tinned copper No. 14 AWG stranded conductor, twisted pair with an overall shield. The cable shall comply with IMSA 50-2. Loop detector wire shall comply with IMSA 51-7 and shall be 19 strand insulated by a cross linked polyethylene compound. The insulated conductor shall be completely incased in a tube of low density polyethylene compound.

1020.03.7 Underground Electrical Junction Box: Only pull boxes on the Traffic Operations Approved Products List will be accepted.

1020.03.8 LED Blank-Out Signs:

1020.03.8.1 General: Blank-Out Signs shall have "on" or "off" functions and shall operate on 120 VAC power.

Blank-Out Signs legend shall be in compliance with the current FHWA/MUTCD specification. The symbols shall be clearly legible under all lighting conditions. Also, the sign shall be capable of continuous operation over a range in temperatures from -15ºF to +140ºF.

1020.03.8.2 Enclosure: Each enclosure shall be a minimum of NEMA 3R construction, self-supporting, aluminum. Enclosure shall come with complete mounting hardware to be suspended from a 3/8 inch span wire, or a mast arm as shown on the plans. Enclosure shall use a neoprene strip to provide a watertight seal between the door and the display lens; it also shall have one or more stainless steel link locks to tightly secure the door to the gasket.

Mount the LED assembly on the face of the Blank-Out Sign. The sign shall have a visor to protect the sign's face from direct sunlight. Blank-Out Signs' components shall be readily accessible. Provide drain holes that prevent insect entrance to the enclosure and an adequate means for condensation to drain from the enclosure. All corners or seams shall be heli-arc welded to provide a weatherproof seal around the entire case.

Maximum weight of enclosure including all components shall be 35 pounds. The finish for the enclosure body shall be powder coated satin black. The message board mask shall be finished in a flat black powder coat. The inside surface of the glare shield shall be powder coated flat black and the outside surface of the glare shield shall be powder coated the color of the enclosure body.

1020.03.8.3 LED Modules: LED assembly shall be mounted to a flat black aluminum panel. Diming shall be a standard feature on the Blank-Out Signs. Incorporate a dimmer failsafe feature whereby the light engine will continue operating at its full intensity in the event of a dimmer relay or sensor failure.

1020.03.8.4 Electrical

Electrical requirements shall comply with ITE VTCSH, July 1, 2007 Edition, Light Emitting Diode (LED) Vehicle Arrow Traffic Signal Supplement, Sections 5.2 thru 5.8.

1020.03.9 Flashing Switch Assembly for Beacons:

1020.03.9.1 General: The flashing switch assembly shall include a preassembled: enclosure, required hubs and gaskets, back panel, Cinch

Jones socket, solid state flasher, and terminal block with provision for terminating all field and local wiring. , The assembly specified herein shall be designed to operate on 110-130 volt, 60 cycle, alternating current, and shall be completely wired and enclosed in a weatherproof cabinet. The flasher shall meet NEMA standards for a two-circuit flasher rated at 15 amps per circuit (Type 3).

For the purpose of these specifications, the term "solid state" is defined as: the main current to the signal load that is not switched by electro-mechanically operated contacts.

The flasher shall be certified by an independent laboratory as conforming to NEMA TS-1, Section 8, and Section 2.2.3.2. This certificate shall be included with the drawing and literature for this equipment.

1020.03.9.2 Cabinet: Furnish the switch in a weatherproof aluminum cabinet with minimum interior dimensions of 9-3/4 inches wide, 12 inches long and 5-1/2 inches deep. Provide a standard lock with one key to the door "Traffic Control" or "Traffic Signals" shall be cast or embossed into the metal with letters 3/4 inches high or larger on the door.

All cabinets shall be suitable for wood or steel pole mounting. Cabinet shall have two 2-inch wire entrance holes, one in the top and one in the bottom. The wire entrance holes shall be located on the back edge of the cabinet and centered on the width of the cabinet. The hubs to the cabinet shall align on the center of the entrance hole. Lock washers and hex nuts for the bolts shall be used to attach to the hub. The bolt pattern for the hub is 2-1/8 inch centered on a line perpendicular to the outside back of the cabinet and 3-3/4 inch parallel to the back of the cabinet. Mounting holes for the bolts shall be 3/8 inch. The centers of the bolt pattern on the hub and the wire entrance hole shall coincide. The location of the hubs shall allow minimum clearance for box end wrenches to fit onto the nuts within the cabinet. Apply paint or powder coat to match the color of the signal heads. The interior shall be furnished with gloss white enamel by the manufacturer.

1020.03.9.3 Hub, Conduit: Hubs for the cabinet shall be cast aluminum, ASTM B108. All threaded hubs shall have a threaded collar a minimum of 2 inches from the base of the hub. The manufacturer shall make all hubs with stainless steel bolts casted into the hub. The manufacturer shall design the hub with the outside smooth to shed water.

Table 1020-2
Cabinet Hub Description

TYPE	OPENING(S) SIZE, Inches	OPENING DESCRIPTION Inches
blank	- 0 -	no opening, flat plate, ¼ minimum thickness
single	3/4	one (1) opening, 3/4 conduit thread
single	1	one (1) opening, 1 conduit thread
single	1-1/2	one (1) opening, 1-1/2 conduit thread
single	2	one (1) opening, 2 conduit thread
single	2-1/2	one (1) opening, 2-1/2 conduit thread
single	3	one (1) opening, 3 conduit thread
Double	3/4	two (2) openings, each 3/4 conduit thread
Double	1	two (2) openings, each 1 conduit thread

1020.03.9.4 Back Panel Characteristics: The panel shall have mounted on it a cartridge type fuse, connector for NEMA Type 3 flasher, flasher support bracket, and permanently identified field terminals. The back panel size shall be 9 inches wide and 12 inches high. The back panel constructed of 1/4 inch electrical grade *masonite*. The panel shall have four (4) mounting holes approximately 11/32 inches in diameter. The holes shall be centered on an 8-inch x 9-inch bolt pattern. The bolt pattern shall be centered on the back panel. The back panel shall support the NEMA flasher from the panel along its longest dimension. The support shall not restrict removal or installation of the flasher unit on the back panel while the panel is in the cabinet. All wiring shall be on the front of the panel. The field terminals shall be wired to the field side of the terminal block.

1020.03.9.5 Electrical Characteristics: Flashers shall have the following electrical characteristics:

1. The rating of the output circuit shall be the minimum rating for a tungsten lamp or gas-tuning-transformer load over a voltage range of 60 to 135 volts at 60 hertz. The output circuit shall not be de-rated for the operation over the ambient range of -30 ºF to 165 °F and the humidity range as both detailed in NEMA TS 2 standards.

2. Input to the solid-state flashers shall consist solely of the 60-hertz alternating-current power source. This input shall supply the power for the output circuit and also provide power to the flasher logic. The flasher shall turn on within 5 degrees of the zero voltage point of the alternating current line sinusoid and shall turn off within 5 degrees of the zero current point of the alternating-current line sinusoid. The flasher need not turn on within 5 degrees of the zero point of the alternating-current sinusoid for the first flash

cycle (on-off cycle) after the initial application of alternating-current power to the flasher.

3. The "flashing" voltage output shall provide not less than 50, nor more than 60, flashes per minute with an on period of 50 + 5%.

4. The flasher output shall have a dv/dt rating of 100 volts per microsecond at 70 °F.

5. The flasher output shall have a peak standoff voltage of 480 volts or greater at 70 °F.

6. The output current from the flasher through the load, when the flasher is in the off state, shall not exceed a maximum of 15 milliamperes rms.

7. The flashing output shall consist of 2 outputs each rated at 15 amperes.

8. Flashers shall be so designed that circuit #1 will be essentially ON when circuit #2 is OFF, and vice-versa. The principal purpose served by this arrangement is to smooth out the loading on the power source. The maximum OFF period when both circuit #1 and circuit #2 are OFF, or the maximum ON period when both circuit #1 and circuit #2 are ON, shall not exceed 17 milliseconds during the transition from OFF to ON to OFF.

9. The line power shall be fused with NON 0-30 amp fuse. This fuse shall be sized properly for the load limit of the flasher. The wiring shall be properly sized for the design current of each circuit. Separate terminals for the line and field neutral shall be provided.

10. Lightning protection shall be provided for line input and each signal circuit. A gas filled fuse shall be across the line input on the load side of the fuse. It shall be capable of clamping input voltage at 350 volts. A Metal Oxide Varistor (MOV) shall be on each signal circuit and provide a minimum clamping voltage of 395 volts and dissipate 30 joules of energy (GE - V150LA10A or approved equal).

11. All electrical connectors shall be insulated from the back panel at a 600 VAC rating.

12. Use a Cinch-Jones socket type S-406-SB or equivalent.

13. All printed circuit boards shall be made from NEMA (FR-4) glass-epoxy, or equivalent (See NEMA Standards Publication No. LI 1-1971). Circuit boards exceeding 2 inches in any dimension shall have a nominal thickness of at least 1/32 inches.

14. All PC boards shall be coated with an epoxy or approved equal type material to prevent erratic performance due to high humidity, condensation, and growth of fungus and mildew. This coating will not cover the components on the board, but once the components are in place, the soldered joints shall be covered with a moisture and fungus proof, clear type of acrylic lacquer. This coating shall not be injurious to the board or components and

shall not interfere with the repair of the circuitry or replacement of components. The walls of all plated through holes shall have a minimum copper plating thickness of 0.001 inches. All circuit tracks shall have conductivity equivalent to at least 2 ounces per square foot of copper (2 oz/ft² Cu).

15. All electrical mating surfaces shall be made of non-corrosive material. The unit shall be designed so that each component is identified by a circuit reference symbol. This identification may be affixed to the printed circuit boards, the cover of the unit, or in an assembly drawing provided with the unit.

1020.04 POLES FOR TRAFFIC SIGNAL SYSTEMS.

1020.04.1 Pedestal Signal Poles: The pole shall be in accordance with the plans. The base of the pedestal pole shall be cast iron or aluminum and shall be at least 16 inches wide at the bottom, at least 16 inches high and shall be octagonal.

The upper end of the base shall be threaded to receive a 4-inch diameter pipe shaft.

The base shall be designed so that it may be fastened to the foundation using 5/8-inch-by-16-inch anchor bolts located 90 degrees apart on the circumference of a circle 12-3/4 inches in diameter.

The base shall contain a removable door to allow access to anchor bolts and to permit cable splicing. This door shall be fastened to the base using a hex head stainless steel screw into a threaded hole in the base.

The shaft shall be 4 inches in inside diameter welded steel tubing with a minimum 1/8-inch wall thickness. The lower end of the shaft shall be welded to a 6-inch nipple to screw into the base. This shaft shall be a single piece of tubing.

Apply paint or powder coat to match the color of the signal heads.

1020.04.2 Steel Signal Strain Pole:

1020.04.2.1 General: Poles and fittings shall be in accordance with the plans and shall be galvanized in accordance with Section 811. Poles shall be suitable for a minimum horizontal load of 4,000 pounds applied 1 foot below the top of pole.

1020.04.2.2 Pole Shaft:

The pole shaft shall have a minimum base diameter of 11 inches and a maximum base diameter of 11 3/4 inches. The pole shaft shall be tapered to 7 1/2 inch minimum to 8 1/2 inch maximum diameter at the top. The pole shaft may have a round or octagonal cross section. A removable cap shall be used to cover the top of the pole shaft.

The pole shall be designed so that its maximum deflection is as shown in Table 1020-3.

Table 1020-3
Steel Pole Deflection

Pole Length, ft	Maximum Deflection, in/100 lb
26	0.25
28	0.30
30	0.38

The pole base shall be designed to fit a 16 inches diameter bolt pattern utilizing four 1-3/4 inches 5NC threaded anchor bolts. The base shall have the manufacturer's name and pole height stenciled on it and shall be readable from the outside of the pole. The stencil shall be legible after galvanizing.

1020.04.2.3 Hand Holes and Bosses: A hand hole shall be provided approximately 18 inches above the base with approximate dimensions of 4 inches by 6 1/2 inches and cover shall be provided. The cover shall be restrained to the pole with a 15 inch No. 35 stainless steel chain fastened to the cover and to the inside of the hand hole so that the chain will be inside the pole after the cover is installed on the pole. There shall be no sharp edges on the cover, in the hand hole, or in the pole. The cover shall have the manufacturer's name and the pole height stenciled on it, readable from the outside of the pole. The stencil shall be legible after galvanizing. The hand hole strain bar shall be formed to provide a mechanical lock against the hand hole to prevent turning. No obstructions shall be in the hand hole with the cover removed. A Underwriters Laboratories (U.L.) approved grounding lug shall be provided with each pole. Ground lug shall accept a #6 AWG solid bare copper ground wire.

All poles shall have one 1-inch and one 3-inch boss centered on a horizontal line 18 inches from the base and one 1-inch and two 3-inch bosses 18 inches from the top. When facing the bosses, the 1-inch boss shall be 35 degrees ±3 degrees to the right of the 3-inch boss. The 3-inch boss shall be located 180 degrees from the hand hole. The bosses at the top of the pole shall be in line with the bosses at the bottom. The poles shall be shipped with all bosses plugged using galvanized steel conduit plugs installed to full thread depth. On octagonal poles the 3-inch boss shall be centered on one face that is parallel to one edge of the base plate.

1020.04.2.4 Pole Hardware: Furnish anchor bolts in accordance with the standard details. Anchor bolts shall be 1 3/4 inch, 5 NC thread with

a yield strength of 105,000 psi and be hot dipped galvanized for the top 12 inches and comply with ASTM A193-B7. Furnish one additional anchor bolt for acceptance testing by the Department.

1020.04.3 Steel Signal Mast Arm Poles:

1020.04.3.1 50 Feet Single, 45 Feet x 40 Feet Dual and Less: All mast arms 50 feet single, 45 feet x 40 feet dual and less shall be required to conform to AASHTO 1994. All mast arm designs will be approved by State Traffic Signal Engineer.

Mast arms and fittings shall be galvanized in accordance with Section 811. The height of poles, shaft dimensions, and wall thickness shall meet the design requirements and mounting height of traffic signals set forth in the project specifications and in the plans. The length of arms shall be as shown on the plans.

Standards shall consist of straight or uniformly tapered shafts, cylindrical or octagonal in cross section, having a base welded to the lower end with anchor bolts. Castings shall be clean and smooth with details well defined and true to pattern. Mechanical control shall prevent the arm from twisting on the shaft. Friction is not acceptable.

Mast arms shall be compatible with poles in materials, strength, shape, and size. Mast arms shall slip fit on the shaft.

1020.04.3.1.1 Hand Holes and Bosses: A hand hole shall be provided for access to the wireway at the union of the arm and the pole shaft. Bosses shall be 1 1/2 FPT in the mast arm and set at 45 degrees from horizontal (downward rotation at the center of the boss, 0 degrees toward the arm top). Bosses shall be located a horizontal distance of 10 feet apart, the first located 16 inches from the top of the arm. The number of bosses required is listed in Table 1020-4.

Table 1020-4
Steel Signal Support Standards

Shaft		Shaft Base Plate	
Arm Length, ft	Number of Bosses	Diameter, Inches, Max.	Bolt Circle, Inches, Max.
15 -20	2	10	14 1/2
25-30	3	12	15
35-50	4	13	16

1020.04.3.1.2 Hanger Plate: A hanger plate and horizontal boss shall be at the tip of the arm. The arm shall have an up-sweep design.

Design load on the arm shall be sufficient to place a signal head at each boss.

1020.04.3.1.3 Design Requirements: For establishing the loads, applied to each structure, the weights and projected areas of Table 1020-5 shall be used for traffic signal heads.

Table 1020-5
Steel Signal Support Standards Design Requirements

Type[1]	Design Weight Per Signal, pounds[1]	Projected Area Per Signal	
		Less Backplates, square feet	Backplates, square feet
1-Way, 3 Section	62	4.8	8.9
1-Way, 4 Section	76	6.6	11.2
2-Way, 3 + 3 Sections	126	8.7	12.2
3-Way, 3+3+3 Sections	179	13.35	15.6
4-Way, 3+3+3+3 Sections	235	13.2	15.6

[1]When signal heads of a type different from that shown above are used, the weights and projected area shown above shall be increased for the equipment proposed for use. Adjusted values shall be based on the use of 12-inch diameter lenses and backplates (when used) extending 5 inches beyond signal enclosure.

1020.04.3.1.4 Standard Shaft: The standard shaft base shall have a minimum diameter of 11 inches. Mast arm standards shall be provided with a transformer type base.

Each pole shall be bolted to transformer base with four hex head bolts with two washers and one nut for each bolt.

1020.04.3.1.5 Transformer Base: The transformer base shall be approximately 20 inches high. The top of the transformer base shall have four 1 1/2-inches-by-2 1/2-inches slots for bolting the pole to the transformer base. The 2 1/2-inches dimension of the slot shall be centered on and perpendicular to a 13 1/2-inches bolt circle.

A removal panel on the side of the transformer base shall be provided for access to the base. A 1/2-inch -13NC grounding nut shall be provided 90 degrees left of this panel. A U.L. approved grounding lug shall be provided with each pole. Ground lug shall accept a #6 AWG solid bare copper ground wire. The bottom of the transformer base shall fit a 16-inches bolt circle using four 1 3/4-inches bolts supplied with each pole. These bolts shall conform to these specifications and plan details with exception that the cap nuts shall be replaced with the regular hex nuts. The transformer base shall be capable of being rotated 360 degrees.

1020.04.3.1.6 Wireways: The pole shaft and mast arm shall be suitable for wire ways throughout their length.

1020.04.3.1.7 Identification: The pole shaft, mast arm and arms, and transformer base shall have a matching serial number.

1020.04.3.2 55 Feet Single, 50 Feet x 35 Feet Dual and Greater: Only Bolt-On Mast Arms & Dual Mast Arm Poles on the Traffic Operations Approved Products List will be accepted. The design shall meet the requirements of the 2009 edition *AASHTO Standard Specification for Structural Supports for Highway Signs, Luminaries, and Traffic Signals.* All mast arm designs will be approved by the State Traffic Signal Engineer.

Mast arm assemblies, anchor bolts and hardware shall be hot dipped galvanized in accordance with Section 811 and all materials shall conform to the applicable provisions of Section 1013.

1020.04.4 Anchor Bolts for Steel Signal Support Poles and Standards

For all strain poles and 55 feet or less mast arm, furnish anchor bolts in accordance with the standard details. Anchor bolts shall be 1 3/4 inches, 5 NC thread with a yield strength of 105 ksi, be hot dipped galvanized for the top 12 inches, and comply with ASTM F1554 Grade 105. Furnish one additional anchor bolt for acceptance testing by the Department.

For 55 feet single, 50 feet x 35 feet dual and greater mast arms, furnish anchor bolts in accordance with the standard details. Anchor bolts shall be 2-1/4 inch, with a yield strength of 55 ksi, shall be hot dipped galvanized for the top 12 inches, and shall comply with ASTM F1554 Grade 55. Furnish one additional anchor bolt for acceptance testing by the Department.

1020.04.5 Treated Timber Poles: Comply with Section 1014.

1020.05 Traffic Signal Cabinet

Only TS-2 Traffic Signal Cabinets on the Traffic Operations Approved Products List will be accepted.

1020.06 Solar Powered Flashing Beacons

Only Solar Powered Flashing Beacons on the Traffic Operations Approved Products List will be accepted.

INDEX

	Section	Page
A		
Abbreviations	101.02	2
Acceptance (Also see specification sections)		
Final	105.17	52
Final Payment	109.08	111
Partial	105.17	52
Acts of God	101.03, 107.19	4, 85
Additives	501.02, 502.02	224, 234
	503.05, 1002.02	273, 935
Admixtures	901.08, 1011.02	917, 995
Advertisement	101.03	4
Aggregate Surface Course	401	215
Aggregates	1003	947
Asphalt Mixtures	1003.06	956
Asphalt Surface Treatment	1003.07	958
Backfill	1003.11	963
Base Course Aggregates	1003.03	953
Bedding Material	1003.10	962
Friction Rating	1003.01	947
Granular Material	1003.09	961
Nonplastic Embankment	1003.02	952
Portland Cement Concrete and Mortar	1003.08	958
Subgrade Layer	1003.04	954
Surface Course	1003.05	955
Agricultural Lime	718	432
Airport Pavement Markings		
(Supplemental Specification)	743	529
Alteration of Contract	104.02	33
Altered Quantities, Compensation for	109.03	103
Anchor Bolts	807.06.3	676
	1013	999
Approval of Contract	103.06	30
Approved Materials List	101.03	4
Asphalt		
Additives	1002	935
Cement	1002	935
Concrete Mixtures	501	223
	502	234
Curing Membrane	506	287
Emulsions	1002	935
Equipment and Processes	503	270
Lot Sizes	501.04	225
	502.10	250
Mix Design	501.03	225
	502.03	239

	Section	Page
Pavement Patching, Widening, and Joint Repair	510	302
Prime Coat	505	285
Surface Treatment	507	289
Tack Coat	504	283
Thin Concrete Applications	501	223
Assembly Period	101.03	4
Award and Execution of Contract	103	28
Award of Contract.	101.03, 103.02	4, 29
Cancellation of Award	103.03	29
Consideration of Bids	103.01	28
Execution and Approval of Contract	103.06	30
Failure to Execute Contract	103.07	31
Notice to Proceed	103.08	31
Payment, Performance, and Retainage Bonds	103.05	30
Return of Proposal/Bid Guaranty	103.04	29
B		
Barricades	107.10, 713	79, 400
	729	466
	1018	1040
Barriers	713	400,
	810	684
Base Course		
Class I	301	151
Class II	302	168
In-Place Cement Stabilized and Treated Base	303	181
In-Place Cement Treated Subgrade	309	211
Lime Treatment	304	192
Permeable Bases	307	206
Scarifying and Compacting Roadbed	306	204
Subgrade Layer	305	199
Bearing Piles (See Piles)	804	591
Bedding Material	726	459
	1003.10	962
Bidder		
Definition	101.03	4
Disqualification	102.04, 108.04	20, 89
Prequalification	102.01	18
Bidding Requirements	102	18
Contents of Bidding Documents	102.03	18
Contractors' Licensing Laws	102.02	18
Delivery of Bids	102.10	25
Examination of Bid Documents and Site of Work	102.06	20
Interpretation of Pay Items and Quantities in Schedule of Items	102.05	20

	Section	Page
Irregular Bids	102.08	22
Issuance of Bid Documents	102.04	20
Preparation of Bid	102.07	21
Prequalification of Bidders	102.01	18
Proposal/Bid Guaranty	102.09	24
Public Opening of Bids	102.12	25
Withdrawal of Bids Due to Error	102.13	25
Withdrawal or Revision of Bids	102.11	25
Blended Hydraulic Cement	1001.02	933
Bolts	807.05.1	658
Bolted Connections	807.05.2	661
Bond		
Payment, Performance, and Retainage Bonds	103.05	30
Proposal/Bid Guaranty	101.03, 102.09	4, 24
	103.04	29
Borrow	203	129
Bridges		
Bearings	814	731
Bridge Drainage Systems	816	743
Bridge Railings, Hand Railings, Permanent Roadway Barriers, and Marine Pier Protection	810	684
Concrete Approach Slabs	813	728
Definition	101.03	4
Deformed Reinforcing Steel	806	641
Drilled Shafts	803	558
Elastomeric Bearing Pads	1018.14	1043
Electrical Systems	822	867
Facilities	823	879
General Requirements	801	532
Instrumentation and Evaluation	829	901
Joints	815	737
Marine Pier Protection Systems	818	755
Mechanical Systems	821	794
Movable Bridges	820	766
Painting and Protective Coatings	811	687
Piles	804	591
Repair and Rehabilitation	830	904
Steel Grid Flooring	808	679
Structural Concrete	805	617
Structural Excavation, Backfill, and Earth Retaining Systems	802	538
Structural Metals	807	647
Temporary Works	817	746
Treated Timber	812	723
Welding	809	682

	Section	Page
C		
Cancellation of Award	103.03	29
Catch Basins	702, 1013	362, 999
Cattle Guards	709	387
Certificates	106.04	63
Change Order	101.03, 104.02	4, 33
Claims		
Additional Compensation	105.18	53
Damage	107.17	83
Class I Base Course	301	151
Class II Base Course	302	168
Cleaning and Painting Containment Systems	817.03.2.6	749
Clearing and Grubbing	201	114
Coatings, Protective	811	687
Cofferdams	817.03.2.4	748
Concrete		
Admixtures	1011	995
Aggregates	1003	947
Anchor Systems	1018.08	1042
Approach Slabs	813	728
Asphalt	501, 502	223, 234
Curing Materials	1011	995
Portland Cement	601, 901	306, 911
	1001	933
Reinforcing Steel	806	641
Roadway Barriers	810	684
Structural	805	617
Special Finishes	1011	995
Surface Finishes	805.08	628
Walks, Drives and Incidental Paving	706	379
Consideration of Bids	103.01	28
Construction Layout	740	524
Construction Progress Schedule	108.03	89
Construction Site Survey	804.11	607
Contract		
Approval	103.06	30
Award	101.03, 103.02	4, 29
Cancellation of Award	103.03	29
Consideration of Bids	103.01	28
Controlling Items of Work	101.03	4
Default of	108.09	96
Definition	101.03	4
Execution	103.06	30
Failure to Execute	103.07	31

	Section	Page
Measurement of Quantities	109.01	101
Pay Item	101.03	11
Payment	109.02	103
Notice to Proceed	101.03, 103.08	11, 31
	108.02	89
Return of Proposal/Bid Guaranty	103.04	29
Scope of Work	104	32
Subletting of	108.01	88
Specifications	101.03	13
Time	101.03, 108.07	7, 92
	108.08	94
Control of Access	101.03	7
Control of Materials	106	61
Acceptance Samples and Tests	106.03	62
Certificates	106.04	64
Contractor Quality Control	106.05	63
Department-Furnished Material	106.12	66
Field Laboratory	106.07	64
Foreign Materials	106.08	64
Handling Materials	106.10	65
Local Material Sources	106.02	61
Material Storage and Plant Site	106.09	65
Plant Inspection	106.06	64
Source of Supply and Quality Requirements	106.01	61
Unacceptable Materials	106.11	65
Control of Work	105	41
Acceptance	105.17	52
Authority and Duties of Project Engineer	105.09	47
Authority of the Engineer.	105.01	41
Bidder Inquiries	105.19.1	53
Claims for Additional Compensation	105.18	53
Conformity with Plans and Specifications	105.03	43
Contractor Requests and Proposals	105.19	53
Construction Stakes, Lines and Grades	105.08	47
Cooperation between Contractors	105.07	46
Cooperation by Contractor	105.05	44
Cooperation with Utilities	105.06	45
Coordination Precedence of Contract Documents	105.04	44
Duties of the Inspector	105.10	48
Failure to Maintain Roadway or Structure	105.16	51
Inspection of Work	105.11	48
Inspector's Stamp for Shipment	105.12	49
Load Restrictions	105.14	50
Maintenance During Construction	105.15	51
Plans and Submittals	105.02	41

	Section	Page
Removal of Unacceptable and Unauthorized Work	105.13	49
Value Engineering Proposals	105.19.3	54
Culverts and Storm Drains	701	349
Curbs and Gutters	707	381
Curing	(See specification sections)	

D

Debris Collection	721	447
Dedicated Stockpile	101.03	7
Definitions	101.03	4
Density Control	(See specification sections)	
Detour Bridges	817.03.1.1	746
Detour Roads	725	457
Drilled Shafts	803	558
Construction Requirements	803.05	566
Drilled Shaft Excavation Protection Methods	803.05.2	567
Drilled Shaft Installation Plan	803.03.2	561
Evaluation and Shaft Acceptance	803.05.15	585
Integrity Testing	803.05.11	576
Load Test	803.05.12	579
Materials	803.02	558
Shaft Construction Logs	803.03.4	564
Submittals	803.03	561
Technique Shaft	803.05.14	584
Testing Reports	803.03.5	566
Drives, Concrete	706	378

E

Earthwork	203, 802	129, 538
Electrical Systems	822	867
Electrical Operation and Maintenance Manual	822.06.6	871
Electrical Service	822.10	874
General Requirements	822.05	868
Submittals	822.06	869
System Testing	822.09	874
Embankment	203	129
End Treatment, Culvert	702	362
Engineering Directives and Standards Manual	101.03	9
Environmental Protection	107.14	81
Epoxy Resin Systems	1017	1036
Equipment	(See specification sections)	
Erosion Control Systems	720, 1018.15	445, 1045
Excavation	203, 802	129, 538
Explosives	107.11, 201.04, 202.03	79, 114 117

	Section	Page
Extra Work	104.02.5	36

F

Facilities	823	879
Facility Architectural Specifications	823.07	880
Facility Electrical Systems	823.09	894
Facility Mechanical Systems	823.08	894
General Requirements	823.05	868
Submittals	823.06	869
Falsework	101.03, 817	9, 746
Federal Aid Participation	107.05	70
Fences	705, 1010	374, 991
	1018.15	1045
Fertilizer	718, 1004	432, 964
Field Laboratories	722	451
Finishes		
Concrete Surfaces	805.08	628
Structural Metals	807.04.6	650
Flowable Fill	710	389
Fly Ash	901, 1001.04	911, 933
Force Account Work	101.03, 104.02,	9, 33
	109.04.3	106
Foreign Materials	106.08	64
Forms, Portland Cement Concrete	601,805,817	306,617,746
Release Agent	1018.06	1041

G

Galvanizing	811.08, 1008	712, 982
	1009	988
General Information, Definitions and Terms	101	2
Acronyms and Abbreviations	101.02	2
Definitions.	101.03	4
Understood Words or Expressions	101.04	16
Voice/Mood and References	101.01	2
General Requirements, Structures	801	532
Geotextile Fabric and Geocomposite Systems	1019	1047
Granular Material	723, 1003	453, 947
Ground Granulated Blast Furnace Slag	901, 1001.05	911, 934
Ground Rod Assembly	705, 1010	374, 991
Guarantees and Warranty of Contractor’s Work	104.05	38
Guard Rail	704, 1010	371, 991

	Section	Page
H		
Handicapped Curb Ramps	706	378
Heating, Ventilation, and Air Conditioning	821.08	837
Highway, Street or Road	101.03	10
Highway-Railway Provisions	107.08	71
Hydro-Seeding	739	522
I		
Incidental Work	101.03	10
In-Place Cement Stabilized and Treated Base Courses	303	181
In-Place Cement Treated Subgrade	309	211
Inspection of Work	105.11	48
Inspector	101.02, 105.10	2, 48
	105.12	49
Instrumentation and Evaluation	829	901
Insurance	107.02	67
Invitation for Bids (See Advertisement)	101.03	10
Irregular Bids	102.08	22
J		
Jacked or Bored Pipe	728	463
Job Mix Formula	501.05, 502.03,	225, 239
	502.04	240
Joint Systems		
Concrete Pipe	701, 1016	349, 1032
	1018.03	1020
Metal Pipe	701, 1007	330, 958
	1018.03	1040
Plastic Pipe	701, 1006	349, 976
	1018.03	1020
Junction Box	702, 822	362,867
L		
Landscaping	719	434
Legal Relations and Responsibility to Public	107	67
Air Navigation	107.15	82
Anti-Trust	107.25	86
Archaeological Findings and Unmarked Burials	107.27	87
Barricades and Warning Signs	107.10	79
Contractor's Payrolls	107.26	87
Contractor's Responsibility for Work	107.19	84
Damage Claims	107.17	83
Environmental Protection	107.14	81

	Section	Page
Federal Aid Participation	107.05	70
Forest Protection	107.13	81
Furnishing Right-of-Way	107.21	85
Hazard Zones	107.16	83
Laws to Be Observed	107.01	67
Navigable Waters and Wetlands	107.09	77
No Waiver of Legal Rights	107.23	86
Opening Sections to Traffic	107.18	83
Patented Devices, Materials and Processes	107.03	69
Permits, Licenses, Taxes and Insurance	107.02	67
Personal Liability of Public Officials	107.22	86
Preservation of Public and Private Property	107.12	80
Public Convenience and Safety	107.07	71
Railway-Highway Provisions	107.08	71
Restoration of Surfaces Opened By Permit	107.04	70
Sanitary, Health and Safety Provisions	107.06	70
Third Party Liability	107.24	86
Use of Explosives	107.11	79
Utility Property and Services	107.20	85
Liability		
Contractor	105.18, 107.03,	53, 69
	107.08, 107.19,	71, 84
	108.08	94
Public Officials, Personal	107.22	86
Third Party	107.24	86
Licenses	102.02, 107.02	18, 67
Lime	718, 1004	432, 964
	1018	1040
Lime Treatment	304	192
Load Restrictions	105.14	50
M		
Mailboxes and Mailbox Supports	735	494
Maintenance		
Roadway	105.15, 105.16	51, 51
Traffic	104.03	37
Manholes	702, 1013	362, 999
Markers, Raised Pavement	731, 1015	477, 1011
Markings, Pavement	713,732,1015	400,480,1011
Masonry Units	1018.12	1042
Mass Concrete	901	911
Materials	(See specification sections)	
Measurement and Payment	109	101
	(Also see specification sections)	
Mechanical Systems	821	794

	Section	Page
Counterweight Ropes for Vertical Lift Bridges	821.07.33	827
Gen. Construction Requirements for Movable Bridges	821.07	806
General Requirements	821.05	798
Heating, Ventilation, and Air Conditioning	821.08	837
Mechanical Construction Requirements for Facilities	821.08	837
Mechanical Operation and Maintenance Manual	821.06.6	804
Mechanical System Submittals	821.06	801
Sewage Treatment Facilities	821.08	837
Sewer Lift Stations	821.08	837
Mechanically Stabilized Earth Wall (MSEW)	802.05.2	541
Metal Pipe	1007	978
Metals	1013	999
Microsilica (Silica Fume)	901, 1001	911, 933
Milling, Asphalt Pavement	509	299
Miscellaneous Materials	1018	1040
Mix Release Agent	1018.10	1042
Mobilization	727	461
Movable Bridges	820	766
Construction of Counterweight	820.07.6	773
Construction Requirements	820.07	772
Construction Requirements for Bascule Span Bridges	820.10	792
Construction Requirements for Swing Span Bridges	820.08	777
Construction Requirements for Vertical Lift Bridges	820.09	785
Final Inspection, Setup, and Testing of Mechanical and Electrical Systems	820.07.9	776
Installation of Alignment Critical Mechanical Equipment	820.07.7	775
Submittals	820.06	770
System Integrator	820.05.4	769
Temporary Operation and Maintenance of Movable Span	820.07.8	775
Training	820.07.10	776
Mulch	716,719,738	425,434,488
	1004	964
Mowing, Trimming and Debris Collection	721	447
Mycorrhizal Inoculant	719, 1004.06	434, 967

N

Navigable Waters and Wetlands	107.09	77
Non-Shrink Grout	1018.04	1041
Notice to Proceed	101.03, 103.08	11, 31
	108.02	89

O

Orthotropic-Deck Bridges	807.06.1	674

P

	Section	Page
Paint	1008	982
Painted Traffic Striping	737, 1015	515, 1011
Painting and Protective Coatings	811	687
Application	811.06.5	705
Cleaning and Painting Other Items	811.07	710
Cleaning and Painting Structural Metalwork	811.06	697
Failure to Complete Work on Time	108.08, 811.10	94, 722
Field Painting	811.06.2	698
Galvanizing and Metallizing Metal Parts and Surfaces	811.08	712
Materials	811.03	687
Protection of the Environment, Public, and Workers	811.09	713
Shop Painting	811.06.1	697
Submittals	811.05	690
Surface Preparation	811.06.4	699
Patents	107.03	69
Pavements	501,502,507	223,234,289
	510, 601, 901	302,306,891
Payment	(See specification sections)	
Pay Item, Interpretation of	102.05	20
	(Also see specification sections)	
Permeable Bases	307	206
Permits	107.02, 107.09	67, 77
Pier Protection Systems		
Marine	818	755
Vehicular	810	684
Piles	804	591
Construction Requirements	804.07	598
Construction Site Survey	804.11	607
Drive System Components and Accessories	804.05.2	596
Field Testing Piles	804.10	603
Pile Construction Log	804.03.3	594
Pile Installation Plan	804.03.1	591
Splicing Piles	804.06.2.4	598
	806.06	643
Submittals	804.03	591
Unsatisfactory Piles	804.08	602
Vibration Monitoring	804.13.12	614
Pipe		
Culverts	701	349
Concrete	701, 1016	349, 1032
Jacked or Bored	728	463
Metal	701, 1007	349, 978
Railings	810	684
Storm Drains	701	349
Thermoplastic	701, 1006	349, 976

	Section	Page
Underdrains	703	366
Plans	105.02, 801.04	41, 532
Plant Inspection	106.06, 503, 901	64, 270
	901	911
Plastic Pavement Markings	732, 1015	480, 1011
Portland Cement and Cementitious Materials	1001	933
Portland Cement Concrete	901	911
Portland Cement Concrete Pavement	601	306
Precast Concrete	805.09	632
Precast Reinforced Concrete Drainage Units	1016	1032
Prestressed Concrete	805.09	632
Prosecution and Progress	108	88
Commencement of Work	108.02	89
Construction Progress Schedule	108.03	89
Default of Contract	108.09	96
Determination and Extension of Contract Time	108.07	92
Failure to Complete on Time	108.08	94
Labor, Means, Methods, and Equipment	108.06	91
Limitation of Operations	108.05	91
Prosecution of Work	108.04	89
Subletting of Contract	108.01	88
Termination of Contract	108.11	98
Termination of Contractor's Responsibility	108.10	98
Public Convenience and Safety	107.07	71
Public Officials, Personal Liability of	107.22	86

Q

Quality Control (See Quality Assurance)	101.03	12
(Also see specification sections)		
Quantities, Interpretation of	102.05, 109.01	20,101
(Also see specification sections)		

R

Raised Pavement Markers	731	477
Reinforcing Steel	806, 1009	641, 988
Relocating Structures	202.04	118
Removing Environmentally Sensitive Materials	202.05	119
Removing Structures	202.03	117
Repair and Rehabilitation (Structural)	830	904
Revetments	712	396
Right-of-Way Monuments	708	385
Riprap	711	392
Roadbed	101.03, 306	12, 204
Roadway Barriers	810	684

	Section	Page
Rubblizing Portland Cement Concrete Pavement	734	488
S		
Sacked Concrete Revetment	712	396
Safety	107.06, 107.07	70, 71
Sampling and Testing	106.03	62
(Also see specification sections)		
Sanitary Provisions	107.06	70
Sanitary Sewer System (Supplemental Specification)	742	528
Scarifying and Compacting Roadbed	306	204
Scope of Work	104	32
Alteration of the Contract	104.02	33
Change in Character of Work	104.02.3	35
Differing Site Conditions	104.02.1	34
Eliminated Items of Work	104.02.4	36
Extra Work	104.02.5	36
Final Cleaning Up	104.04	38
Guaranty and Warranty of Work	104.05	39
Intent of Contract	104.01	32
Maintenance of Traffic	104.03	37
Suspension of Work	104.02	33
Seeding	717, 1004	428, 964
Sewage Treatment Facilities	821.08	837
Sewer Lift Stations	821.08	837
Sewer Pipe	701, 742	349, 528
Sheet Piles	802.05	544
Sidewalks, Concrete	706	378
Signs and Pavement Markings	713,729,731, 732,737,1015	400,466,477 480,515,1011
Sodding	714	420
Slip-Form Paving Method	601	306
Soil Cement Base Course	301, 302, 303	151,168,181
Special Provisions	101.03	14
Specifications		
Conformity with	105.03	43
Coordination and Precedence.	105.04	44
Definition	101.03	13
Examination of	102.06	20
Stakes, Construction	105.08	47
Steel Grid Flooring	808	679
Stone Matrix Asphalt	502	234
Storm Drains	701, 702 1006, 1016	349, 362 976, 1032
Structural Concrete	805, 901	617, 911
Concrete Surface Finishes	805.08	628

	Section	Page
Curing	805.06	626
Forms	805.03	618
Formwork and Surface Tolerances	805.03.4	619
Handling and Placing Concrete	805.05	622
Minimum Concrete Cover	805.04	621
Precast Concrete	805.09	632
Removal of Forms and Falsework	805.07	628
Structural Excavation, Backfill and Earth Retaining Systems	802	538
Structural Metals	807	647
Assembly and Erection	807.05	658
Bolts	807.05.1	658
Bolted Connections	807.05.2	661
Fabrication Requirements	807.04	647
Shop Assembly	807.04.8	653
Submittals	807.03	647
Subcontractor	101.03	14
Subgrade Layer	305	199
Subletting of Contract	108.01	88
Submittals	105.02, 801.05	41,533
Electrical Systems	822.06	869
Facilities	823.06	880
Format	801.05.2	533
Mechanical Systems	821.06	801
Movable Bridge	820.06	770
Process	105.02.2, 801.05.1	42, 533
Requirements for Specific Submittals	801.05.3	535
Substructure	101.03	15
Superintendent	101.03, 811.05.1.6	15, 691
Superpave	502	234
Superstructure	101.03	15
Supplemental Agreement	109.03	103
Surety	101.03	15
Surface Tolerance	501,502,601	223,234,306
System Integrator	820.05.4	769

T

Tack Coat	504	283
Taxes	107.02	67
Technician	101.03	15
Temporary Detour Roads and Bridges	725	457
Temporary Erosion Control	204	144
Temporary Traffic Control	713	400
Temporary Works	817	746
Cleaning and Painting Containment Systems	817.03.2.6	749

	Section	Page
Cofferdams	817.03.2.4	748
Falsework and Formwork	817.03.2	747
Temporary Works Designed by the Contractor	817.03.2	747
Temporary Works Designed by the EOR	817.03.1	746
Water Control Systems	817.03.2.5	749
Testing Procedures Manual	101.03	15
Tests	106.03	62
Thermoplastic Pavement Markings	732, 1015	480,1011
Thermoplastic Pipe	701, 1006	349, 976
Thin Asphalt Concrete Applications	501	223
Treated Timber	812	723
Timber, Timber Connectors, and Preservatives	1014	1005
Topsoil	715	423
Traffic Maintenance Surfacing	402	219
Traffic Signals	736, 1020	496, 1051
Traffic Signs and Devices	713,729,1015	400,466,1011
Trimming	721	447

U

Unacceptable and Unauthorized Work	105.13	49
Underdrain Systems	703	366
Understood Words or Expressions	101.04	16
Unsuitable Material	203.04	130
Utilities, Cooperation with	105.06	45
Utility Property and Service	107.20	85

V

Vibration Monitoring	804.12	609

W

Water	1018.01	1040
Water Distribution System (Supplemental Specification)	741	527
Water Management Gel	719, 1004	434, 964
Water Pollution Control	107.09, 107.14, 202.05, 204	77, 81 119, 144
Weather and Temperature Limitations	901.11	924
Welding	809	682
Wetlands Construction	107.09, 107.14, 202.05, 204	77, 81 110, 144
Wire Rope	1009, 1010	988, 991