PART VIII — STRUCTURES

Section No. **Page No.**

801 General Requirements for Structures 532
802 Structural Excavation, Backfill, and Earth Retaining Systems 538
803 Drilled Shafts..... 558
804 Piles 591
805 Structural Concrete 617
806 Deformed Reinforcing Steel 641
807 Structural Metals 647
808 Steel Grid Flooring 679
809 Welding 682
810 Bridge Railings, Hand Railings, Permanent Roadway Barriers, and Pier Protection Systems 684
811 Painting and Protective Coatings 687
812 Treated Timber 723
813 Concrete Approach Slabs 728
814 Bearings..... 731
815 Joints 737
816 Bridge Drainage Systems 743
817 Temporary Works 746
818 Marine Pier Protection 755
819 Reserved 765
820 Movable Bridges 766
821 Mechanical Systems 794
822 Electrical Systems 867
823 Facilities 879
824 Reserved 896
825 Reserved 897
826 Reserved 898
827 Reserved 899
828 Reserved 900
829 Instrumentation and Evaluation 901
830 Repair and Rehabilitation..... 904

Section 801
General Requirements for Structures

801.01 DESCRIPTION. This section sets forth general content for plans and requirements for submittals and project documentation.

801.02 ACRONYMS AND ABBREVIATIONS. See 101.02 for additional acronyms and abbreviations.

CADD	Computer Aided Design and Drafting
EOR	Engineer of Record
PDF	Portable Document Format

801.03 DEFINITIONS. See 101.03 for additional definitions.

Assembly Drawings. Drawings produced by the contractor that show how items will be assembled and installed on the project.

Bridge Engineer. Either the Bridge Design Engineer Administrator or the Bridge Maintenance Engineer Administrator, depending on design responsibility.

Cut Sheet. Information provided by the manufacturer related to a particular manufactured item.

Shop. A facility where items are fabricated, assembled, and/or tested.

Shop Drawings. Drawings produced by the contractor that show how the shop intends to fabricate items.

801.04 PLANS. Plans will be in accordance with 105.02.1, and include all original contract drawing sheets and other information sheets produced by the Department prior to bid, and change order sheets produced by the Department or the contractor after the bid.

Plans may include special details, standard plans, traffic data, construction phasing, geotechnical data, hydraulic data, hydrographic data, as-built plans for existing structures, environmental commitments, permit and coordination requirements, contact information for other agencies, and other details determined by the designer to be beneficial to bidding and construction.

Refer to 105.04 for order of precedence for contract documents.

801.04.1 Geotechnical Data: Geotechnical data may be provided by the Department in accordance with 102.06. Geotechnical data may include soil borings, soil analyses, and other soil investigations.

If actual subsurface conditions differ materially from those indicated on the plans, promptly notify the Bridge Engineer in writing of the specific differing conditions before further disturbing the site and before performing additional work.

801.04.2 Equal or Better Item Substitutions: Manufactured items identified on the plans by indicating a manufacturer and part number shall be considered to be followed by the phrase "or item of equal or better quality and function."

Items submitted as equal or better substitutions shall provide quality and function equal to or better than that specified in the contract. Redesign, modifications, and/or replacement of other items to accommodate the installation and operation of a submitted item is the responsibility of the contractor, and shall be provided at no additional cost or contract time to the Department. Coordination with interfacing disciplines affected by the submitted item is the responsibility of the contractor.

801.04.3 Change Order Plan Sheets: Change order plan sheets will become part of the contract in accordance with 801.06 and shall conform to the Department's CADD Standards.

801.04.4 Notations for Specific Plan Sheets

801.04.4.1 Mechanical Plans: Contract plan sheets noted with an "M" indicate mechanical plans.

801.04.4.2 Electrical Plans: Contract plan sheets noted with an "E" indicate electrical plans.

801.04.4.3 Architectural Plans: Contract plan sheets noted with an "A" indicate Architectural plans.

801.05 SUBMITTALS. Submittals shall be in accordance with the following unless otherwise specified. Furnish submittals for review or record to the Project Engineer and the Bridge Engineer in accordance with 105.02.2.

A working drawing submittal for review will require each sheet to go through the review process. The submittal review process is not complete until each sheet is stamped accepted.

The Department reserves the right to request the submittal of additional information even if the requested information was not specified in the contract.

801.05.1 Processes: Conform to 105.02.2 for submittals and the following.

801.05.2 Formats: Produce working drawing submittals using CADD software. Contract plan sheets shall not be used for working drawings. CADD

files shall be formatted to print on a full scale sheet. Working drawings shall follow established industry standards, symbols, and detailing techniques, and shall be legible when reduced to half scale. Sheets that are cluttered and difficult to read may be rejected. Each sheet shall have a title block indicating the state project number, project name, parish name, contractor's name, sub-contractor's name, and a revision block to record the number and date of each revision. Previously submitted sheets shall have changes noted by either revision symbols or drawing a cloud surrounding the change with changes noted in the revision block.

Non-drawing submittal documents (cut sheets, calculations, test reports, etc.) shall be formatted to print on letter size sheets. Each submittal sheet shall display the state project number, project name, parish name, contractor's name, sub-contractor's name, manufacturer's name, and the sheet and item number from the contract plans.

801.05.2.1 Electronic: Unless otherwise approved by the Bridge Engineer, transmittal of submittals shall be done electronically.

Transmit submittals to the Department electronically in Portable Document Format (PDF) format. Prepare PDF files using 300 dpi minimum resolution, ISO 32000 (or newer) PDF electronic file, or as specified. Use higher resolution if required for clarity. CADD drawings shall be electronically converted directly to PDF. Other submittals that are converted to PDF from a paper copy shall be scanned at a minimum resolution of 300 dpi.

Group related submittal sheets into an individual PDF file.

Grayscale PDF files are preferred. Use color PDF files if required for conveyance of information.

Transmit electronic files through an approved file transfer system or other approved method.

When e-mails are used to transmit submittals or other project information, list the state project number, project name, and a brief description of the content in the subject line, e.g., "H.001498 Company Canal Bridge – Span Lock Shop Drawings."

801.05.2.2 Paper Reproductions: Print paper reproductions directly from the PDF file returned by the Department showing the "Accepted in accordance with LSSRB 105.02" stamp, reviewer initials, and date reviewed. No modifications are allowed without resubmittal.

Ink and toner for all paper reproductions shall be black or color as required, and shall be permanent as defined by industry standards. Normal handling and stacking shall not cause the print to smear or rub off.

801.05.2.2.1 Full Scale Sheets: Full scale sheets shall have an outside edge measuring 22 inch x 34 inch, a 0.50 inch margin on the top, bottom, and right hand side of the sheet, and a 2.0 inch margin on the left hand side of the sheet.

Provide high quality, opaque, white bond paper with a minimum 24 pound weight and a minimum 95 percent brightness.

801.05.2.2.2 Half Scale Sheets: Half scale sheets shall have an outside edge measuring 11 inch x 17 inch. Drawings shall be an exact 50 percent reduction of the full scale drawing. Provide a 0.25-inch margin on the top, bottom, and right hand side of the sheet, and a 1.0 inch margin on the left hand side of the sheet.

Provide high quality, opaque, white bond paper with a minimum 24 pound weight and a minimum 95 percent brightness.

801.05.2.2.3 Letter Size Sheets: Letter size sheets shall have an outside edge measuring 8.5 inch x 11 inch.

Provide high quality, opaque, white bond paper with a minimum 20 pound weight and a minimum 95 percent brightness.

801.05.3 Requirements for Specific Submittals: Conform to 801.05 and as amended in respective sections of the *Standard Specifications*.

801.05.3.1 Shop Drawings: Submit shop drawings electronically to the Bridge Engineer for review for all fabricated items. When specified, submit shop drawings directly to the Engineer of Record and copy the Bridge Engineer on all correspondence and transmittals.

Prepare shop drawings under the direct supervision of the shop that will perform the work. Do not use contract plan sheets as shop drawings.

For bidding purposes, allow a review period of 14 calendar days per 50 sheets, but a minimum of 14 calendar days per each submittal and per each resubmittal. Review periods for separate submittals are not concurrent.

Provide a shop drawing submittal schedule to the Bridge Engineer prior to the preconstruction conference.

For drawings returned for correction, indicate changes made by placing a reference symbol near the change and note in the revision block. Resubmit to the Bridge Engineer for review. Drawings with unmarked or unnoted changes will be returned without review.

Provide five full scale paper reproductions of the electronically distributed accepted shop drawings to the Bridge Engineer for Department internal distribution and archiving. If the contractor's quality control procedures require modifying the accepted file to indicate release for

fabrication, submit the modified file for review, stamping and electronic distribution. Print paper reproductions directly from the accepted final electronic submittal without modifications.

801.05.3.1.1 Structural Metals: Provide, as a minimum, the following information.

Show material types, sizes, and dimensions; camber and layout information; locations, types, and sizes of welds; locations, types, and dimensions of connections; locations and sizes of bolts and holes; identification and requirements for fracture critical members; coating requirements; shop assembly; and information required by the contract.

801.05.3.1.2 Precast Concrete: Provide, as a minimum, the following information.

Show material, details, and dimensions of members; details of casting bed layouts; and all holes, appurtenances, attachments, devices, etc.

For prestressed and post-tensioned members, show stressing data, location and method of holding draped strands, debonding details, and method and sequence of strand detensioning.

801.05.3.1.3 Sign Structures and Devices: Provide, as a minimum, the following information.

Show material types and sizes; equipment type and sizes; sign structure part details and mounting brackets; location type and size of welds; and location type and dimensions of connections.

Show required dampers for aluminum overhead sign trusses.

801.05.3.1.4 Illumination Systems and High Mast Towers: Provide, as a minimum, the following information.

Show connections, bases, welds, anchor bolts, handhole reinforcement, and erection procedures. Conform to 801.05.3.1 for structural metals.

Electrical system components shall be in accordance with Section 822.

801.05.3.2 Transportation and Erection Plan: Provide to the Bridge Engineer for review, as a minimum, the following information.

Show means and method of transportation; drawings with dimensions and erection marks to properly coordinate with shop drawings; location of each girder in each span; erection sequence, procedures and equipment; falsework location and sequence of field splices; and calculations supporting the proposed method of transportation and erection. Use member designations from the plans. For precast members, show date of casting on one end of member.

Transportation and erection plans shall be designed, sealed, and dated by a professional engineer registered in Louisiana.

801.05.3.3 Shipping Statements and Shop Bills: Submit to the Project Engineer at least one paper copy of shipping statements or notices as each shipment of structural metal is delivered to the project. Show weights of individual members on shipping statements.

801.05.3.4 Color and Material Samples: Submit to the Bridge Engineer for review color and material samples as indicated on the plans.

801.05.3.5 Sign Face: Submit electronically for review to the Traffic Engineer Division Administrator sign face details. Acceptance and distribution of the paper reproduction of the accepted submittal is required prior to submittal of drawings for fabrication and erection of the corresponding sign support structures.

Section 802
Structural Excavation, Backfill and Earth Retaining Systems

802.01 DESCRIPTION. Excavate materials necessary to facilitate construction. Furnish, place, and compact backfill. Dispose of excess excavated material and obstructions in accordance with Section 202, as directed by the Project Engineer, so that such activities will neither adversely affect hydraulics nor be unsightly.

Furnish and install sheeting of the type, size, dimensions, and locations specified meeting the required penetration and resistance with an undamaged cross-section. Design, furnish, and construct Mechanically Stabilized Earth Walls (MSEW) in conformance with the lines, grades, design, geotechnical requirements, and dimensions shown on the plans and the MSEW specifications.

802.02 MATERIALS. Comply with the following unless otherwise specified:

Concrete	901
Coal Tar Epoxy-Polyamide Paint	1008.04
Reinforcing Steel	1009
Hardware	1013
Metal Sheet Piles	1013.10
Timber and Preservatives	1014

802.03 STRUCTURAL EXCAVATION.

802.03.1 General Requirements: Excavations shall be shored, sheeted, or braced in accordance with 701.03 or as required.

With the approval of the Project Engineer, formwork for footings may be omitted when the control of water is sufficient to allow construction in the dry. In such cases, provide excavation to plan dimensions.

When required, provide water control in accordance with Section 817.

802.03.2 Preservation of Channel: Unless approved by the Project Engineer, do not excavate outside of sheeting, cofferdams, cribs, or caissons or disturb the natural stream bed adjacent to the structure. If excavating or dredging at the site of the foundation, then, under agreement with permitting agencies and the Project Engineer, backfill such excavation to the original

ground surface or river bed with satisfactory material after the foundation is in place. Remove excess material deposited within the area of the stream and return channel to its natural state.

802.03.3 Preparation of Footing Foundations: Do not make final removal of foundation material to grade until just before concrete is placed.

For soft foundation material, add compactable material to provide a firm foundation for footing. Clean hard foundation material of loose material and cut to a firm level, stepped, or roughened surface, as directed.

802.03.4 Water Control: Excavations below the groundwater table or water level will require water control to permit construction in the dry and maintain stability of the excavation base and sides. Control water infiltrating the excavation with sheeting, sumps, pumps, seals, cofferdams, well point systems or other accepted methods.

Submit the proposed method of water control to the Project Engineer for record. Conform to Section 817 for temporary works.

802.04 BACKFILL. For MSEW backfill, comply with 802.05.2.

Provide backfill material of acceptable quality, free from large or frozen lumps, wood or other foreign material.

Backfill all excavated spaces to natural ground maintaining uniform lateral loading.

Backfill reinforced concrete box culverts and attached headwalls in accordance with 701.08. Provide adequate cover over reinforced concrete box culverts before heavy construction equipment may cross the installation to prevent damage to the box culvert.

Place backfill material in a dry excavation for footings in horizontal lifts and compact to the satisfaction of the Project Engineer.

Place backfill material in a dry excavation for other structures in horizontal layers not exceeding 9-inch loose thickness and uniformly compact by approved methods to the satisfaction of the Project Engineer. Jetting of backfill behind abutments and wingwalls will not be permitted.

Do not place backfill against a concrete abutment, wing wall, or reinforced concrete box culvert until concrete has been in place a minimum of 14 calendar days, or until test cylinders made in accordance with DOTD TR 226 and tested in accordance with DOTD TR 230 have obtained a minimum compressive strength of 3000 psi.

802.05 EARTH RETAINING SYSTEMS.

802.05.1 Sheet Piles: Concrete sheet piles shall be precast-prestressed piles fabricated in accordance with 805.09.

Steel sheet piles shall be fabricated in accordance with Section 807.

Timber sheet piles shall have tongues and grooves of suitable proportions, either cut from the solid material or made by building up the piles with three planks fastened together. Piles shall be drift-sharpened at their lower ends to wedge adjacent piles tightly together during driving. Treated timber shall be either Southern Pine or Douglas Fir, complying with Section 812. Use galvanized hardware.

802.05.1.1 Permanent Sheeting: Provide new sheeting as shown in the contract plans. Clean and apply corrosion protection in accordance with 802.05.1.4**.**

802.05.1.2 Temporary Sheeting: Where contract plans require temporary sheeting, the plans will specify the required design for sheeting. Sheeting may be new or used and will not require corrosion protection. Typically, remove sheeting when no longer required. However, when impractical to remove or when required on the plans, sheeting may remain in the completed work.

802.05.1.3 Contractor Sheeting: Sheeting used at the contractor's option shall be in accordance with Section 817, "Temporary Works." The contractor shall be responsible for the design and details of the sheeting. Sheeting may be new or used, not require corrosion protection, and shall be removed when no longer needed unless otherwise approved.

802.05.1.4 Corrosion Protection: Before driving sheeting which requires corrosion protection, clean and paint, or galvanize surfaces of steel sheet piling from the top of the sheet pile to a point 10 feet below the ground or mudline. Clean in accordance with Section 811 using Commercial Blast Method. Paint using a two coat coal-tar epoxy-polyamide paint system or galvanize in accordance with Section 811.

802.05.1.5 Driving: Drive sheet piles with hammers adequate to drive the piles to required depth in satisfactory condition, in accordance with Section 804. To maintain satisfactory alignment, drive sheet piles in increments of penetration necessary to prevent distortion, twisting out of position, or pulling apart at interlocks. Extract sheet piles damaged during driving, or driven out of proper position or driven below cut-off elevation, and replace with new piles at no additional cost or time to the Department. The contractor assumes full responsibility for any damage, settlement, or

movement of adjacent structures or embankment settlement caused by the pile driving operation.

Use of jets, pre-boring, or vibratory hammer will require written approval of the Project Engineer. If the sheeting is used to support the structure, vibratory hammers will not be allowed for driving.

802.05.1.6 Cut-offs for Sheeting to Remain in Place: Cut off tops of sheet piles or drive to a straight line at the elevation indicated on the plans or as directed. If heads of sheeting are appreciably distorted or otherwise damaged below cut-off level, remove and replace damaged portions.

Treat tops of timber sheet piles after cut-off in accordance with 812.06 or use bent down galvanized metal coverings. Bend down coverings at least 3 inches on each side and nail to the vertical surface of sheet piles with large-headed galvanized roofing nails.

802.05.2 Mechanically Stabilized Earth Wall (MSEW): Two categories of MSEW systems are permitted: Modular Concrete Block and Panel walls. Adhere to the design details for the MSEW structures such as specified geogrid, strip, or mesh; facing element dimensions; loading conditions; leveling pad dimensions; temporary surcharge retaining walls; and details for appurtenances. Value engineering proposals for other MSEW systems will not be considered. Only approved MSEW systems will be considered. The list of approved MSEW systems, MSEW system approval policy, and the MSEW design guide are available at the Department's Pavement and Geotechnical Services web site.

802.05.2.1 MSEW Submittals: Comply with 801.05.

1. MSEW Design Package

Submit to the Project Engineer the MSEW Design Package for review. Allow 45 calendar days for each review cycle. Affix a legible seal, date, and signature of the responsible Professional Engineer registered in the State of Louisiana. Do not begin any fabrication or construction prior to written acceptance of the MSEW Design Package.

Include computer generated design and working drawings.

Include a copy of the computer program with a complete and legible hand calculation check for the most critical geometry and loading condition that will govern the design of the MSEW for verification of the accuracy of the computer generated solution. Document all loading conditions, design calculations, and assumptions. For all calculations, include all load cases that exist at completion and during construction for any required surcharges, hydraulic conditions, live loads, and loading combinations. Include a

summary of the design computations indicating design section, geometry, loadings, and analysis results.

Include working drawings showing horizontal and vertical alignment of the walls and the existing and proposed ground lines shown in the contract plans. Clearly show the vertical bearing pressures exerted by the MSEW structure corresponding to wall heights and reinforced backfill lengths. Show all information needed to fabricate and erect the walls including:

1. Existing ground elevations that have been verified by the contractor for each location
2. MSEW profile elevation showing at least the following: top of the leveling pad elevations, maximum bearing loads, and top of wall elevations.
3. Details of all joints, including slip joints, indicating type, size, and manufacturer
4. Details of wall batter
5. Shape, dimensions and details of facing elements
6. The number, size, type, and details of the soil reinforcing elements
7. Details of facing/reinforcement connections
8. Details showing location and installation of geotextile fabric
9. Details of the leveling pad showing dimensions
10. Finishing details at the top of wall (i.e., cap block, coping)
11. Details at miscellaneous obstructions (i.e., utility conduits) located below the ground surface
12. Details at bridge foundation obstructions including pilings
13. Wall termination and interface details, including compaction requirements
14. Dimensions of structural backfill required
15. Any additional details pertaining to coping, railing, temporary facing, and internal drainage, as required by the contract plans.

2. <u>MSEW Certification Package</u>

Submit to the Project Engineer the MSEW Certification Package for review. Allow 21 calendar days for each review cycle. Do not deliver soil reinforcement or facing elements to the site without written acceptance of the MSEW Certification Package.

Submit a Certification Package prepared by the MSEW supplier or MSEW component manufacturer. Document certified values as indicated in the Department's MSEW Design Guide. Include a Certificate of Compliance

that certifies the following meet or exceed MSEW design requirements (as applicable to the MSEW system):

1. Ultimate tensile strength of soil reinforcement (T_{ULT})
2. Allowable tensile load of soil reinforcement (T_a)
3. Allowable connection load between the facing element and the soil reinforcement (T_{ac})
4. Soil reinforcement pullout coefficients meet or exceed the MSEW's required design (F*, α)

The Department will perform testing in case of a dispute over the validity of values. For tests not performed by the Department, supply test data from an approved laboratory to the Project Engineer to support the certified values. Perform additional tests at no added cost or time to the Department. If the required documentation is not provided for individual reduction factors (RF) or pullout coefficients (F*, α), use default values for these design parameters in accordance with the Department's MSEW Design Guide. Indicate the use of default values in the Certificate of Compliance.

3. <u>MSEW Facing Element Concrete Mix Design</u>

Submit to the Project Engineer the concrete mix design for review. Allow 21 calendar days for each review cycle.

802.05.2.2 MSEW Design: The plans will specify a minimum reinforced backfill length that satisfies the external stability of the MSEW system.

Design MSEW structures as gravity walls for internal stability of the reinforced backfill. Design internal stability for the required reinforced backfill length and strength, facing/soil reinforcement connection strength, and facing stability. Specify the minimum required wall face batter to limit the amount of horizontal movement resulting from the outward rotation of the wall.

Design any temporary MSEW facings required during phased construction, temporary surcharge retaining walls located above the permanent MSEW structure, or other temporary construction systems that are required to build the permanent MSEW.

Design permanent MSEW and temporary construction systems in accordance with the Department's MSEW Design Guide and current edition of the *AASHTO LRFD Bridge Design Specifications*. The Department will not accept designs based on methodology other than required by these specifications.

Provide top of wall elevations in accordance with the plans, except an increase of up to 8 inches may be allowed, and will be at no additional cost or

time to the Department. Design top of wall elevations to allow for proper interfacing with barriers, copings, surface ditches, bridge abutments, etc. as shown in the plans.

Provide top of leveling pad elevations in accordance with the plans, except an increase in the embedment depth of the pad of up to 20 inches may be allowed, and will be at no additional cost or time to the Department. Set leveling pad elevations to allow for transverse and longitudinal drainage structures shown on the plans.

Do not terminate wall over pile supported foundations.

802.05.2.3 MSEW Materials: Provide all applicable materials and components such as the facing elements, reinforced backfill materials, backfill reinforcement, geotextile fabric, facing aggregate, internal drainage system (if required), and all other necessary components.

1. Facing Elements

Provide a Certificate of Delivery for each shipment of facing elements listing particular lots shipped.

Provide portland cement concrete with a minimum 28-day compressive strength of 4,000 psi and a maximum water absorption limit of 6 percent. Furnish admixtures conforming to 1011.02.

a. Casting

Notify the Fabrication Inspection unit of the Construction Division at least 7 days prior to the production of facing elements.

For modular concrete block walls, cast blocks in rigid molds in a manner that will assure the production of uniform elements. Place concrete in each block without interruption and consolidate by the use of an approved method. Clearly mark each lot with the date of manufacture, lot number, and type of block in accordance with the accepted MSEW system drawings. Steam cure the blocks for a minimum of 24 hours. Do not ship blocks before reaching a minimum compressive strength of 4,000 psi.

For panel walls, cast panels on a flat surface with the front face of the panels at the bottom and the back face facing upward. Set tie strips or welded mesh connectors into the rear face. Place concrete in each unit without interruption and consolidate by the use of an approved vibrator, supplemented by such hand tamping as necessary to force the concrete into the corners of the forms. Clearly scribe the date of manufacture and panel identification number on the rear face of each panel. Cure panels with wet burlap for a minimum of 72 hours. Leave forms in place until they can be removed without damage to the panel. Panels will be considered acceptable based on the compression

tests and by visual inspection. Use Grade 60 reinforcing steel in accordance with Sections 806 and 1009.

b. Finish and Tolerances

Furnish tan (sandstone) modular concrete blocks unless another color is shown on the plans. Manufacture modular blocks within the following tolerances:

1. Length: ± 1/8 inch of the specified dimension
2. Width: ± 1/8 inch of the specified dimension
3. Height: ± 1/16 inch of the specified dimension

When a broken or fractured face is required, furnish blocks having a front face dimension within 1.5 inches of the dimension shown on the plans.

In accordance with 805, furnish wall panels with a front face consisting of Class 2, and Class 3 surface finishes and a rear face consisting of a uniform surface finish. Roughly screed the rear face of the panel to eliminate open pockets of aggregate and surface distortions in excess of 1/4 inch. Manufacture panels within the following tolerances:

1. All dimensions: ± 3/16 inch
2. Angular distortion (height): ≤ 0.2 inch in 5 feet
3. Defects on formed surfaces: ≤ 0.1 inch in 5 feet

c. Compressive Strength

Modular concrete block compressive strength will be determined on a per lot basis with random sampling in accordance with ASTM C140. Furnish blocks in lots of no greater than 10,000 blocks and maintain clear lot identification until acceptance of testing results. Furnish compressive strength test results from the manufacturer. Upon request submit test specimens prepared by the manufacturer to the Department for testing. Furnish compressive strength test specimens conforming to the saw-cut coupon provisions of Section 5.2.4 of ASTM C140. The Department will accept block lots when the average compressive strength of three test coupons is 4,000 psi with no individual test having a compressive strength less than 3,500 psi. The Department will reject block lots not meeting the above requirements.

Concrete panel compressive strength will be determined on a per lot basis with random sampling. Identify concrete lots no greater than 50 cubic yards for compressive strength testing. For each lot, create a compressive strength sample consisting of six cylinders made in accordance with DOTD TR 226. Submit test specimens to the Department for testing or test cylinders in pairs in accordance with DOTD TR 230 and furnish compressive strength results to

the Project Engineer. The Department will accept panel lots when the average compressive strength of a pair of tested cylinders achieves 4,000 psi within 28 days. The Department will reject panel lots not meeting the above requirements.

d. Handling, Storage, and Shipping

Handle, store, and ship facing elements in such a manner as to prevent chipping, cracks, fractures, discoloration, and excessive bending stresses. Support stored panels on firm blocking located immediately adjacent to tie strips to avoid bending the tie strips.

The Department will reject facing elements that fail to meet any of the requirements specified above or that exhibit any of the following defects:

1. Defects that indicate imperfect molding.
2. Defects indicating honeycomb or open texture concrete.
3. Cracked or chipped blocks.
4. Color variation on front face of block due to excess form oil or other reasons.

e. Block Fill

When modular concrete blocks require block fill, furnish and construct block fill in accordance with the manufacturer's recommendations. Show the block fill on the shop drawings.

f. Cap Blocks

Unless shown otherwise in the plans, furnish and construct cap blocks consisting of a precast concrete cap placed over the uppermost level of blocks. Secure cap blocks with an epoxy adhesive from an approved source listed in AML. Utilize an epoxy adhesive providing a minimum of 50 percent surface coverage. Do not allow epoxy to drip down the front face of the wall.

g. Coping

If required in the plans, construct a cast-in-place or precast concrete coping or half connector placed over the uppermost level of facing elements or as shown on the accepted working drawings. Utilize a Class A1 concrete conforming to Section 901. Apply a Class 3 special finish to the cast-in-place concrete coping conforming to 805.08 and 1011.03. Utilize Gray for the special finish color unless shown otherwise in the plans.

2. Inextensible Soil Reinforcement

Furnish galvanized steel reinforcing conforming to the required shape and dimensions and free of defects that may impair their strength and durability. The Department will sample and test reinforcing before fabrication or erection of the MSEW structure. Galvanize and repair damaged galvanized coatings in accordance with 811.08 prior to the soil reinforcement installation.

When reinforcing steel strips are specified, provide galvanized steel strips hot rolled from bars to the required shape and dimensions with physical and mechanical properties conforming to ASTM A572 Grade 65.

When reinforcing welded wire mesh is specified, provide galvanized shop-fabricated cold drawn steel wire reinforcing mesh and narrow ladders conforming to AASHTO M 55 and the minimum requirements of ASTM A-82 and welded into the finished mesh fabric in accordance with ASTM A-185. Utilize the same size longitudinal and transverse wires. Apply galvanization after the mesh is fabricated.

3. Extensible Soil Reinforcement

Provide reinforcing conforming to the required shape and dimensions and free of defects that may impair their strength and durability. The Department may sample and test reinforcing before fabrication or erection of the MSEW structure.

a. Geosynthetic Soil Reinforcement

Utilize woven geotextile reinforcement consisting only of long chain polymeric filaments or yarns formed into a stable network. Utilize geogrid reinforcements consisting of a regular network of integrally connected polymer tensile elements with aperture geometry sufficient to permit significant mechanical interlock with the surrounding soil. Use geosynthetic reinforcement having a dimensionally stable structure and able to retain its geometry under construction stresses. Furnish geosynthetic reinforcement with high resistance to damage during construction, to ultraviolet degradation, and to all forms of chemical and biological degradation encountered in the soil being reinforced.

Check the geosynthetic soil reinforcement upon delivery to ensure that the proper material has been received. Label geosynthetic rolls in accordance with ASTM D4873, Guide for Identification, Storage, and Handling of Geosynthetic Rolls. Protect the geosynthetic materials from temperatures greater than 140°F, mud, dirt, dust, and debris during all periods of shipment and storage. Follow the manufacturer's recommendations regarding protection from direct sunlight. The Department will reject any geosynthetic not meeting material specifications or exhibiting defects, tears, punctures, flaws, deterioration, or damage. Replace any deficient or damaged geotextile fabric or geosynthetic reinforcement at no additional cost to the Department.

The Department may submit the test samples collected to an approved independent laboratory for verification testing. Do not construct the MSEW structure until the results of the verification testing indicate that soil

reinforcement delivered to the site is in conformance with these specifications and the approved manufacturer's Certification Package.

If requested by the Department, when the type of geosynthetic soil reinforcement selected requires special equipment and/or testing procedures other than those normally used by the Department, provide special equipment and/or testing procedures to the Department at no additional cost.

4. Reinforced Backfill and Block Backfill Materials

Utilize a select granular reinforced backfill material unless a stone backfill is specified. Use granular and stone backfills from an approved source listed in AML with the following additional engineering properties and material requirements.

When using granular reinforced backfill and modular concrete block fill comply with the following properties:

1. pH values shall range between 5.0 and 9.0 (DOTD TR 430).
2. Organic content shall not exceed 0.5 percent (DOTD TR 413).
3. Internal friction angle shall not be less than the values specified below as determined by the standard direct shear test, AASHTO T236 or the unconsolidated-undrained triaxial test, AASHTO T296. Mold and test samples within 2 percent of the optimum moisture content for the material as determined by DOTD TR 418.

When using granular reinforced backfill and modular concrete block fill or stone with steel soil reinforcement comply with the following electrochemical properties:

1. Resistivity > 3,000 ohm cm (DOTD TR429).
2. Chloride content < 100 ppm (AASHTO T 291).
3. Sulfate content < 200 ppm (AASHTO T 290).

Test backfill material during initial source approval or if a change in the source is requested to ensure all property requirements are met. Sample backfill material once every 1,000 cubic yards and test the gradation and pH. Sample backfill material once every 5,000 cubic yards and test the internal friction angle, organic content, resistivity, chloride content, and sulfate content. When granular backfill is specified, provide a minimum internal friction angle (φ) of 34 degrees and comply with the gradation requirements shown in Table 802-1.

Table 802-1
Granular Backfill Gradation

U.S. Sieve Size	Percent Passing
3/4 inch	100
No. 4	20 - 100
No. 10	15 - 85
No. 40	10 - 35
No. 100	0 - 10
No. 200	0 - 5

When stone backfill is specified, provide a minimum internal friction angle (φ) of 34 degrees, and comply with the gradation requirements shown in Table 802-2.

Table 802-2
Stone Backfill Gradation

U.S. Sieve Size	Percent Passing
1 inch	100
3/4 inch	90 - 100
3/8 inch	20 - 55
No. 4	0 - 10
No. 8	0 - 5

5. Reinforcement Attachment Devices

Furnish galvanized attachment devices conforming to the required shape and dimensions free of defects that may impair their strength and durability. The Department will sample and test the reinforcing and attachment devices prior to fabrication or erection of the MSEW.

Shop fabricate tie strips from hot rolled steel conforming to ASTM A1011, Grade 50. Galvanize and repair damaged galvanized coatings in accordance with 811.08 prior to the soil reinforcement installation.

Furnish galvanized fasteners consisting of hexagonal cap screw bolts and nuts conforming to Sections 807 and 811.

Furnish connector pins and mat bars fabricated from ASTM A36 steel and weld to the soil reinforcement mats. Furnish connector bars fabricated of cold

drawn steel wire conforming to AASHTO M32. Galvanize connector pins and connector bars in accordance with 811.08.

6. Leveling Pad

Construct an unreinforced concrete leveling pad of Class M Concrete conforming to Section 901.

7. Geotextile Fabric

Furnish fabric resistant to chemical, biological, and insect attack conforming to Section 1019, Classes B, C, or D.

8. Free Draining Aggregate

Provide free draining aggregate consisting of crushed stone or crushed gravel and with the specified gradation for stone backfill in accordance with Table 802-2.

9. Geomembrane

If indicated in the plans, furnish a single-layer continuous polymeric sheet manufactured from a virgin polymeric resin conforming to the requirements of Table 802-3.

Table 802-3
Geomembrane

Property	Test Method	Minimum Requirements
Thickness, mils	ASTM D5199	40
Tensile Strength, lb/in.	ASTM D882 1-in. strip	70
Tear Strength, lb.	ASTM D1004 Die C	20
Puncture Strength, lb.	ASTM D4833 modified	40
Impact, ft.-lb.	ASTM D1424 modified	25

802.05.2.4 MSEW Construction Requirements:

1. Wall Excavation and Foundation Preparation

Construct a graded level foundation for the MSEW structure for a width equal to or exceeding the length of the soil reinforcements plus 1 foot or as shown in the plans. Prior to the MSEW construction, compact the foundation with a smooth vibratory wheel roller weighing a minimum of 8 tons for at least five passes or as directed by the project engineer. Remove any

foundation soils found to be unstable by the engineer and replace with backfill material compacted to 95 percent of the maximum dry density in accordance with DOTD TR 415 or TR 418.

2. Leveling Pad Construction

At each MSEW foundation level, provide a precast reinforced or cast-in-place unreinforced concrete leveling pad of the type shown on the plans. Allow the leveling pad a minimum of 12 hours curing time before placement of wall blocks. If permanent MSEW facing is installed in front of a temporary MSEW facing, install the leveling pad just prior to construction of the permanent MSEW facing.

3. MSEW System Supplier's Representative

Provide a qualified and experienced representative from the MSEW system supplier until the project engineer is satisfied that the Department and contractor personnel are proficient with the MSEW construction procedures. Submit representative qualifications to the Department for approval prior to the start of wall construction. Make the representative available as needed by the project engineer during construction of the MSEW structures.

4. Internal Drainage System

Install an internal drainage system behind the wall as indicated in the plans or as shown on the approved working drawings. Place outlet pipes at sags in the flow line, low end of the collector pipe, and other locations as shown or specified. Submit the location and elevation of the internal drainage system to the Project Engineer for approval.

5. Geotextile Fabric

For MSEW systems with modular concrete block facings and granular reinforced backfill, place geotextile fabric between the block fill and the reinforced backfill. If a stone reinforced backfill is used, geotextile fabric is not required.

Place geotextile fabric between natural ground and reinforced backfill. Remove all loose or extraneous material and sharp objects from subgrade that may damage the geotextile fabric during installation. Stretch, align, and place geotextile fabric in a wrinkle-free manner in contact with the soil. Overlap adjacent geotextile fabric edges a minimum of 18 inches.

Repair or replace torn or punctured sections of the geotextile fabric as directed by the project engineer. When repairing geotextile fabric, place a section of fabric that is large enough to cover the damaged area with an overlap of at least 18 inches on all sides.

6. Wall Erection

Place facing elements so that their final position is vertical or battered as shown on the plans. Erect facing elements with a staggered horizontal joint pattern. Place facing elements in successive horizontal lifts in the sequence as directed by the Project Engineer as backfill placement proceeds. Construct MSEW structure using a predetermined backward batter corresponding to the anticipated outward wall deflection as determined by the MSEW system supplier. Adjust batter in the field as directed by the Project Engineer during construction.

If the wall is to interface with another wall that will be constructed after this contract, submit wall interface and embankment compaction details at these locations to the Project Engineer.

As necessary during backfill placement, maintain panels in a vertical position with temporary wooden wedges placed in the joint at the junction of the two adjacent panels on the external side of the wall. Utilize external bracing for the initial lift as required.

Conform to the following tolerances for panel walls:

1. Horizontal and vertical alignment of wall face ± 3/4 inch along any 10-foot distance.
2. Overall Vertical tolerance (plumb) of wall is not to exceed 1/2 inch per 10 feet of wall height from the final wall batter. Negative (outward batter) batter is not acceptable.
3. Maximum allowable out of plan offset at any panel joint ≤ 1/4 inch.

Conform to the following tolerances for modular block walls:

1. Horizontal and vertical alignment of wall face ± 3/4 inch along any 10-foot distance.
2. Overall Vertical tolerance (plumb) of wall is not to exceed 1 inch per 10 feet of wall height from the final wall batter. Negative (outward batter) batter is not acceptable.
3. Maximum horizontal gap between erected blocks < 1/4 inch.
4. Shim or grind to control the elevations of any two adjacent blocks within 1/16 inch.

7. Reinforced Backfill Placement

Place backfill immediately after the erection of each lift of facing elements. Level backfill material to an elevation approximately 1 inch above facing connection before placing each level of soil reinforcement. Avoid damage or disturbance of wall materials when placing backfill. Remove and replace damaged wall materials at no expense to the Department. Assure no voids

exist directly beneath the reinforcing elements during backfill placement near the facing. Compact backfill to 95 percent of its maximum dry density in accordance with Section 203 and DOTD TR 401. Determine optimum moisture content and maximum dry density in accordance with DOTD TR 415 or TR 418. Perform compaction control testing at minimum frequency of one test per every 2 feet of wall height for every 100 lineal feet of wall. Assure a uniform moisture distribution prior to and during compaction of each layer. Place backfill materials at a moisture content less than or equal to the optimum moisture content. Remove and rework backfill material having a moisture content in excess of the optimum until the moisture content is uniformly acceptable throughout the entire lift. Place backfill in 8-inch loose lifts closely following the MSEW facing erection. Decrease lift thickness as necessary to obtain the specified density. Compact backfill without disturbing or distorting the reinforcement. Maintain a minimum of 6 inches of compacted backfill between construction equipment and soil reinforcement or geotextile fabric. Use light mechanical tampers adjacent to the backside of the wall facing, within a 3-foot wide area, to achieved compaction. Do not use Sheep's foot or grid-type rollers for compacting backfill within the reinforced soil zone. Shape the last level of backfill to permit runoff of rainwater away from the wall face at the end of each day's operations. Do not allow surface runoff from adjacent areas to enter the reinforced soil zone until it is protected from infiltration. Repair any damage or movement caused by erosion, sloughing, or saturation of the reinforced backfill or retained backfill repaired at no expense to the Department.

8. Soil Reinforcement Placement

Install soil reinforcement in accordance with the manufacturer's recommendations and these specifications. Place reinforcement within the layers of the compacted backfill material at locations shown on the plans. To prevent damage, place only the amount of soil reinforcement required for immediately pending work. Place reinforcement with the strongest direction perpendicular to the wall face, unless shown otherwise in the plans. Connect reinforcement to MSEW facing in accordance with the MSEW system supplier's recommendations. Place reinforcement flat and apply uniform tension to remove any slack in the connection or reinforcement material.

9. Surcharge

When the plans indicate that an earth surcharge be placed over the reinforced zone, retain the surcharge with a temporary wall. Construct temporary wall with MSEW or other approved method, as accepted by the Project Engineer, at no direct cost to the Department. Place temporary wall

within one foot of permanent wall face. Slope the top surface of the surcharge to allow surface water to drain away from wall. Place a plastic membrane over reinforced zone prior to placing surcharge material. Include materials, placement, removal of the temporary wall, and surcharged materials in the cost of the permanent wall unless indicated otherwise on the plans.

10. Abutment Piling

Adhere to the following requirements and sequence if abutments supported on piling are to be placed in the reinforced zone.

1. Drive all piles within the reinforced zone prior to MSEW installation.
2. Encase each pile in a Smooth Wall Corrugated Galvanized Steel (SWCGS) pipe of sufficient thickness in accordance with AASHTO M 36 to prevent buckling or distortion during placement and compaction of wall backfill. Include this expense in the cost of the wall.
3. Place spacers between the pile and SWCGS pipe to prevent the pipe from coming in contact with the pile during backfilling of the wall.
4. Extend SWCGS pipe from bottom of backfill to bottom of bridge abutment cap.
5. After positioning, seal the top of the SWCGS pipe to prevent debris accumulation during placement of backfill, and keep pipe sealed until filled with granular material.
6. Fill SWCGS pipe loosely with granular material after completion of wall construction as directed and accepted by the Project Engineer.

11. MSEW Structural Excavation and Backfill

Excavate and backfill below the original ground line to facilitate the placement of the reinforced backfill for the MSEW. Furnish and subsequently remove any temporary retaining systems and dewatering systems necessary for execution of the work, and dispose of all excavated materials below the original ground elevation to the final grading line in accordance with plan details and these specifications.

802.06 MEASUREMENT.

802.06.1 Structural Excavation: When a pay item is not provided, excavation will not be measured for payment.

Structural excavation will be measured per cubic yard, based on plan dimensions plus excavation allowance. The excavation allowance is 18 inches outside the neat line of the vertical planes of the footing.

Backfill and disposal of excess excavated material will not be measured for payment.

802.06.1.1 Reinforced Concrete Box Culverts: Excavation and backfill required for box culvert construction will not be measured for payment, except as specified in 203.14.1.

802.06.1.2 Cofferdams: When the Contract does not contain an item for "Cofferdams," the cofferdams and cribs will not be measured for payment.

When an item for "Cofferdams" is included in the Contract, the cofferdams will be measured on a lump sum basis and conform to Section 817, "Temporary Works."

802.06.2 Water Control System: When the Contract does not contain an item for "Water Control System," use an accepted method to control seepage and runoff. The "Water Control System" will not be measured for payment.

When an item for "Water Control System" is included in the Contract, the water control system will be measured on a lump sum basis and shall conform to Section 817, "Temporary Works."

802.06.3 Sheeting: Permanent sheeting will be measured based on the design quantities shown on the plans per square foot.

Temporary sheeting will be measured for payment based on the design shown on the plans per square foot.

Contractor sheeting will not be measured for payment.

Jetting or pre-boring of sheeting will not be measured for payment.

802.06.4 Mechanically Stabilized Earth Wall: Mechanically Stabilized Earth Walls, designed, furnished, installed and accepted, will be measured by plan quantity per square foot of facing, as adjusted for field conditions.

Embankment or reinforced backfill material will be measured per cubic yard as embankment under Section 203.

802.06.5 MSEW Structural Excavation and Backfill: MSEW Structural Excavation and Backfill will be measured on a lump sum basis.

802.07 PAYMENT. Payment for structural excavation, backfill, disposal of excess excavated material, installation and/or removal of sheeting, and earth retaining structures will be made at the contract unit prices which includes all materials, labor, and equipment necessary to complete this item in accordance with the Contract.

802.07.1 Structural Excavation: Payment for structural excavation will be made at the contract unit price per cubic yard which includes required

excavation and backfill, installation and removal of contractor sheeting, and disposal of excess excavated material.

When the required excavation depth is in excess of that specified, payment for the additional excavation required will be made in accordance with Table 802-4.

Table 802-4
Payment for Additional Excavation

Depth of Foundation Excavation Below Specified Elevation (Feet)	Percent of Contract Unit Price for the Excavation Item
0 to 2.0	100
2.1 to 4.0	125
4.1 to 6.0	150
6.1 to 8.0	175
8.1 to 10.0	200
Over 10.0	Extra Work

802.07.2 Sheeting: Payment for permanent and temporary sheeting will be made at the contract unit prices.

802.07.3 Mechanically Stabilized Earth Wall (MSEW): Permanent and temporary MSEW will be paid for at the contract unit price per square foot which includes furnishing design, materials, labor, equipment, and other incidentals required to complete this item. Payment will include, but will not be limited to: modular concrete facing blocks, precast concrete panels, galvanized steel reinforcing and tie strips or galvanized steel mesh and mesh connectors or geosynthetic reinforcement, geotextile fabric, level up concrete, coping, leveling pad, internal and external drainage and dewatering systems, temporary retaining systems, temporary surcharge wall, special backfill material requirements, and removal of temporary items.

Embankment or reinforced backfill material will be paid for as embankment under Section 203. Additional cost associated with its special material requirements will be included in the MSEW item.

802.07.4 MSEW Structural Excavation and Backfill: Excavation below the original ground line and subsequent backfill to the original ground line required for the construction of the MSEW structure will be paid for at the contract lump sum price, which includes all materials, labor, equipment, and other incidentals required for completion of this work. Payment will include, but not be limited to, furnishing and subsequently removing any temporary retaining systems and dewatering systems necessary for execution of the work, and disposal of all excavated materials below the original ground elevation to the final grading line. If no pay item for MSEW structural excavation and backfill is included in the contract, payment will be incidental to the MSEW.

Payment will be made under:

Item No.	Pay Item	Pay Unit
802-01	Structural Excavation (Type)	Cubic Yard
802-02	Permanent Sheeting (Type)	Square Foot
802-03	Temporary Sheeting (Type)	Square Foot
802-04	Mechanically Stabilized Earth Wall	Square Foot
802-05	MSEW Structural Excavation and Backfill	Lump Sum

Section 803
Drilled Shafts

803.01 DESCRIPTION. Furnish and install drilled shafts of the specified type, dimensions, locations, elevations, integrity, and resistance.

803.02 MATERIALS. Comply with the following sections and subsections:

Slurry	803.02
Portland Cement Concrete	901
Granular Material	1003.09
Cold Tar Epoxy Polyamide Paint	1008.04
Reinforcing Steel	1009.01
Concrete Admixtures	1011.02
Permanent Steel Casing	1013.11

803.02.1 Concrete

Use Class S concrete conforming to Section 901 and with the following slump requirements:

Dry placement methods:	5 – 7 inches
Casing removal methods:	8 – 10 inches
Tremie placement methods:	8 – 10 inches

Slump loss of more than 4 inches shall not be permitted during the period equal to the anticipated placement period plus two hours. Slump life may be extended through use of retarders and mid-range water reducers.

803.02.2 Steel Casing: Casing shall be of ample strength to resist damage and deformation from transportation and handling, installation and extraction stresses, and all pressures and forces acting on the casing. Casing shall be watertight and clean prior to placement in the excavation.

803.02.2.1 Permanent Casing: Use steel conforming to ASTM A36 or ASTM A252 Grade 2 unless specified otherwise on the plans. Corrugated casing is not allowed. All splicing of permanent structural casing shall be in accordance with Section 6 of the *LRFD Bridge Design Specifications,* latest edition.The inside diameter of permanent casing shall be as shown on the plans unless a larger diameter is approved by the engineer, at no additional cost to the Department.

803.02.2.2 Temporary Casing: Use smooth wall structural steel casing. The casing shall be capable of being removed without deformation and damaging the completed shaft, and without disturbing the surrounding soil. The inside diameter of temporary casing shall not be less than the specified diameter of the shaft.

803.02.3 Mineral Slurry: Use mineral slurry in conformance with the Drilled Shaft Installation Plan. Conform to Table 803-1.

Table 803-1
Mineral Slurry Requirements

Property	Test	Requirement
Density (pcf)	Mud Weight (Density) API 13B-1, Section 1[1]	64.3[2] to 72.0[2]
Viscosity (seconds/quart)	Marsh Funnel and Cup API 13b-1, Section 2.2[1]	28.0 to 50.0
pH	Glass Electrode, pH Meter, or pH Paper	8.0 to 11.0
Sand Content (percent) immediately prior to placing concrete	API 13B-1, Section 5	4.0 max

[1] American Petroleum Institute (API)

[2] When approved by the engineer, slurry may be used in salt water, and allowable densities may be increased by up to 2 pcf. Slurry temperature shall not be less than 40°F when tested.

803.02.4 Polymer Slurry: Use polymer slurry, either natural or synthetic, in conformance with manufacturer recommendations and the Drilled Shaft Installation Plan. Slurry temperature shall not be less than 40°F when tested. Conform to Table 803-2.

Table 803-2
Polymer Slurry Requirements

Property	Test	Requirement
Density (pcf)	Mud Weight (Density) API 13B-1, Section 1 [1]	64.0 pcf; max [2]
Viscosity (seconds/quart)	Marsh Funnel and Cup API 13b-1, Section 2.2	32.0 to 135.0
pH	Glass Electrode, pH Meter, or pH Paper	8.0 to 11.5
Sand Content (percent) immediately prior to placing concrete	API 13B-1, Section 5	1.0 max

[1] American Petroleum Institute (API).
[2] When approved by the engineer, polymer slurry may be used in salt water, and the allowable densities may be increased by up to 2 pcf. Slurry temperature shall not be less than 40°F when tested.

803.02.5 Water Slurry: Water may be used as slurry when using casing for the entire length of the drilled hole, provided that the method of drilled shaft installation maintains stability at the bottom of the shaft excavation. Conform to Table 803-3**.**

Table 803-3
Water Slurry Requirements

Property	Test	Requirement
Density (pcf)	Mud Weight (Density) API 13B-1, Section 1[1]	64.0 pcf max
Sand Content (percent) immediately prior to placing concrete	API 13B-1, Section 5	1.0 max

[1] American Petroleum Institute (API)

803.02.6 Access Tubes for Crosshole Sonic Testing: Access tubes for Crosshole Sonic Log (CSL) testing shall be steel pipe of 0.145-inch minimum wall thickness and 1.5-inches minimum inside diameter. The access tubes shall have a round, regular inside diameter free of defects and obstructions, including all pipe joints, in order to permit the free, unobstructed passage of 1.3-inch maximum diameter source and receiver probes used for the crosshole sonic log tests. The access tubes shall be watertight, free from

corrosion, with clean internal and external faces to ensure passage of the probes and good bond between the concrete and the access tubes. The access tubes shall be fitted with watertight threaded or welded end caps on the bottom and threaded end caps on the top.

Access tubes that may be used for remediation purposes shall be adequately sized to accommodate grout pressures required for base grouting methods.

803.02.7 Grout: Grout for filling CSL access tubes and voids created after loading the bi-directional load cells shall be a non-shrink neat cement grout with a minimum water/cement ratio of 0.45 and strength no less than that of the shaft concrete and be in accordance with Section 1018.04.

803.03 SUBMITTALS. Conform to Section 801. Provide submittals as required by the Contract.

Do not begin work until the Project Reference, Drilled Shaft Installation Plan, and the Experience and Personnel submittal acceptance.

803.03.1 Project Reference: At least four weeks prior to the start of drilled shaft construction, submit four copies of a project reference list to the engineer for acceptance, verifying the successful completion by the drilled shaft contractor of at least three separate foundation projects within the last five years with drilled shafts of similar size (diameter and depth) and difficulty to those shown on the plans, and with similar subsurface geotechnical conditions. Include a brief description of each project, the owner's contact person's name, and current phone number for each project listed.

803.03.2 Drilled Shaft Installation Plan: At least four weeks prior to the start of drilled shaft construction, submit to the engineer four copies of the Drilled Shaft Installation Plan. Reference the available subsurface geotechnical data provided in the contract boring logs and any geotechnical reports prepared for this project. Provide at a minimum the following information:

1. Description of overall construction operation sequence and the sequence of drilled shaft construction when in groups or lines.

2. A list, description, and capacities of proposed equipment, including but not limited to cranes, drills, augers, bailing buckets, final cleaning equipment and drilling unit. As appropriate, describe why the equipment was selected, and describe equipment suitability to the anticipated site and subsurface conditions. Include a project history of the drilling equipment

demonstrating its successful use on shafts of equal or greater size in similar subsurface geotechnical conditions.

3. Details of drilled shaft excavation methods, including proposed drilling methods, methods for cleanout of the bottom of the excavation hole, and a disposal plan for excavated material and drilling slurry (if applicable). If appropriate, include a review of method suitability to the anticipated site and subsurface geotechnical conditions including obstruction removal techniques, if such are indicated in the contract subsurface geotechnical information or contract documents.

4. Details of the method to be used to ensure drilled shaft excavation stability (i.e., prevention of caving, bottom heave, etc. using permanent casing, temporary casing, rotating or oscillating method, slurry, or other means) during excavation and concrete placement. Include a review of method suitability to the anticipated site and subsurface geotechnical conditions.

5. Detailed procedures for mixing, using, maintaining, and disposing of the slurry. Provide a detailed mix design, including all additives and their specific purpose in the slurry mix, and a discussion of its suitability to the anticipated subsurface geotechnical conditions.

6. Detailed plan for quality control of selected slurry, including tests to be performed, test methods to be used, and minimum and/or maximum property requirements, which must be met to ensure that the slurry functions as intended, considering the subsurface conditions and shaft construction methods, in accordance with the slurry manufacturer's recommendations. As a minimum, include the tests shown in Table 803-4.

Table 803-4
Minimum Slurry Test Requirements

Property	Test Method
Density	Mud Weight (Density) API 13B-1, Section 1
Viscosity (sec/qt)(sec/L)	Marsh Funnel and Cup API 13B-1, Section 2.2
pH	Glass Electrode, pH Meter, or pH Paper
Sand Content	API 13B-1, Section 5

7. When using polymer slurry, slurry technical assistance information consisting of the name and current phone number of the slurry manufacturer's technical representative assigned to the project, the names of personnel assigned to the project and trained by the slurry manufacturer's technical representative in the proper use of the slurry, and a signed training

certification letter from the slurry manufacturer for each individual, including the date of the training.

8. Reinforcing steel assembly and placement drawings, including type and location of all splices, reinforcement cage support/centralization methods, type and location of all spacers, CSL access tubes and other instrumentation, and procedures for lifting and setting the reinforcement cage.

9. When proposing or requiring casings, casing dimensions, detailed procedures for permanent casing installation, temporary casing installation and removal, and methods of advancing the casing along with the means to be utilized for excavating the drilled shaft hole.

10. When using temporary casing, details of the method to extract the temporary casing, maintaining shaft reinforcement in proper alignment and location, and maintaining the concrete slump to keep concrete workable during casing extraction.

11. Details of concrete placement, including proposed equipment and procedures for delivering concrete to drilled shaft, placement of concrete into shaft including initial placement and raising of tremie or pump line during placement, size of tremie and pump lines, and operational procedures for pumping.

12. The method to be used to form a horizontal construction joint during concrete placement.

13. When applicable, a description of the material to be used to temporarily backfill a drilled shaft excavation hole during a stoppage of the excavation operation, as well as the method used to place and remove the material.

14. Details of procedures to prevent loss of slurry or concrete into waterways, sewers, and other areas to be protected.

15. Details of proposed excavation and concrete placement contingency plans, including a list of equipment or materials required.

16. Describe the method and materials that will be used to fill or eliminate all voids below the top of shaft between the plan shaft diameter and excavated shaft diameter, or between the shaft casing and surrounding soil, if permanent casing is specified.

17. Details of any required load tests including equipment, instrumentation, procedures, calibration data for test equipment, calculations, drawings, and identifying engineering consultants necessary to perform the work.

18. Details and procedures for protecting existing structures, utilities, roadways, and other facilities during drilled shaft installation.

19. Other information required by the plans or specified herein.

The engineer will accept or reject the Drilled Shaft Installation Plan submittal within 10 working days after receipt.

Propose any significant updates or modifications to the Drilled Shaft Installation Plan to the engineer and if accepted, modify the plan. The engineer will accept or reject the modified Drilled Shaft Installation Plan submittal within 10 working days after receipt.

803.03.3 Experience and Personnel: The engineer will accept or reject the Experience and Personnel submittal within 10 working days after receipt. Work shall not be started on any drilled shaft until the contractor's experience and field personnel are accepted by the engineer. The engineer may suspend drilled shaft construction if the contractor substitutes field personnel without prior acceptance by the engineer. The contractor shall be fully liable for the additional costs resulting from the suspension of work, and no adjustments in contract time resulting from such suspension of work will be allowed.

803.03.3.1 Supervisors and Drilling Operators: At least two weeks prior to the start of drilled shaft construction, submit to the engineer for acceptance four copies of a list identifying the on-site supervisors and drill rig operators assigned to the project. The list shall contain a detailed summary of each individual's experience in drilled shaft excavation operations, as well as placement of assembled reinforcing cages and concrete in drilled shafts.

On-site supervisors shall have a minimum of two years of experience in supervising construction of drilled shafts for foundations of similar size (diameter and depth) and difficulty as those shown on the plans, and similar geotechnical conditions to those described in the geotechnical borings. The work experience shall consist of direct supervisory responsibility for the on-site drilled shaft construction operations. Project management level positions indirectly supervising on-site drilled shaft construction operations are not acceptable for this experience requirement.

Drill rig operators shall have a minimum of one year experience in construction of drilled shafts.

803.03.3.2 Testing Consultant: Use an experienced independent test organization that has been accepted by the engineer prior to testing. Perform all CSL testing and analyses under the supervision of a registered professional engineer in Louisiana. A minimum of three years of experience in field testing and analyses of CSL test results is required for the consultant.

803.03.4 Shaft Construction Logs: Prepare the following logs documenting each shaft construction activity as follows: Subsurface

Investigation, Casing, Shaft Excavation, Slurry, and Concrete Placement. The logs shall fully document the work performed with reference to the date, time, and casing/excavation elevation. Each log shall be signed by an authorized representative of the contractor and the Department's inspector, and submitted to the engineer within 24 hours of completion of the corresponding activity.

Use standard log forms provided by the Department unless otherwise allowed by the engineer.

803.03.4.1 Subsurface Investigation Log: Include the associated boring log(s) and cone penetrometer test(s) (CPT) nearest the shaft. These logs may be taken from the plans or performed by the contractor.

803.03.4.2 Casing Log: Include at least the following information for temporary or permanent casing:

- Shaft identification number and location;
- Diameter and wall thickness of the casing;
- Dimensions of casing reinforcement;
- Top and bottom elevations of the casing;
- Method and equipment used for casing installation; and
- Any problems encountered during casing installation.

803.03.4.3 Shaft Excavation Log: Include at least the following information:

- Shaft identification number;
- Location and surface elevation of the shaft;
- Description and approximate top and bottom elevation of each soil or rock material encountered;
- Seepage or groundwater conditions;
- Type and dimensions of tools and equipment used, and any changes to the tools and equipment;
- Any problems encountered;
- Elevation of any changes in the shaft diameter;
- Method used for bottom cleaning and shaft bottom inspection; and
- Final bottom elevation of the shaft.

803.03.4.4 Slurry Log: Include at least the following information:

- Shaft identification number;
- Location;
- Type of slurry used;
- Slurry test results; and
- Any problems encountered.

803.03.4.5 Concrete Placement Log: Include at least the following information:

- Concrete mix used;
- Time of start and end of concrete placement;
- Volume and start/end time for each truck load placed;
- Concrete test results;
- Concrete surface elevation and corresponding tremie tip elevation periodically during concrete placement; and
- Concrete yield plot (volume versus concrete elevation, actual and theoretical).

803.03.5 Testing Reports:

803.03.5.1 Integrity Test Report: Provide as one document both the CSL and the Non-destructive Testing (NDT) results, along with all Shaft Construction Logs for the tested shaft. Testing results shall be in accordance with 803.05.11.

803.03.5.2 Load Test Report: Provide as one document the Load Test results, Integrity Test Report(s), and Shaft Construction Logs for the tested shaft. Testing results shall be in accordance with 803.05.12.

803.04 DRILLED SHAFT PRECONSTRUCTION CONFERENCE. At least seven calendar days prior to beginning shaft construction, hold a drilled shaft preconstruction conference to discuss the accepted Drilled Shaft Installation Plan. If using polymer slurry, the frequency of scheduled site visits by the slurry manufacturer's representative will be discussed.

Those attending shall include personnel identified in the Experience and Personnel submittal and the slurry manufacturer's technical representative.

If key personnel change, or if significant revision of the accepted Drilled Shaft Installation Plan is proposed, an additional conference may be required before remaining shaft construction operations are performed.

803.05 CONSTRUCTION REQUIREMENTS.

803.05.1 Drilled Shaft Excavation: Drilling equipment shall have adequate capacity, including power, torque, and down thrust, to excavate the maximum plan diameter to a depth of 20-foot or 20 percent beyond the maximum plan shaft depth, whichever is greater. Excavate to the required depth shown on the plans or as directed by the engineer. Conduct excavation in a continuous operation until completing shaft excavation, except for pauses and stops as noted, using accepted equipment capable of excavating through

the type of material expected. Provide temporary casing at the site in sufficient quantities to meet the needs of the anticipated construction method.

Interruptions for casing splicing and removal of obstructions will be considered as pauses and will be allowed. Other interruptions will be considered stops. In all instances, protect the excavation against sidewall instability.

If using slurry to protect shaft excavation, maintain the minimum level of slurry throughout interruptions in shaft excavation operations. Recondition the slurry to the required properties prior to recommencing shaft excavation operations.

Sidewall over-reaming is required when the time for shaft excavation exceeds 36 hours. Shaft excavation time is measured from the beginning of excavation, or excavation below the casing when casing is used, to the start of concrete placement.

Sidewall over-reaming is required when the engineer determines the excavation has softened due to the excavation methods, swelled due to delays in the start of concrete placement, or degraded because of slurry cake buildup.

Sidewall over-reaming and extending the excavation is required if slurry is in contact with the bottom 5 feet of the excavation for more than 12 hours. Extend the excavation until undisturbed material is reached.

Over-reaming diameter shall be a minimum of 1 inch and a maximum of 6 inches greater than plan diameter. Over-reaming may be accomplished with a grooving tool, over-reaming bucket, or other equipment accepted by the engineer.

The contractor shall bear all costs associated with sidewall over- reaming, over-drilling, and related additional drilled shaft concrete. Construct drilled shafts after placement of embankment fill unless otherwise shown on the plans. Drilled shafts installed prior to completion of embankment fill shall not be capped until the fill has been placed to the bottom of cap elevation.

803.05.2 Drilled Shaft Excavation Protection Methods: Protect excavation from wall caving and bottom heave. Prevent soil adjacent to the drilled shaft from being disturbed throughout the full length of the shaft. Disturbed soil is defined as soil which its geotechnical properties have been changed from those of the original in-situ soil.

Demonstrate to the satisfaction of the engineer that stable conditions are being maintained. If the engineer determines that stable conditions are not being maintained, immediately take action to stabilize the shaft. Submit a revised Drilled Shaft Installation Plan which addresses the problem and prevents future instability. Do not continue with drilled shaft construction

until the damage which has already occurred has been repaired and the engineer's acceptance of the revised Drilled Shaft Installation Plan has been received.

Protect excavation with one or more of the following methods.

803.05.2.1 Temporary Casing: If casing is adequately sealed into competent soils such that water cannot enter the excavation, excavation may proceed in soils below the water table provided the water level within the casing does not rise or exhibit flow. As the temporary casing is withdrawn, a sufficient head of fluid concrete must be maintained to ensure that water or slurry outside the temporary casing will not breach the column of freshly placed concrete.

Casing extraction shall be at a slow, uniform rate with the pull in line with the shaft axis. Movement of casing shall not deform reinforcing steel cage. The reinforcing steel cage shall meet the tolerances as specified in 803.05.10.

Remove all temporary casing from the excavation as completing concrete placement, unless permission has been received from the engineer to leave specified temporary casing in place.

Drilled shaft casing installed by rotating or oscillating methods shall be equipped with cutting teeth or a cutting shoe. Use of rotating or oscillating casing methods shall be in accordance with the equipment and procedures shown in the accepted Drilled Shaft Installation Plan.

803.05.2.2 Permanent Casing: Drive casing to the specified tip elevation and excavate. Vibratory hammer is not allowed. If tip elevation cannot be reached, excavate and advance casing until reaching the specified tip elevation. After the casing has been filled with concrete, fill all void space between the casing and drilled shaft excavation with a granular material meeting the requirements of 1003.09.

Remove upper portion of permanent casing to the top elevation of the drilled shaft or as specified. For drilled shafts constructed within a permanent body of water, remove upper portion of permanent casing to the low water elevation, unless otherwise specified.

803.05.2.3 Slurry: Maintain stability during drilled shaft excavation and concrete placement operations. Maintain equalized water pressure on the sides and base of the drilled shaft excavation when encountering or anticipating groundwater based on the available subsurface data. If water exists in amounts greater than 3-inches in depth or enters at a rate of more than 12-inches per hour then the drilled shaft excavation must be filled with slurry to at least the level specified in 803.05.2.3.2 and concrete placed by tremie.

803.05.2.3.1 Slurry Technical Assistance: The manufacturer's representative shall provide technical assistance and be present at the site prior to polymer slurry use. The manufacturer's representative shall remain at the site during the construction and completion of a minimum of one drilled shaft to adjust the slurry mix to the specific site conditions.

After the manufacturer's representative is no longer present at the site, the contractor's employee trained in the use of the slurry shall be present at the site throughout the remainder of shaft slurry operations for this project to perform the duties specified above.

803.05.2.3.2 Minimum Level of Slurry in the Excavation: Maintain slurry level in the excavation to obtain hydrostatic equilibrium at a height required to provide and maintain a stable hole, but no less than 5 feet above the water table or surface of surrounding water body.

Maintain slurry level sufficiently above all unstable zones to prevent bottom heave, caving or sloughing of those zones. Provide casing or other means as necessary to meet these requirements.

803.05.2.3.3 Cleaning Slurry: Clean, re-circulate, de-sand, or replace the slurry, as needed, in order to maintain the required slurry properties. Sand content will only be required to be within specified limits immediately prior to concrete placement. Slurry properties outside the specified ranges may result in risks such as unstable holes or lost tools.

803.05.2.3.4 Slurry Sampling, Testing, and Logging: Mineral slurry and polymer slurry shall be mixed and thoroughly hydrated in slurry tanks, lined ponds, or storage areas. Draw sample sets from the slurry storage facility and test the samples for conformance with the appropriate specified material properties before beginning slurry placement in the drilled hole. A sample set shall be composed of samples taken at mid-height and within two feet of the bottom of the storage area.

Sample and test all slurry in the presence of the engineer. The date, time, names of the persons sampling and testing the slurry, and the results of the tests shall be recorded. Submit a copy of the slurry log to the engineer at the completion of each drilled shaft or when requested during the drilling operation.

Take sample sets of all slurry, composed of samples taken at mid-height and within two feet of the bottom of the drilled shaft, and test during drilling as necessary to verify control of slurry properties. As a minimum, take sample sets of slurry and test at least once every four hours after beginning use during each shaft construction.

Take and test sample sets of all slurry immediately prior to placing concrete.

803.05.3 Obstructions: When obstructions are encountered, notify the engineer promptly. An obstruction is defined as a specific object encountered during the drilled shaft excavation operation which prevents or hinders the advance of the drilled shaft excavation. Obstructions include, but are not limited to: logs, man-made objects, and rocks. When efforts to excavate the obstruction result in a significant reduction in the rate of advance, remove or break up the obstruction. If blasting is required, submit a Blasting Plan to the Chief Construction Engineer for review and acceptance. Equipment lost in the excavation will not be considered an obstruction as defined above and shall be promptly removed. Equipment removal and repair of excavation will be at no additional cost or time to the Department.

803.05.4 Protection of Existing Structures: Control operations to prevent damage to existing structures, utilities, roadways, and other facilities. Preventive measures may include selecting construction methods and procedures that will prevent excessive caving of the drilled shaft excavation, monitoring and controlling vibrations from driving of casing, sheeting, or drilling of the shaft.

803.05.5 Drilled Shaft Excavation Inspection: Use appropriate means, such as a cleanout bucket, air lift, or hydraulic pump to clean the bottom of the excavation of all drilled shafts. Limit sediment at excavation base to a maximum of 1.5 inches, with a minimum of 50 percent of the shaft base less than 0.5 inch of sediment just prior to concrete placement.

The drilled shaft excavation will be inspected for acceptance by the engineer prior to proceeding with construction. The bottom of the excavated drilled shaft shall be sounded with an airlift pipe, a tape with a heavy weight attached to the end of the tape, a borehole camera with visual sediment depth measurement gauge, or other means acceptable to the engineer to determine that the drilled shaft bottom meets contract requirements.

803.05.6 Assembly and Placement of Reinforcing Steel: Prior to and during fabrication of the steel reinforcing cage, support reinforcing bars off the ground surface and protect from contamination of mud and other deleterious materials. Rigidly brace reinforcing cage to retain its configuration during handling and construction. Individual or loose bars will not be permitted. All intersections of vertical and horizontal bars must be tied. Show bracing and any extra reinforcing steel required for fabrication of the cage on details submitted with the Drilled Shaft Installation Plan.

Carefully position reinforcement; securely fasten to provide minimum clearances and ensure that no displacement of the reinforcing steel cage occurs during placement of the concrete. The reinforcing steel cage shall meet the tolerances as specified in 803.05.10.

Splicing of the reinforcement cage during placement in the shaft excavation will not be permitted unless shown on the plans or allowed by the engineer. If the reinforcing cage is spliced during placement into the drilled shaft excavation, the splice details and location of the splices shall be in accordance with the plans and the Drilled Shaft Installation Plan.

Securely hold steel reinforcing cage in position throughout the concrete placement operation. Tie and support the reinforcing steel in the drilled shaft so that the location of the reinforcing steel will remain within allowable tolerance. Use concrete spacers or other acceptable non-corrosive spacing devices at sufficient intervals [near the bottom, the top, and at intervals not exceeding 10 feet vertically] to ensure concentric spacing for the entire cage length. The number of spacers required at each level will be one spacer for each foot of excavation diameter, with a minimum of four spacers at each level. The spacers shall be of adequate dimension to ensure an annular space between the outside of the reinforcing cage and the side of the excavation along the entire length of the drilled shaft as shown on the plans. The width of the spacer shall be a minimum of 1.75 inches. Acceptable feet (bottom supports) made of plastic or concrete shall be provided to ensure that the bottom of the cage is maintained at the proper distance above the base of the excavation unless the cage is suspended from a fixed base during concrete placement.

Bracing steel which constricts the interior of the reinforcing cage must be removed after lifting the cage if free fall concrete or tremie methods of concrete placement are to be used.

803.05.7 Assembly and Placement of Access Tubes: Install access tubes meeting the requirements of 803.02.6 for the full depth of all shafts to permit access of CSL testing equipment, except as otherwise noted

herein. If, in the opinion of the engineer, the condition of the drilled shaft excavation permits drilled shaft construction in the dry, the engineer may specify that CSL testing be omitted.

Clear access tubes of all debris before installing. Repair or replace damaged access tubes prior to concrete placement.

The minimum number of access tubes installed shall be as specified in Table 803-5.

Table 803-5
Drilled Shaft Access Tubes for CSL Testing

Shaft Diameter, D (Feet)	Minimum Number of Access Tubes
D ≤ 3.5	3
3.5 < D ≤ 4.5	4
4.5 < D ≤ 5.5	5
5.5 < D ≤ 6.5	6
6.5 < D ≤ 7.5	7
7.5 < D ≤ 8.5	8
8.5 < D ≤ 9.0	9
9.0 < D ≤ 10.0	10
10.0 < D ≤ 11.0	11
11.0 < D ≤ 12.0	12

Fit the tubes with a watertight threaded or welded end cap on the bottom and a removable threaded cap on the top. Use watertight threaded or welded splices. Place the access tubes around the drilled shaft, inside the spiral or hoop reinforcement, and 3-inches clear of the vertical reinforcement, at a uniform spacing measured along the circle passing through the centers of the access tubes. If these minimums cannot be met due to close spacing of the vertical reinforcement, then bundle the access tubes with the vertical reinforcement.

The engineer may allow the tubes to be installed on the outside of the cage if the access tubes have a minimum concrete cover of 3 inches and bumpers are installed on the outside of the cage to prevent tubes from being crushed. Install the tubes in a symmetric pattern with tubes equally spaced around the perimeter of the cage and parallel to the plan axis of the shaft. Fasten the tubes to the reinforcement cage at a maximum of 5-foot intervals or as directed by the engineer. Threaded U-bolts may be used to attach tubes to the rebar cage. Extend the tubes to the shaft bottom and at least 3-foot above the shaft top. If the shaft top is subsurface, extend the tubes at least 3-foot above the ground and water surfaces. Do not damage the tubes during reinforcement

installation operations. Avoid pulling or displacing the cage after concrete has begun to set. Within two hours of concrete placement, fill the access tubes with clean water and cap or seal the tube tops to keep out debris. Water shall remain in the access tubes at all times until all CSL testing for that shaft is complete. Remove caps or plugs from tubes after concrete placement so as not to apply excess torque, hammering, or other stresses which could break the bond between the access tubes and the concrete. The contractor shall be responsible for all delays arising from data quality issues due to improper installation or treatment of the CSL access tubes.

803.05.8 Concrete Placement, Curing, and Protection: Commence concrete placement as soon as possible after completion of drilled shaft excavation and inspection by the engineer. Immediately prior to commencing concrete placement, the drilled shaft excavation and the properties of the slurry (if used) shall conform to 803.02. Continue concrete placement in one operation to the top of the drilled shaft.

Unless approved otherwise by the engineer, the elapsed time from beginning to completion of concrete placement in the drilled shaft shall not exceed two hours for drilled shafts 5-foot in diameter or less. The minimum concrete placement rate for drilled shafts larger than 5-foot in diameter shall be 30 cubic yards per hour.

The engineer may allow an extension of the concrete placement time if the contractor adequately demonstrates by trial mix and slump loss tests that the slump of the concrete will be 4 inches or greater during the entire time of concrete placement during the longer placement time.

If water is not present (a dry shaft), the concrete shall be deposited through the center of the reinforcement cage by a method which prevents segregation of aggregates. If concrete is placed by free fall method, minimum clear opening shall be 24 inches in diameter and use a centering device such that the free-fall is vertical down the center of the drilled shaft without hitting the sides, the steel reinforcing bars, or the steel reinforcing bar cage bracing. Reduce the rate of concrete placement or reduce the height of free fall as directed by the engineer if the concrete strikes the reinforcing cage or sidewall.

The elapsed time for concrete placement shall not exceed the time limit defined in the accepted Drilled Shaft Installation Plan and demonstrated by a successful technique shaft or test shaft. The concrete placement time shall commence at the mixing of the concrete and extend through the completion of placement of the concrete in the drilled shaft excavation, including removal of any temporary casing. For wet placement methods, the placement time shall

start at the batching of the initial load of concrete to be placed in the shaft. Prior to concrete placement, provide test results of both a trial mix and a slump loss test conducted by an accepted testing laboratory using accepted methods to demonstrate that the concrete meets this defined placement time limit. The concrete mix shall exhibit slump values and limitations conforming to 803.02.1. The trial mix and slump loss tests shall be conducted at ambient temperatures appropriate for site conditions. Ambient temperature at the time of concrete placement will not be greater than the ambient temperature at the time of the concrete trial mix and slump loss test.

Admixtures such as midrange water reducers, plasticizers, and retarders may be used and shall conform to 1011.02 and be included in the concrete mix design and detailed in the Drilled Shaft Installation Plan. After accepting for use, adjust all admixtures for the conditions encountered on the job so the concrete remains in a workable plastic state throughout the defined placement time limit.

Throughout concrete placement operations, the discharge end of the tremie shall remain submerged in the concrete at least 5 foot and the tremie shall always contain enough concrete to prevent water from entering. The concrete placement shall be continuous until work completion, resulting in a seamless, uniform shaft. If the concrete placement operation is interrupted, the engineer may require core drilling or other tests to verify that the drilled shaft contains no voids or horizontal joints. If testing reveals voids or joints, repair them or replace the drilled shaft at no expense to the Department.

Before placing fresh concrete against concrete deposited in water or slurry (construction joint), remove all scum, laitance, loose gravel, and sediment on the surface of the previously placed concrete.

Complete a concrete yield plot for each wet shaft poured by tremie methods. Submit this yield plot to the engineer in accordance with 803.03.4. Casing installations or drilled shaft excavations are not to be performed within a clear distance of three diameters of a newly poured shaft within 24 hours of concrete placement and only after the concrete has reached a minimum compressive strength of 1800 psi.

803.05.9 Tremies: A gravity tremie shall have a hopper at the top that empties into a watertight tube at least 10 inches in diameter. If using a concrete pump in lieu of the tremie, use a watertight rigid pump line with a minimum diameter of 5 inches and all requirements specified herein apply.

Mark tremie clearly at one foot increments. The discharge end of the tremie tube shall include a device to seal out water while the tube is first filled with concrete. In lieu of a seal at the discharge end of the pipe, a “plug” or

"pig" may be placed in the hopper prior to concrete placement which moves through the tremie when pushed by the concrete, forcing water or slurry from the tremie pipe. A plug or pig is a flexible device which fills the entire cross section of the tremie tube and creates an impermeable separation between the concrete in the tremie and the slurry. When placing a plug or pig at the top of the tremie it shall be inserted after the tremie is placed in the wet excavation and before charging the tremie with concrete. The bottom of the tremie shall be placed slightly off the bottom of the excavation to allow the plug or pig to pass out of the tremie.

The hopper and tubes shall not contain aluminum parts that will have contact with the concrete. The inside and outside surfaces of the tubes shall be clean and smooth to allow both flow of concrete and the unimpeded withdrawal of the tube during concrete placement.

803.05.10 Drilled Shaft Construction Tolerances: Construct shaft excavations so that the top center of the poured shaft with respect to the plan location is within the horizontal tolerances shown in Table 803-6.

Table 803-6
Horizontal Tolerances

Shaft Diameter, D (Feet)	Tolerance (Inches)
Multi Shaft Foundations	—
D ≤ 2	3
2 < D < 5	4
D ≥ 5	6
Single Shaft Column	—
All shaft diameters	3

Drilled shafts in soil shall be within 1.5 percent of plumb. Plumbness will be measured from the top of poured shaft elevation or mudline, whichever is lower.

During excavation of the shaft, make frequent checks on the plumbness, alignment, and dimensions of the shaft. Correct any deviation exceeding the allowable tolerances with a procedure accepted by the engineer.

Check elevation of the top of the steel cage before and after placing concrete. If the upward displacement of the reinforcing cage exceeds 2 inches, or if the downward displacement exceeds 6 inches, the drilled shaft will be considered defective. Make corrections to the satisfaction of the engineer. No additional drilled shafts shall be constructed until the contractor

has modified the reinforcing cage support in a manner satisfactory to the engineer.

When the shaft reinforcing cage for a single column is to be tied directly to the column steel, the reinforcing cage shall be concentric with the drilled shaft excavation within a horizontal tolerance of 0.5 inch. On all other shafts, the reinforcing cage shall be concentric with the drilled shaft excavation within a horizontal tolerance of 1.5 inches.

The top elevation of the completed drilled shaft shall have a tolerance of plus or minus 2 inches.

Tolerances for casings shall be in accordance with American Pipe Institute tolerances applicable to regular steel pipe.

Drilled shaft excavations and completed shafts not constructed within the required tolerances will be considered defective. Correct all defective shafts to the satisfaction of the engineer. Materials and work necessary, including engineering analysis and redesign, to complete corrections for out-of-tolerance shafts shall be furnished without either cost or time to the Department. Redesign drawings and computations shall be sealed and signed by a registered Professional Engineer licensed in Louisiana.

803.05.11 Integrity Testing:

803.05.11.1 Crosshole Sonic Log Testing: Use Crosshole Sonic Log (CSL) testing to aid in identifying anomalies in shaft concrete by measuring ultrasonic pulse travel time from a signal source in one access tube to a receiver in another access tube. CSL testing will be used to determine integrity acceptance of the shaft.

803.05.11.1.1 Testing Schedule: Perform testing after shaft concrete has cured at least 48 hours. Additional curing time prior to testing may be required if the shaft concrete contains admixtures, such as set retarding admixture or water reducing admixture. The additional curing time prior to testing required under these circumstances shall not be grounds for additional compensation or extension of contract time. No subsequent construction shall be performed on the completed shaft until shaft acceptance by the engineer.

Complete CSL tests for technique shafts and test shafts within five calendar days of concrete placement.

Complete CSL tests for production shafts within 20 calendar days of concrete placement.

During the development of the CSL testing schedule, consider the CSL testing time constraints and the shaft production schedule.

803.05.11.1.2 Testing Equipment: The CSL test equipment shall be capable of performing the following functions and conform to ASTM D6760:

- Displaying individual CSL records, recording CSL data, and analyzing receiver responses.
- Printing of CSL logs.
- Testing in 1.5 inch minimum I.D. access tubes.
- Generating an ultrasonic voltage pulse to excite the source with a synchronized triggering system to start the recording system.
- Measuring and recording the depths of CSL probes at the time signals are recorded.
- Filtering/amplifying signals.

803.05.11.1.3 Testing Procedures: Use the submitted and accepted testing consultant to perform CSL testing. Provide testing consultant with the shaft construction logs. Use CSL testing on all production shafts, technique shafts, and test shafts when any of the following conditions occur: placing shaft concrete through slurry; using full-length casing; or, as required by the engineer.

Prior to performing CSL testing operations, remove concrete at the top of the drilled shaft down to sound concrete.

Inspect access tubes after placing shaft concrete and before beginning the CSL testing. Each access tube that the test probe cannot pass through shall be replaced at no additional cost to the Department with a 2-inch diameter hole cored through the concrete for the entire length of the shaft. Unless directed otherwise by the engineer, cored holes shall be located approximately 6-inches inside the drilled shaft reinforcement and shall not damage the reinforcement. Descriptions of inclusions and voids in cored holes shall be logged and a copy of the log shall be submitted to the engineer. Findings from cored holes shall be preserved, identified as to location, and made available for inspection by the engineer.

As a minimum, test all perimeter tube pairs and major diagonal tube pairs. If a possible defect is found, conduct CSL testing between additional pairs of tubes as determined by the testing consultant. No welding shall take place in the general vicinity during CSL testing operations.

Perform CSL tests with the source and receiver probes in the same horizontal plane unless test results indicate potential defects in which case the questionable zone may be further evaluated with angled tests consisting of the source and receiver vertically offset in the access tubes. Make CSL

measurements at 2-inch depth intervals. Starting from the bottom of the tubes, pull the probes simultaneously over a depth measuring device.

803.05.11.2 Non-destructive Testing: Non-destructive testing, other than CSL, shall be performed in accordance with the plans and specifications.

803.05.11.3 Reporting Results: Submit Integrity Test results to the engineer for preliminary review and comment within seven calendar days after the Integrity Test.

The final Integrity Test results shall be sealed, signed, and dated by a Professional Engineer licensed in Louisiana prior to inclusion in the Integrity Test Report. Submit the final Integrity Test Report in accordance with 803.03.5 to the engineer within 21 calendar days after completion of Integrity Test.

803.05.11.3.1 CSL Test Results: Test results shall contain at least the following:

- Project name and number;
- Shaft identification number and location;
- Date of testing;
- Description of shaft installation and/or construction methods;
- Description of the shaft details, dimensions, elevations, areas, materials, shaft age at time of CSL testing (days from concrete placement to CSL testing), etc;
- CSL logs for each tube pair tested with analyses of the initial pulse arrival time versus depth and pulse energy/amplitude versus depth;
- Waterfall diagrams;
- All measurements used to compute the sensor elevations in the tubes relative to the shaft;
- CSL tube numbers tested, test length, average compression velocity, and a description of anomalies detected. Include with each CSL anomaly description the CSL tube number, depth below top of concrete, percent concrete wave speed reduction, and recommended concrete condition rating;
- CSL logs for each tube pair tested with any defect zones indicated on the logs and discuss in the test report as appropriate;
- Discussion of test results and recommendations. Include shaft construction log information, as it affects test results and recommendations;
- Results and output of any analyses inherent to the test method;
- Electronic data files if applicable; and,

- All additional pertinent information.

803.05.11.3.2 Non-Destructive Test Results: Test results shall contain at least the following:

- Project name and number;
- Shaft identification number and location;
- Date of testing;
- Description of shaft installation and/or construction methods;
- Description of the shaft details, dimensions, elevations, areas, materials, etc;
- Instrumentation, test procedures, and data collection;
- Discussion of test results and recommendations. Include shaft construction log information as it affects test results and recommendations;
- Results and output of any analyses inherent to the test method;
- Electronic data files if applicable; and,
- All additional pertinent information.

803.05.12 Load Test: Install test shafts to the same dimensions, details, and elevations shown on the plans; install using the same equipment and installation procedures proposed for installation of the production drilled shafts.

If the equipment or procedures change following the completion of load testing, install additional test shafts and conduct additional load tests as directed by the engineer at no additional cost to the Department.

All load testing shall be completed and the results evaluated by the engineer before installing any production drilled shafts.

803.05.12.1 Test Shaft: Test shafts are shafts constructed in advance of permanent shafts for purposes of determining shaft length by load testing. Test shafts shall be long enough to be drilled, if necessary, to 15 foot below the plan tip elevation of the nearest permanent shaft. Test shaft length shall be long enough to allow for all testing to be performed.

803.05.12.2 Static Load Test: Static load tests shall be performed in accordance with the procedures specified in ASTM D1143, Procedure A: Quick Test, with the following exceptions:

Apply the load in 20 equal increments or as directed. Hold each load increment for a period of five minutes. Load test shaft to failure or until reaching the specified maximum test load shown on the plans. The test shaft will be considered to have failed when continuous jacking is required and continuous shaft movement is measured. Unless otherwise directed, maintain load until the gross settlement has reached 5 percent of the maximum shaft

diameter. After the plunging load and failure deformation have been achieved, allow the loading system to equalize until shaft movement and variations in jack pressure have ceased.

Remove load in decrements of approximately 20 percent of the maximum load placed on the test shaft. Record gross settlement and load readings five minutes after reaching each unloading load decrement. Record the final recovery of the unloaded test shaft until movement is essentially complete for a period up to 30 minutes.

803.05.12.2.1 Hydraulic Jack: Calibrate the entire hydraulic system for all stages of loading and unloading through an accepted independent calibration service. Furnish a certified laboratory report of the calibration tests to the engineer. Perform calibration no more than 30 days prior to load test commencement. After the system is calibrated, no replacement parts will be permitted (except the pump) without recalibration of the system.

803.05.12.2.2 Displacement Instrumentation: Furnish instrumentation to monitor the gross displacement readings at the shaft head during load testing. The instrumentation shall consist of three independent dial or electronic readout gauges capable of measuring displacement to a precision of ±0.001 inch, with a minimum travel range of 4 inches or 15 percent of maximum shaft diameter, whichever is greater. Provide smooth bearing surfaces perpendicular to the direction of the gauge stem travel for each gauge.

803.05.12.3 High-Strain Dynamic and Force Pulse (Rapid) Load Tests: High-Strain Dynamic tests shall be performed in accordance with the procedures specified in ASTM D4945. The High-Strain Dynamic load test is imposed by the impact of a falling mass which typically has a weight of 1 to 2 percent of the maximum test load.

Force Pulse (Rapid) tests shall be performed in accordance with the procedures specified in ASTM D7383. Two alternative procedures are provided: Procedure A uses a combustion gas pressure apparatus to produce the required axial compressive force pulse. Procedure B uses a cushioned drop mass apparatus to produce the required axial compressive force pulse. Either procedure will be acceptable.

803.05.12.3.1 Preparation: Notify the engineering consultant of the requirement for a load test at least 30 days in advance of each test. Perform site and shaft preparation without damaging the instrumentation or cables. Cut and/or clean the surface of the shaft down to design or test elevation. The top of the shaft shall be smooth and level.

803.05.12.3.2 Procedure: Perform load testing on cast-in-place shafts no sooner than seven days after completion, or once the shaft has achieved the design concrete compressive strength as determined by cylinder compression tests. Complete load test by applying one or more loading cycles to mobilize shaft ultimate resistance or until a load equal to or in excess of the required nominal resistance is reached.

803.05.12.4 Bi-Directional Load Cell Test: Install load cells and load test instrumentation in accordance with the bi-directional load cell supplier recommendations, instructions, and procedure manuals, as accepted by the engineer.

The bi-directional load cells shall be capable of expanding to not less than 6 inches while maintaining the applied test load.

Coordinate with the load cell supplier to determine and/or verify all required equipment, materials, quantities, procedures, and all other applicable items necessary to complete the load testing shown on the plans.

Furnish an acceptable pressurized gas source, a hydraulic pump, hydraulic lines, calibrated hydraulic gauge, and all other equipment and material necessary for performing the load tests. Furnish fresh potable water from an accepted source to form the hydraulic fluid used to pressurize the bi-directional load cells.

Furnish, install, and monitor vibrating wire strain gauges as shown on the plans. Place the strain gauges in pairs on opposite sides of the reinforcing cage at the elevations shown on the plans.

Attach two Linear Variable Differential Transformer (LVDT) vibrating wire displacement gauges to each load cell to monitor the expansion and contraction of the load cell. In addition, mount two LVDT gauges on an independent reference beam and set on opposite sides of the top of the test shaft to monitor axial shaft displacement.

Set two telltale rods on the top of each load cell to monitor the displacement of the top of the load cell. The telltale shall consist of a 0.375-inch diameter stainless steel rod, greased for reducing friction and corrosion, and placed inside a constant 0.75-inch inside diameter pipe. Individual sections of telltales shall be joint coupled flush so that each rod is of uniform diameter throughout its length.

Furnish a portable computer and electronic logging equipment to simultaneously monitor all instrumentation at time intervals designated by the engineer.

Assemble the load cells, piping, and other attachments and make ready for installation in accordance with the requirements of the bi- directional load cell supplier and the following:

Weld steel top and bottom bearing plates to the load cells. Provide holes through the bearing plates, as appropriate, to facilitate placement of tremie concrete;

Coat the upper surface of the bottom steel bearing plate with grease prior to installation into the shaft, to prevent concrete bonding with the bottom plate;

Attach the load cells and plate assembly to the reinforcement cage. Securely fasten all hydraulic hoses, telltale casing, slip joints, etc. to the reinforcing cage. Prior to installation into the drilled shaft excavation, protect the top of piping to keep dirt, concrete or other deleterious materials from entering the piping; and,

Limit deflection of the cage to a maximum of 2 feet between pick points while lifting the cage from the horizontal position to vertical. Provide additional support, bracing, strong backs, etc. to maintain deflection within the specified limit.

For each load test, place the load in increments of 5 percent of the estimated maximum test load shown on the plans, or until the nominal resistance load, as indicated by the instruments, is approached, or to the maximum capacity of the load cell, whichever occurs first. Unless the maximum capacity of the load cell has been reached, apply increments of 2.5 percent of the estimated maximum test load until the limiting load is attained, or the drilled shaft top displacement reaches 2 inches, or to the maximum extension of the load cell;

When the load cell will be used for a subsequent loading stage, the engineer may interrupt the loading sequence at a load cell opening of approximately 3 inches, or less. Maintain each load increment for a minimum period of five minutes, with complete sets of readings obtained and recorded from all gauges and instruments at one, two, and five minutes after application of the load increment. Apply each increment of load within the minimum length of time practical and take instrument system readings immediately. It is intended that the addition of a load increment and the completion of the instrument system readings shall be completed within 5 to 15 minutes. The engineer may elect to hold the maximum applied load for up to one hour. The load shall be removed in decrements of about 10 percent of the maximum test load. Remove each decrement of load within the minimum length of time practical and take instrument system readings immediately. It is intended that the removal of a load decrement and the completion of the instrument system

readings shall be completed within 5 to 15 minutes. The engineer may also require a reloading cycle of ten loading increments and five unloading decrements. Record final recovery of the drilled shaft for a period up to one hour after the last unload interval.

After completion of the load test to the satisfaction of the engineer, and when authorized in writing by the engineer, flush all hydraulic fluid from the bi-directional load cells and hydraulic lines, and replace with a non-shrink neat grout in accordance with the accepted Drilled Shaft Installation Plan and 803.02.7. Grout all voids remaining outside the load cells after completion of the load test, in accordance with 803.02.7.

803.05.12.5 Reporting Results: Submit load test results to the Engineer for preliminary review and comment within four working days after the load test.

The final load test results shall be sealed, signed, and dated by a Professional Engineer licensed in Louisiana prior to inclusion in the Load Test Report. Submit to the engineer the final Load Test Report within 21 calendar days after completion of load test, in accordance with 803.03.5.

803.05.12.5.1 Static Load Test: Load test results shall contain at least the following:

- Project name and number;
- Test shaft identification number and location;
- Date of testing;
- Description of installation and/or construction methods;
- Description of the test shaft details, dimensions, elevations, areas, weights, etc;
- Instrumentation, test procedures, and data collection;
- Discussion of test results and recommendations;
- Results and output of any analyses inherent to the test method;
- Top of shaft load vs. deflection curve for each test;
- Nominal resistance of shaft;
- Electronic data files, if applicable; and,
- All additional pertinent information.

803.05.12.5.2 High-Strain Dynamic and Force Pulse (Rapid) Load Tests: Load test results shall contain at least the following:

- Project name and number;
- Test shaft identification number and location;
- Date of testing;
- Description of installation and/or construction methods;

- Description of the test shaft details, dimensions, elevations, areas, weights, etc;
- Instrumentation, test procedures, and data collection;
- Discussion of test results and recommendations;
- Results and output of any analyses inherent to the test method;
- Top of shaft load vs. deflection curve for each test;
- Nominal resistance of shaft;
- Electronic data files (PDA.W01 format; others if applicable); and,
- All additional pertinent information.

803.05.12.5.3 Bi-Directional Load Cell Test: Load test results shall contain at least the following:

- Project name and number;
- Test shaft identification number and location;
- Date of testing;
- Description of installation and/or construction methods;
- Description of the test shaft details, dimensions, elevations, areas, weights, etc;
- Instrumentation, test procedures, and data collection;
- Discussion of test results and recommendations;
- Tables presenting all instrumentation data;
- Plots of load versus displacement (up and down) for each load cell level and for each stage of the test;
- Plots of load along the length of the drilled shaft determined from the strain gauge data for at least 20 applied load increments;
- Summary of unit side resistance along the length of the drilled shaft and end bearing resistance;
- Plots of creep displacement for each load increment;
- Plot of equivalent top-of-shaft displacement for the test shaft, developed from the load test data; and,
- All additional pertinent information.

803.05.13 Loading Permanent Shaft: When loading a permanent shaft, conduct the loading in accordance with the procedure given in 803.05.12, except the test load shall be as directed by the engineer.

803.05.14 Technique Shaft: Demonstrate the adequacy of methods, techniques, and equipment by successfully constructing a technique shaft in accordance with the requirements. Position the technique shaft at location shown on the plans, but no less than a clear distance of three drilled shaft diameters from the closest production shaft. Construct the technique shaft to the maximum diameter and maximum depth of any production drilled shaft

shown on the plans. Reinforce the technique shaft with the same reinforcement as the corresponding size production shaft. Complete the technique shaft and obtain acceptance by the engineer prior to initiating installation of the load test shafts and production drilled shafts. Failure to demonstrate to the engineer the adequacy of methods and equipment shall be reason for the engineer to require alterations in equipment and/or method to eliminate unsatisfactory results. Any additional technique shaft requiring demonstration of the adequacy of altered methods or construction equipment will be at no additional cost to the Department. Once acceptance has been given by the engineer to construct production drilled shafts, no changes will be permitted in the methods or equipment used to construct the satisfactory technique shaft without the written acceptance of the engineer, which may require additional technique shafts or load tests.

The technique shaft will be used by the engineer to determine if the contractor can: control dimensions and alignment of excavations within tolerance; install casing and remove temporary casing; seal the casing into impervious materials; control the size of the excavation under caving conditions by the use of a mineral, polymer slurry, or by other means; properly clean the completed drilled shaft excavation; construct drilled shafts in open water areas; handle and install reinforcing cages; satisfactorily place concrete meeting the specifications within the prescribed time limit; and sSatisfactorily execute any other necessary construction operation.

Cut off technique shaft as directed by the engineer, but no less than 2 foot below finished grade and leave in place after receiving written authorization from the engineer. For navigable waterways comply with 107.09. For other waterways, remove shaft to 2 foot below mudline or as directed.

803.05.15 Evaluation and Shaft Acceptance: Drilled shaft construction may continue prior to acceptance of the previous shaft if, in the opinion of the engineer, the contractor is constructing the shafts in accordance with the Drilled Shaft Installation Plan and the construction methods are satisfactory.

The engineer will evaluate the Integrity Test Reports and determine whether the drilled shaft construction method produces acceptable shafts. Allow five working days for the evaluation to be conducted after receipt of an acceptable Integrity Test report. Integrity testing should indicate the presence of irregularities such as poor quality concrete, voids, honeycombs, and soil intrusions. Report all defects indicated by the testing to the engineer and conduct further tests as required to evaluate the extent of such defects. Conduct additional CSL measurements between all tube pair combinations in

any drilled shafts that have velocity reductions greater than 20 percent. Provide CSL data and 3-D tomography analysis of all CSL data in the event velocity reductions greater than 20 percent are detected. Additional nondestructive testing to determine extent of defects or to determine if tube debonding has occurred shall be at no cost to the Department. If the engineer determines that the drilled shaft is acceptable based on favorable testing results, the shaft is acceptable.

After completing integrity testing and the engineer has issues, written acceptance of the shaft, dewater and grout the access tubes. Foundation construction involving the shaft may continue.

803.05.16 Defective Shaft and Remediation: If the engineer determines that the shaft lacks integrity due to unacceptable anomalies in the concrete or failure to carry load, the shaft will be rejected. Suspend production shaft construction until identifying and resolving the problem. Modify the Drilled Shaft Installation Plan as required to document changes.

Rejected shafts will require further investigation, evaluation, remediation, or replacement. Submit the proposed plan of action to the Department for review and acceptance. Re-evaluation of the shaft may consist of, but is not limited to, additional nondestructive testing and/or coring. Corrective actions may consist of, but are not limited to: coring, removing anomalies, and replacing concrete; removing the shaft concrete and extending the shaft deeper; providing straddle shafts or a replacement shaft; and post grouting. When coring is used, the method and equipment shall provide for complete core recovery and shall minimize abrasion and erosion of the core.

All costs and delays associated with re-evaluation and corrective action are the responsibility of the contractor. Submit a plan for further investigation or remedial action for rejected shafts to the engineer for review and acceptance. Support all modifications to dimensions of shafts required by the investigation and remedial action plan by calculations and working drawings. All investigation and remedial action procedures, equipment, and designs shall be prepared by a registered Professional Engineer licensed in Louisiana, and submitted to the engineer for acceptance. Do not begin repair operations until receiving the engineer's written acceptance of the investigation and remedial action plan.

Dewater and fill with grout all access tubes and cored holes after completing tests and accepting the drilled shaft. Fill access tubes and cored holes using grout tubes that extend to the bottom of the tube or hole or into the grout already placed.

803.06 MEASUREMENT.

803.06.1 Drilled Shaft: Measure the drilled shaft from the accepted tip elevation by the linear foot.

803.06.2 Technique Shaft: Measure the technique shaft by the linear foot installed and accepted.

803.06.3 Permanent Casing: Measure the permanent casing by the linear foot installed of each diameter.

803.06.4 Test Shaft: Measure the test shaft by the linear foot installed and accepted.

803.06.5 Static Load Test: Measure the static load test per each test performed and accepted.

803.06.6 High-Strain Dynamic Test: Measure the High-Strain Dynamic test per each test performed and accepted.

803.06.7 Force Pulse (Rapid) Test: Measure the Force Pulse (Rapid) test per each test performed and accepted.

803.06.8 Bi-Directional Load Cell Test: Measure the Bi-Directional Load Cell test per each test performed and accepted.

803.06.9 Crosshole Sonic Log Test: Measure the Crosshole Sonic Log test per each drilled shaft tested and accepted.

803.06.10 Non-Destructive Test: Measure the Non-Destructive test per each drilled shaft tested and accepted.

803.07 PAYMENT.

803.07.1 Drilled Shaft: Payment for drilled shafts will be made at the contract unit price per linear foot and shall include, but not be limited to, the following when necessary:

- All materials and equipment required for excavating, pumping, furnishing and placing casings;
- Furnishing and placing concrete and reinforcement;
- Removing casings;
- Casings left in place;
- Slurry, slurry testing, equipment for performing testing, and disposing of slurry; and,
- Disposing of excess excavated material.
- No payment will be made for concrete required to fill oversize casings or excavation.

Acceptance and payment for drilled shaft concrete will be on a lot basis at the contract unit price per linear foot, adjusted in accordance with the following provisions. A lot will be considered as a continuous identifiable

placement that is completed in one day. Multiple shafts placed on the same day but in a non-continuous placement operation will require separate lots for each identifiable placement. Six cylinders per lot will be tested for compressive strength; in the event of sudden cessation of operation, a minimum of three cylinders will constitute a lot. Acceptance and payment for each lot will be made in accordance with Section 901.

Authorized overruns shall be paid as follows:

Payment for shaft lengths in excess of plan length, up to and including 16 feet, will be made at the contract unit price per linear foot. When reinforcing splices are required due to increases in shaft length up to and including 16 feet, the additional deformed reinforcing steel required for splices will be paid for at the contract unit price. No other compensation will be made for increases in shaft lengths up to 16 feet; and,

Payment for that portion of shaft length increased greater than 16 feet will be made in accordance with 109.04.

No compensation will be made for abandoned casings, concrete, etc. that remain in place. When the drilled shaft is found defective, core sampling, additional CSL testing, and non-destructive testing will be at no additional cost to the Department. If the shaft is accepted, only core sampling and grouting will be paid for by the Department and the payment will be made in accordance with 109.04.

803.07.2 Technique Shaft: Payment will be made at the contract unit price per linear foot for shafts installed and accepted, including any removal. Payment for shafts required by the engineer but not specified by the plans, except when required for acceptance of polymer slurries, will be made in accordance with 109.04.

803.07.3 Permanent Casing: Payment for permanent casing will be made at the contract unit price per linear foot.

803.07.4 Test Shaft

Payment will be made at the contract unit price per linear foot for shafts installed and accepted including any removal. Payment for shafts required by the engineer but not specified by the plans, except when required for acceptance of polymer slurries, will be made in accordance with 109.04.

803.07.5 Static Load Test: Payment for static load tests will be made at the contract unit price per each test performed and accepted and shall include all labor, materials, equipment, and incidentals necessary to perform the required testing.

803.07.6 High-Strain Dynamic Test: Payment for the High-Strain Dynamic test will be made at the contract unit price per each load test

performed and accepted. Payment includes all costs related to performing the load test, testing services, and reports by engineering consultant.

803.07.7 Force Pulse (Rapid) Test: Payment for the Force Pulse (Rapid) test will be made at the contract unit price per each load test performed and accepted. Payment includes all costs related to performing the load test, testing services, and reports by engineering consultant.

803.07.8 Bi-Directional Load Cell Test: Payment for Bi-Directional Load Cell test will be made at the contract unit price per each load test performed and accepted. Payment includes all costs related to the following:

- Load cells, load testing instrumentation, and installation;
- Performing the load test and testing services;
- Any delays due to the non-destructive testing schedule; and,
- Reports furnished by the engineering consultant.

803.07.9 Crosshole Sonic Log Test: Payment for Crosshole Sonic Log test will be made at the contract unit price per each drilled shaft tested and shall include the following:

- Furnishing and installing access tubes for CSL testing and non-destructive testing;
- Dewatering and grouting access tubes;
- Any delays due to CSL testing and non-destructive testing schedule;
- All labor, materials, equipment, and incidentals necessary to perform the required testing; and,
- Furnishing the Integrity Test report.

803.07.10 Non-Destructive Test: Payment for the Non-Destructive test will be made at the contract unit price per each drilled shaft tested and shall include all labor, materials, equipment, and incidentals necessary to perform the required installation of instrumentation and testing.

Payment will be made under:

Item No.	Pay Item	Pay Unit
803-01	Drilled Shaft (Diameter)	Linear Foot
803-02	Test Shaft (Diameter)	Linear Foot
803-03	Technique Shaft (Diameter)	Linear Foot
803-04	Static Load Test (Diameter)	Each
803-05	High-Strain Dynamic Test (Diameter)	Each
803-06	Force Pulse (Rapid) Test (Diameter)	Each
803-07	Bi-Directional Load Cell Test (Diameter)	Each
803-08	Crosshole Sonic Log Test (Diameter)	Each
803-09	Non-Destructive Test (Diameter)	Each
803-10	Permanent Casing (Diameter)	Linear Foot

Section 804
Piles

804.01 DESCRIPTION. Furnish and install piles of the specified type, dimensions, locations, elevations, and resistance with an undamaged cross section.

804.02 MATERIALS. Materials shall comply with the following sections and subsections.

Precast Concrete Piles	805
Concrete	901
Granular Material	1003.09
Coal Tar Epoxy Polyamide Paint	1008.04
Reinforcing Steel	1009.01
Steel H-Piles	1013.09
Steel Pipe Piles	1013.11
Timber Piles	1014

804.03 SUBMITTALS. Conform to Section 801. Provide submittals as required by the contract.

804.03.1 Pile Installation Plan: Submit a Pile Installation Plan describing the proposed pile driving system for review. Do not transport the pile driving equipment to the project site until acceptance is achieved. Submit the Pile Installation Plan no later than 30 calendar days prior to commencing pile operations. The engineer will evaluate the Pile Installation Plan for conformance with the plans and specifications. Within 21 calendar days after receipt of the Pile Installation Plan, the engineer will give notification of acceptance or if any additional information is required and/or changes that may be necessary to meet the plans and specification requirements. Resubmit any parts of the submittal that are rejected with changes as agreed upon for reevaluation. The engineer will give notification within seven calendar days after receipt of proposed changes, of their acceptance or rejection.

No changes in the driving system or installation method shall be made after final acceptance without the concurrence of the engineer. Provide at least the following information in the Pile Installation Plan:

1. Pile and Driving Equipment Data Form. The Department will supply this standard form. Complete the form with the proposed pile driving equipment for each unique pile driving system that will be used on the project.

Separate forms shall be used for each different pile driving system according to pile type and size. When a hammer cushion or pile cushion is composed of differing materials with varying properties, provide a detailed description of the composite cushion. Describe the material type, layout, and thickness of each cushion component.

2. Procedures for documenting pile construction logs and names and contact information for assigned personnel.

3. A list of equipment to be used to install the piles.

Perform and supply a drivability analysis to demonstrate the adequacy of the hammer as indicated in 804.03.1.2 using the wave equation method. Calculations shall be sealed, signed, and dated by a Louisiana registered professional engineer.

4. Proposed pile driving methods that may be required to facilitate pile driving installation such as preboring or jetting.

5. Detailed drawings of any proposed followers.

6. Detailed drawings of templates.

7. Identify use and location of pile splices, shoring, sheet piling, cofferdams, etc.

8. Pile driving sequence for each unique pile layout configuration.

9. Details of proposed load test system, equipment, and procedures in accordance with 804.10. Calculations shall be sealed, signed, and dated by a Louisiana registered professional engineer.

10. Proposed schedule for test pile and/or indicator pile program and production pile driving.

11. Details of the access system for attaching instrumentation for dynamic monitoring.

12. Other information shown on the plans or required by the engineer.

804.03.1.2 Pile Driving System Drivability Analysis: Provide a drivability analysis using the wave equation program (WEAP) to the engineer for each pile type and size required on the plans. Consider all critical conditions (i.e., scour, excavation, etc.) to determine the estimated driving resistance (blows per foot), and maximum tensile and compressive stresses during driving and end-of-drive conditions. Analyze splices, casing used, prebored holes, jetting, and other driving methods, if proposed. Verify driving conditions at various locations if the soil conditions change within the project area. Acceptance of the pile driving system will be based on the wave equation analysis computer program and as required elsewhere in this subsection. Provide sealed, signed, and dated calculations by a Louisiana registered professional engineer. Acceptance of the pile driving system does

not relinquish responsibility for driving the piles to the required pile tip elevation without exceeding the allowable pile stress limitation or causing damage.

The acceptance criteria used to evaluate the pile driving system from the wave equation will be the pile driving resistance and pile driving stresses. The target number of hammer blows at the required end of driving pile resistance for bearing piles shall be a maximum of 120 blows per foot. The pile driving resistance at any depth above the required pile tip elevation shall be less than 240 blows per foot. Do not exceed the maximum allowable pile driving stresses in 804.07.6.

The drivability analysis is based on the maximum driving resistance needed to obtain minimum penetration requirements specified on the plans, and overcome resistance of soil that cannot be counted upon to provide axial or lateral resistance throughout the design life of the structure; e.g., material subject to scour or down drag, and obtain the required bearing resistance.

When the wave equation analysis shows the proposed equipment or methods will result in either the inability to drive the pile with a reasonable driving resistance to the desired pile capacity or will exceed the maximum allowable pile driving stresses, modify or replace the proposed methods or equipment at no expense to the Department until subsequent wave equation analyses indicate that the proposed pile driving system and driving methods meet the required criteria for acceptability stated herein. As mentioned above, ultimate acceptance of the pile driving system is contingent upon trial and continued satisfactory performance in the field. The engineer may require further modification of the driving system if field observations indicate that the driving system is inadequate for any of the proposed driving operations for the project.

Make any required changes, including supplying additional hammers, which may result from unsatisfactory field performance.

804.03.1.3 Construction Site Survey Plan: When an item is included in the Contract for construction site survey, submit a Construction Site Survey Plan to the Project Engineer for review at least 30 calendar days prior to mobilization to the project site.

Describe how the construction site survey will be performed, equipment to be used, schedule and how data and information will be reported. Comply with the plans for the survey limits and features to be surveyed. Plan limits may be extended and features added by the Project Engineer. Show survey limits and features to be surveyed including owner names and addresses.

Provide the names and addresses of the Professional Engineer and the Professional Land Surveyor performing the work. Provide language to be used in the access request letters.

Do not mobilize to the site until acceptance of the Construction Site Survey Plan.

804.03.1.4 Vibration Monitoring Plan: When an item is included in the Contract for vibration monitoring, submit a Vibration Monitoring Plan to the Project Engineer for review at least 30 calendar days prior to commencing pile driving activities or construction activities that may produce vibrations.

Describe how vibration monitoring will be performed, any equipment to be used, the schedule, and how the data and information will be reported. Comply with the plans for the limits and features to be monitored. Plan limits may be extended and features added by the Project Engineer. Show survey limits and features to be monitored.

Do not begin pile driving operations until acceptance of the Vibration Monitoring Plan.

Upon completion of pile driving operations, submit to the Project Engineer for record a comprehensive report for each feature monitored during the pile driving operations.

804.03.2 Pre-construction Site Survey: Submit to the Project Engineer for review the Pre-construction Site Survey. Do not begin pile driving activities or construction activities that may produce vibrations until acceptance of the survey.

804.03.3 Pile Construction Log: Prepare a pile construction log document on each pile driven. Use the standard form supplied by the Department. Fully document the work performed relevant to pile driving activities. Each log shall be signed by the contractor's assigned supervisor of the work as identified in the Pile Installation Plan, and the Department's inspector. Submit the log to the Project Engineer within 24 hours of completion of the corresponding activity. Include at least the following information on the log:

- Pile identification number.
- Pile type and dimensions.
- Pertinent reference elevations including plan and as-built pile tip elevations
- Pile driving template.
- Depth and diameter of predrill or jetting.
- Hammer type.

- Pile cushion type, thickness and condition before and after driving.
- Instrumentation performed on the pile.
- Blow count and stroke height for every foot of drive.
- Observations such as work stoppages, equipment problems, pile cracking, pile damage, etc. with associated depth of penetration.
- Weather conditions during pile driving.
- Recorded ground vibrations if being measured.

804.03.3.1 Vibration Monitoring Report: Submit to the Project Engineer for review the Vibration Monitoring Report in accordance with 804.12.7 upon completion of pile driving activities or construction activities that may cause vibrations. Acceptance of the work will be contingent on acceptance of the Vibration Monitoring Report.

804.03.3.2 Post-construction Site Survey: Submit to the project engineer for review the post-construction site survey upon completion of pile driving activities or construction activities which may create vibrations. Acceptance of the work will be contingent on acceptance of the post-construction site survey.

804.03.3.3 Cast-in-Place Concrete Piles: Cast-in-place concrete piles shall be steel encased. Steel shells shall be of the specified diameter and type. Shells for cast-in-place concrete piles shall be of sufficient thickness and strength so that the shell will hold its original form and show no harmful distortion after it has been driven. Determine the shell wall thickness, if required. Fill the shell with Class A1 concrete and place in accordance with Section 805. When reinforcing steel is required, comply with Section 806.

804.04 PILE LENGTHS. Furnish piles in accordance with an itemized order list, which will be provided by the engineer, showing the number, size, length, and location of all permanent piles. Do not fabricate permanent piles prior to receipt of this order list. The lengths given in the order list will be the lengths that are assumed to remain in the completed structure after cutoff. At no expense to the department, increase the pile lengths to provide for fresh heading and for such additional length as may be necessary to suit the method of operation. When test piles or indicator piles are required, the pile lengths shown on the plans are for estimation purposes only. The approved order list will not be furnished until the test piles or until indicator piles have been driven, tested, and analyzed.

804.05 PILE DRIVING EQUIPMENT.

804.05.1 Hammers: Do not use non-impact hammers such as vibratory hammers unless specified on the plans or permitted in writing by the engineer. Hammers shall be rated based on the theoretical potential energy. Calibration of hammers and associated equipment shall be as required by the hammer manufacturer.

Provide methods and components for measuring hammer energy. For open-end diesel hammers, provide the Project Engineer a chart from the hammer manufacturer equating stroke in feet and blows per minute, and an approved device to determine and display ram stroke in feet.

804.05.2 Drive System Components and Accessories:

804.05.2.1 Hammer Cushion:

Equip all impact pile driving equipment designed to be used with a hammer cushion with a suitable thickness of hammer cushion material to prevent damage to the hammer and pile and to ensure uniform driving behavior. Hammer cushions shall be made of durable, manufactured materials, provided in accordance with the hammer manufacturer's guidelines. Wood, wire rope, and asbestos hammer cushions will not be allowed. Place a striker plate, as recommended by the hammer manufacturer, on the hammer cushion to ensure uniform compression of the cushion material. Inspect the hammer cushion in the presence of the engineer when beginning pile driving at each structure and after every 100 hours of use during pile driving operations. Replace the cushion when the hammer cushion begins to deteriorate or when the reduction in thickness exceeds 25 percent of the original thickness.

804.05.2.2 Helmet: Provide a properly sized helmet or drive head to piles driven with impact hammers to distribute the hammer blow to the pile head. Axially align the helmet with the hammer and the pile. The helmet shall be guided by the leads, not free-swinging. Fit the helmet around the pile head to prevent transfer of torsion forces during driving, while maintaining proper alignment of hammer and pile.

For special types of piles, provide appropriate helmets, mandrels, or other devices in accordance with the manufacturer's recommendations.

804.05.2.3 Pile Cushion: Protect the heads of precast concrete piles with a pile cushion made of plywood, hardwood, or a composite plywood and hardwood material. Store the pile cushion to prevent wetting. Wet or cracked cushions shall not be used. The minimum pile cushion thickness shall be established with the drivability analysis and modified based on field observation and/or dynamic monitoring results. Match pile cushion

dimensions with the dimensions of pile. Provide a new pile cushion for each pile driven, unless otherwise permitted by the engineer. Replace the pile cushion during pile driving when the cushion begins to deteriorate or burn. Do not determine pile resistance using a new pile cushion until after the pile has been driven a minimum of 5 feet or 100 blows.

804.05.2.4 Leads: Use pile driving leads that align vertical and battered piles, along with the hammer, in proper position throughout the driving operation. Construct leads in a manner that affords freedom of hammer movement while maintaining alignment of the hammer and the pile to ensure concentric impact for each blow.

Leads may be fixed, semi-fixed, or swinging type. Fit with a pipe gate at the bottom of the leads when using swinging leads. Embed leads adequately in the ground or the pile constrained in a structural frame, such as a template to maintain alignment.

Design leads to permit proper alignment of battered piles when applicable.

804.05.2.5 Templates: Provide a rigid and securely anchored template when swinging leads are used. When driving battered piles with swinging leads, use a two-tiered template or a template equipped with a device to hold the pile at the required batter. Support the bottom of the leads on the template. Construct the template to allow the pile to pass freely through the template without binding.

804.06 PREPARATION FOR INSTALLATION OF DRIVEN PILES.

804.06.1 Site Preparation:

804.06.1.1 Excavation: Do not drive piles until after completing the excavation. Remove all material forced up between the piles to the correct elevation before placing concrete for the foundation.

804.06.1.2 Abutment (End Bent) Fill: Construct the embankment at bridge ends to full height in accordance with 813.03 before driving affected piles. Drive piles through compacted embankment using prebored holes limited in depth to the height of the embankment.

804.06.1.3 Cofferdams: Prior to driving any piles, monitor the external stability of the ground outside of the cofferdam, wall inclination, and depth of excavation within the cofferdam to ensure the stability of the cofferdam. Complete all excavation within the cofferdam prior to driving piles. Inspect the depth of the excavation within the cofferdam for proper depth with a weighted line or other accepted method.

804.06.1.4 Cone Penetrometer Test (CPT) Assistance: When required by the plans, make arrangements with the Department to have the

CPT soundings taken at least 30 calendar days prior to driving test piles or indicator piles. Provide equipment to assist in moving the CPT truck around the site. The site for the soundings shall be level. Assist the Department in surveying the location and elevation of the CPT soundings.

804.06.2 Piling Preparation:

804.06.2.1 Transportation, Handling, and Storage of Piling: Provide adequate support for piles to prevent damage.

804.06.2.2 Collars: Provide collars, bands, or other accepted devices when required by the plans to protect timber piles against splitting or brooming.

804.06.2.3 Painting of Piling: Clean and paint the exterior surface of steel piles from the top of the pile to the elevation shown on the plans. Use a 2 coat coal tar epoxy polyamide paint system in accordance with Section 811.

804.06.2.4 Splicing Piles: Precast Concrete Piles: Furnish unspliced precast concrete piles and drive in full lengths, unless otherwise specified on the plans.

Steel Piles: Limit splices to two field splices per pile. Splice steel piles by welding with full penetration welds in accordance with Section 809.

Timber Piles: Furnish timber piles and drive full length.

804.07 CONSTRUCTION REQUIREMENTS.

804.07.1 Preboring: The size and depth of the prebored hole shall be included in the Pile Installation Plan. The depth of prebored holes shall not be below the scour elevation, unless accepted by the Engineer of Record.

Develop the preboring depth limits based on the soil information obtained from soil boring logs or CPTs. Upon installation of the pile, fill voids around the pile with granular material, meeting the requirements of 1003.09, and saturate with water.

804.07.2 Jetting: The use of jetting shall be included in the Pile Installation Plan. The depth of jetting shall not be below the scour elevation, unless accepted by the Engineer of Record.

Do not jet in footings, header banks, or in areas where stability of embankments or other structures would be endangered. Develop the jet pipe penetration limit to minimize the pile skin friction disturbance and to permit pile installation to the required pile tip elevation. Develop the jet pipe penetration limits based on soil information obtained from soil boring logs or CPTs and include in the Pile Installation Plan.

Use only one jet pipe when pre-jetting a hole prior to placing and driving the pile or when driving is interrupted and the jet is placed inside a steel pipe pile or a voided concrete pile. Use a minimum of two jets when jetting piles and driving concurrently using external jets. When using concurrent jetting and driving, keep the jets above the advancing pile tip. Cease jetting operations after reaching the jet penetration limit, and then drive the pile to the final tip elevation. Determine the pile resistances from the results of driving only after the jets have been withdrawn. Control and dispose of all jet water in accordance with Section 107.

804.07.3 Followers and Underwater Hammers: Include any use of followers and underwater hammers in the Pile Installation Plan. Provide the follower with a socket or hood, carefully fitted to the pile head to minimize energy losses and prevent pile damage.

804.07.4 Location and Alignment Tolerance: In pile bents, the horizontal location of the final top center of the pile shall be within 3 inches of the plan location measured perpendicular to the centerline of the cap and within 6 inches of plan location measured along the centerline of the cap. For footing piles, the horizontal location of the final top center of the pile shall be within 6 inches of plan location. The vertical location of the final top center of the pile shall be plus or minus 2 inches of plan cut-off elevation.

The axial alignment shall be within 2 percent of the specified alignment shown on the plans. The axial alignment will be checked on a minimum 5 feet of exposed pile. The engineer may suspend driving in order to check the pile alignment. Do not pull laterally on piles to correct misalignment. Do not splice a properly aligned section onto a misaligned section or build up a properly aligned section onto a misaligned section.

If the location or alignment tolerances are exceeded, provide the engineer with a sketch showing the actual versus plan positions of all piles in the bridge element along with proposed corrective measures. Corrective measures submitted with design documentation may be considered and reviewed by the Department. In pile bents, a pile with top center horizontal deviation from plan location measured perpendicular to the cap centerline by an amount greater than the specified tolerance plus 20 percent of the pile least dimension is not acceptable, and will require removal. The Department will not be responsible for any cost or time necessary for correction of out-of-tolerance piles. All design work shall be sealed, signed, and dated by an engineer licensed in Louisiana and documented on plan sheets meeting the format requirements of 801.05.2, and included in the contract plans. Compensation to the Department

for review and evaluation of resulting design work shall be according to 105.03.

804.07.5 Installation Sequence: The installation sequence for individual piles in a footing shall be one of the following options:

- From the center of the pile group outward;
- By rows from the center of the pile group to the side; or,
- By rows from one side of the pile group to the other side.

804.07.6 Pile Driving Stresses: Drive the piles without exceeding the maximum allowable driving stresses. For steel piles, do not exceed a compressive driving stress of 90 percent of the yield stress of the pile material. For timber piles, do not exceed a compressive driving stress of 3600 psi. For precast prestressed concrete piles, do not exceed the tensile and compressive driving stresses in Table 804-1.

Table 804-1
Maximum Allowable Driving Stresses [1]

Tensile Driving Stress (Normal Environments): U.S. Units $3\sqrt{f'_c} + f_{pe}$
Tensile Driving Stress (Corrosive Environments): U.S. Units f_{pe}
Compressive Driving Stress (All Environments): U.S. Units $0.85\, f'_c - f_{pe}$
f'_c = Concrete Compressive Strength, psi f_{pe} = Effective Prestress, psi

[1] Reference FHWA-HI-91-013 *"Design and Construction of Driven Pile Foundations."*

If indicated on the plans, use the allowable driving stresses for a corrosive environment.

804.07.7 Extent of Driving: Drive piles to the plan tip elevation or the order list tip elevation in accordance with the plans and specifications. If the penetration requirements and bearing capacity are achieved within 5 feet above the plan tip elevation or order list tip elevation, the engineer may consider penetration and capacity requirements to be satisfied. If penetration and bearing capacity requirements are not achieved within 5 feet above the plan tip elevation or order list tip elevation, acceptance from the engineer of record shall be required to terminate pile driving. Pile embedment shall not be less than 20 feet below the bridge scour elevation, unless indicated on the

plans. Use the following requirements to evaluate satisfactory penetration and resistance.

804.07.7.1 Pile Penetration Requirements: Practical refusal blow count depends on the site soil profile, the pile type, and hammer manufacturer limitations to prevent hammer damage. Practical refusal is broadly defined as a rate of 20 blows per inch at maximum stroke, for 3 consecutive inches. However, depending on site conditions, this criterion may not always be applicable. If practical refusal is encountered above the required plan tip elevation or order list tip elevation, a larger hammer capable of achieving the required penetration or pile installation techniques, such as preboring or jetting, may be required. Assure that the hammer is in proper working order. If hammer performance needs to be evaluated, the engineer may require dynamic monitoring. If the hammer performance indicates that pile driving system efficiency is not satisfactory, adjust the pile driving system until satisfactory performance is observed. Obtain written acceptance from the engineer before implementing changes to the accepted Pile Installation Plan, including early termination of driving. The cost of dynamic monitoring due to unsatisfactory hammer performance and any resulting delays shall be at no expense to the Department.

804.07.7.2 Pile Resistance Requirements: Determine pile resistance throughout driving in accordance with 804.09 and the plan information.

If pile resistance is less than expected, leave the pile approximately 1 foot above cut-off elevation to allow for evaluation. One or more of the following actions may be taken as coordinated with the Chief Construction Engineer: perform a restrike to check for increased resistance due to soil set-up, load pile to determine its ultimate resistance, or continue to drive until obtaining satisfactory resistance. If resistance results are affected by excess pore water pressure, or if this condition was observed during field testing of test, indicator, or monitor piles, perform restrikes as directly by the engineer to determine resistance after sufficient dissipation of excess pore water pressure has occurred.

804.07.8 Production Pile Restrikes: Perform all pile restrikes with a warm hammer that has applied a minimum of 20 blows to another pile or dummy block immediately before being used to restrike the selected pile. For precast concrete piles, use the original pile cushion used during initial driving. If the original pile cushion used to drive precast concrete piles is no longer in acceptable condition, use another similarly used cushion that is in acceptable condition. During restrike, achieve a maximum penetration of 3 inches or a

maximum of 20 blows, whichever occurs first. Report restrike blow counts as the number of hammer blows per increment of 1 inch.

804.07.9 Heaved Piles: If pile heave is observed, take level readings referenced to a fixed datum on all piles within a 15-feet radius after installation and periodically thereafter as adjacent piles are driven to determine the pile heave range. Continue measurements until the engineer determines that such checking is no longer required. Redrive all end bearing piles that have heaved more than ½ inch to the required resistance or penetration at no expense to the Department. Do not place concrete in pile casings until all piles in a footing have been driven.

804.07.10 Pile Extensions:

804.07.10.1 Cast-in-Place Extension of Precast Concrete Piles: A cast-in-place extension, excluding cutback, of 5 feet maximum is allowed when constructed in accordance with the plans. Driving the pile extension is not allowed. The final cut of the concrete shall be perpendicular to the axis of the pile. Thoroughly clean and wet the top of the pile prior to placing concrete.

804.07.10.2 Steel Piles: When permitted or shown on the plans, extend a steel pile by welding splice in accordance with Section 809.

804.07.11 Pile Cut-Offs

804.07.11.1 Precast Concrete Piles: Cut off perpendicular to the axis of the pile at the cut-off elevation shown on the plans. Exercise care to minimize spalling of concrete below the cut-off elevation.

804.07.11.2 Steel Piles: Cut off perpendicular to the axis of the pile at the cut-off elevation shown on the plans. Cuts shall be made in clean straight lines. Correct all irregularities due to cutting or burning by grinding or depositing weld material prior to placing caps.

804.07.11.3 Timber Piles: Saw off horizontally or as shown on the plans at the specified cut-off elevation. When piles support timber caps, saw to a horizontal plane or to the slope specified to fit the cap. Do not shim on tops of piles. Treatment of pile heads shall conform to 812.06.

804.07.11.4 Cast-In-Place Concrete Piles: Cut off perpendicular to the axis of the pile at the cut-off elevation shown on the plans after pile shells are fully driven, inspected, and accepted.

804.08 UNSATISFACTORY PILES. All damaged piles with diagonal or longitudinal cracking, transverse cracking, or other unsatisfactory conditions will be inspected by the engineer for further evaluation.

Correct all piles that do not meet location and alignment tolerances, do not achieve required resistance, or sustain damage. Do not manipulate piles to force them into proper position. All replaced or repaired piles shall be corrected at no expense to the Department.

804.08.1 Concrete Pile Repair: Cracked concrete piles will be rejected unless repaired as follows:

1. Piles with diagonal or longitudinal cracks will be rejected unless the pile meets the required penetration and resistance and can be cut off below the crack and extended with an approved structural repair.

2. Repair transverse cracks that show evidence of spalling with a patch and epoxy injection or a structural buildup.

3. Use epoxy injection to repair transverse cracks that show dusting during driving. Stop driving at the first sign of dusting and inject an epoxy into the crack to cure in accordance with the epoxy manufacturer's recommendations before driving is resumed. Use an approved epoxy product listed in the AML in accordance with Section 1017.

4. Repair minor hairline surface cracks in corrosive environments. In non-corrosive environments, minor hairline surface cracks will not be cause for rejection or repair, provided no change in the crack condition occurs during driving.

804.08.2 Steel Pile Repair: Damaged steel piles will be rejected unless repaired by removing damaged sections and replacement by a new steel section with full penetration welding in accordance with Section 809; replace protective coating in accordance with Section 811, when applicable.

804.08.3 Timber Pile Repair: If a timber pile breaks or splits longitudinally before reaching 5 feet of final tip elevation, it shall be rejected, removed, and replaced. If a timber pile has reached final tip elevation, but mushrooms at the top, it may be accepted if approved by the engineer.

804.09 DETERMINATION OF PILE RESISTANCE. Pile resistance is obtained during the end-of-driving or pile restrike. Determine the pile resistance by use of the test pile loading results, wave equation, dynamic load testing, or FHWA Modified Gates dynamic formula when specified on the plans.

804.10 FIELD TESTING PILES. Install test piles, indicator piles, or monitor piles of the length, number, size, and type specified at the location and penetration shown on the plans. Use the accepted Pile Installation Plan when installing piles. Consideration shall be given to the location of instrumentation with respect to mudline, template location, or water surface to avoid damage to the instrumentation. Add a minimum length of 2.5 times the pile size to test and indicator piles for attaching the dynamic testing instrumentation. Permanent piles may require field testing if indicated on the plans or as determined by the engineer**.**

804.10.1 Ultimate Pile Resistance: Ultimate pile resistance is the resistance that has been determined from either a static or dynamic load test of a test pile, indicator pile, or permanent pile.

804.10.2 Test Piles: Test piles are piles driven in advance of the permanent piles for purposes of determining pile length by static load testing. Test piles shall be long enough to be re-driven, if necessary, to the plan tip elevation of the nearest permanent pile. Test pile length shall be long enough to permit static load testing and dynamic monitoring for the driven length. Test piles shall be a new fabrication of the same design and cross section as the permanent piles it represents. Variations shall be accepted by the Chief Construction Engineer. The Fabrication Engineer shall be notified one week prior to casting. All test piles and/or indicator piles will be inspected by DOTD Fabrication Inspectors prior to delivery to the project.

804.10.3 Indicator Piles: Indicator piles follow the same specifications as test piles, except that a static load test is not anticipated. Indicator piles will require dynamic monitoring.

804.10.4 Monitor Piles: Monitor piles are permanent piles monitored during driving and restrikes using dynamic monitoring. The monitor pile is paid for as a permanent pile.

804.10.5 Pile Restrikes: Perform pile restrikes for test piles, indicator piles, or monitor piles in accordance with the time intervals specified below unless shown otherwise on the plans or as directed by the engineer. Restrike test piles within 24 hours after initial installation and make another restrike within 24 hours after load test. Perform a 24-hour and a 14-day restrike on indicator piles and a 24-hour restrike on monitor piles.

804.10.6 Test Site Preparation: Test pile and/or indicator pile shall model the subsurface conditions of the permanent piles at the most critical location. At the test pile location, excavate all overburden to the elevation shown on the plans and keep this excavation open during driving and loading. In lieu of the above, drive the test pile within an approved metal casing.

Provide a rigid and securely anchored template when swinging leads are used as specified in 804.05.2.5. Alignment tolerances of 804.07.4 shall apply. Provide any bracing or strengthening of the test pile required during loading or driving operations.

Fill cast-in-place concrete piles with concrete in accordance with 804.03; allow the concrete to set for at least 48 hours and attain a minimum compressive strength of 4000 psi before load testing.

804.10.7 Static Load Test: Load piles in accordance with ASTM D1143, Procedure A: Quick Test, except as noted below. Load piles at least 14 calendar days after initial driving unless otherwise directed by the engineer. All pile loading results will be evaluated by the engineer to determine pile length.

804.10.7.1 Loading Procedure: Apply the load in at least 20 equal increments or as directed. Hold each load increment for a period of five minutes. Load the pile to failure or until reaching the specified maximum test load shown on the plans. The pile will be considered to have failed when continuous jacking is required and continuous pile movement is measured. Unless otherwise directed, maintain load until the gross settlement has reached 10 percent of the pile width or diameter.

After the plunging load and failure deformation have been achieved, allow the loading system to equalize until pile movement and variations in jack pressure have ceased.

Remove load in decrements of 20 percent of the maximum load placed on the pile. Record gross settlement and load readings five minutes after reaching each unloading load decrement. Record the final recovery of the unloaded pile until movement is essentially complete for a period up to 30 minutes.

804.10.7.2 Hydraulic Jack: Calibrate the entire hydraulic system for all stages of loading and unloading through an accepted independent calibration service. Provide a certified laboratory report of the calibration tests to the engineer. This calibration shall be performed no more than 30 days prior to load test commencement. After the system is calibrated, no replacement parts will be permitted (except the pump) without recalibration of the system.

804.10.7.3 Displacement Instrumentation: Furnish instrumentation to monitor the gross displacement readings at the pile head during load testing. The instrumentation shall consist of three independent dial or electronic readout gauges capable of measuring displacement to a precision of ± 0.001 inches, with a minimum travel range of 4 inches or

15 percent of maximum pile width or diameter for circular piles, whichever is greater. Provide smooth bearing surfaces perpendicular to the direction of the gauge stem travel for each gauge.

804.10.8 Dynamic Load Test: Assist the Department in obtaining dynamic measurements with the Department's dynamic monitoring of test piles, indicator piles, monitor piles, and permanent piles during initial pile driving and during pile restrikes. Supply a temporary tent or shelter of sufficient size to cover the instruments and the operator/engineer from direct sunlight and rain during the dynamic test.

The cost of equipment, mobilization, or any delays due to dynamic monitoring shall be included in the item for Dynamic Monitoring Assistance.

804.10.9 Dynamic Monitoring Scheduling: Notify the project engineer at least 14 calendar days before the scheduled date of driving piles to be monitored. In addition, a minimum 24-hour-notice shall be given for projects staffed with full-time dynamic testing personnel. Allow a possible three calendar day delay for any scheduling conflicts of the Department's pile monitoring personnel. Confirm the driving date three working days prior to the scheduled driving date. The pile to be monitored and the pile driving equipment shall be on site and at the location to be driven at least 24 hours prior to monitoring. Test the pile driving equipment the day prior to dynamic monitoring to ensure that it is in proper working order. The project engineer will notify the engineer to confirm that the pile and all associated pile driving equipment are on site, have been inspected and assembled, and are ready for driving operations at least 24 hours prior to dynamic monitoring. Allow for a possible seven day delay when rescheduling is required due to contractor delay. Once the three day notification is provided and monitoring personnel are mobilized, the contractor will be back charged for all costs arising from contractor delays in pile testing.

804.10.10 Dynamic Monitoring Assistance: Prepare attachment points for attaching dynamic monitoring instrumentation as shown on the plans. Furnish and install anchors for concrete piles and drill and tap holes for steel piles. Provide an AC power source at the location where the dynamic monitoring computer will be placed during the monitoring. No welding shall take place in the general vicinity during dynamic monitoring operations.

When directed by the engineer, make piles available prior to driving for drilling or tapping holes. Provide safe, stable, and OSHA approved access to the pile head with a working area of not less than 16 square feet and equip so that the platform may be raised to the top of the pile while the pile is located in the leads and that sufficient distance down from the top of the pile can be

achieved as specified in 804.10. Include details of the access system for attaching instrumentation for dynamic monitoring in the Pile Installation Plan. Include one hour in the Pile Installation Plan for the attachment of instruments to the pile for each monitoring event. Occasionally, the pile driving may have to be temporarily interrupted for the transducers to be adjusted or replaced, or the monitoring results assessed. Use reasonable care when working with the instruments and accessories. At no expense to the Department, replace any dynamic monitoring equipment damaged by the contractor.

804.10.11 Dynamic Monitoring Instrumentation: Furnish dynamic pile monitoring instrumentation and accessories, as specified on the plans, to be used during all pile driving operations. Purchase new dynamic pile monitoring instrumentation compatible with the Department's dynamic pile monitoring device. Submit a list of equipment for review and acceptance before any items are purchased. Order equipment within 10 days of receipt of the Notice to Proceed. Allow eight weeks delivery time for the new dynamic pile monitoring instrumentation items. Deliver equipment to the Department's Pavement and Geotechnical Services Section, 1201 Capitol Access Road, Baton Rouge, Louisiana, 70804. Instrumentation will become the property of the Department upon completion of all pile driving monitoring. Provide warranty information, manuals, documentation, and invoice copies to the Department's Pavement and Geotechnical Services Section upon delivery of equipment. Register all warranties in the name of the Department.

804.10.12 Redriving Test or Indicator Piles: When steel piles fail to reach the required ultimate pile resistance, requiring redriving, extend steel piles by splicing if necessary and redrive as directed.

Do not extend or redrive precast concrete, cast-in-place concrete test piles or indicator piles. Drive a new test pile to the designated depth at an accepted location.

804.10.13 Test Pile and Indicator Pile Removal: If test piles or indicator piles are not to be used as permanent piles, remove to a minimum of 3 feet below natural ground or stream bed or as shown on the plans; dispose of as directed.

When the resistance of a permanent pile is less than the required resistance, the engineer may direct loading of a permanent pile. When loading a permanent pile, conduct the loading in accordance with the procedure given in 804.10.7.1, except the test load will be as directed by the engineer.

804.11 CONSTRUCTION SITE SURVEY: A construction site survey consists of a Pre-construction Site Survey and Post-construction Site Survey. Conduct the surveys in accordance with the limits and features shown in the Construction Site Survey Plan.

Perform Pre-construction Site Survey prior to pile driving activities or construction activities which may create vibrations.

Perform Post-construction Site Survey upon completion of pile driving activities, construction activities which may create vibrations, or at the time specified by the Project Engineer.

804.11.1 Pre-construction Site Survey: Provide locations and elevations, including surveying/engineering notes, photographs, and video records of structures and features shown in the Construction Site Survey Plan. Provide written statements of the condition of each structure and feature.

Perform work under the direct supervision of a Louisiana Registered Professional Engineer who is familiar with the area.

Make every attempt to gain permission from property owners for access to property to perform the site survey, including sending a certified return receipt access request letter informing the property owner of the survey and requesting permission to survey the existing conditions. If the property owner refuses access, notify the Project Engineer and log all contacts with the property owner. Furnish the Project Engineer a list of property owners contacted prior to any pile driving operations, and include all pertinent information.

804.11.1.1 Locations and Elevations: Collect line (location) and grade (elevation) data at structure slab corners and driveway pavement within the site in accordance with the accepted Construction Site Survey Plan. Use a Louisiana Registered Surveyor. Reference project survey controls. Data on abutting drives and walks shall be taken at approximately 20-ft. intervals and at the point of juncture with any structure to which they are attached.

Deliver three copies of all field notes with sketches clearly showing reduced elevations to the Project Engineer.

804.11.1.2 Photographs: Collect a series of photographs showing the existing conditions of structures and features in accordance with the Construction Site Survey Plan. Take photographs along the site as follows:

1. General: Take photographs along the project centerline at 50 foot intervals showing the following views:
   a. Upstation view

b. Property line side view at each station (every 100 feet) perpendicular to the project centerline, and every driveway and all structures fronting the project centerline.

2. Bridge structures: Take photographs at both ends of existing bridge approaches facing the bridge structure. Take photographs at the roadway centerline in the direction of the roadway alignment. Document any movable spans in the open and closed positions.

3. Specific structures or features: Take photographs at locations determined by the Project Engineer.

804.11.1.3 Videos: Collect video showing the existing conditions of structures and features in accordance with the Construction Site Survey Plan. Take video along the site as follows:

1. General: as described in 804.11.1.2.
2. Bridge structures: as described in 804.11.1.2.
3. Streets
4. Residences: interior and exterior of each residence within the survey area, including fronts, interior walls, ceilings, and existing damage.
5. Sidewalks
6. Grass areas
7. Specific structures or features: Take video at locations determined by the Project Engineer.

Show existing damage of structures and features. Travel speed of camera shall not be greater than 50 ft. per minute.

Capture master field videos on 1080p High Definition Video or higher, with accompanying audio. Edit captured field videos with audio and video quality maintained on the edited copy. Identify videos on screen with date made. Title edited videos prior to each new video sequence and after every 30 minutes of normal video run time. Include in titles the project name and number, tape name and number, location, and date made. Deliver four copies of video, along with a duplicate of the master field video (unedited), to the Project Engineer.

804.11.2 Post-construction Site Survey: Upon completion of pile driving activities or construction activities which may create vibrations, perform a Post-construction Site Survey in accordance with 804.11.1.

804.12 VIBRATION MONITORING. Perform vibration monitoring in and around sensitive features as indicated in the Vibration Monitoring Plan, the Contract or as directed by the Project Engineer. Sensitive features may

include archaeological sites, historic features, utilities, instruments, structures, etc.

Use the services of a testing lab and a vibration specialist engineer, acceptable to the Project Engineer to develop the vibration monitoring plan and conduct seismic monitoring of vibrations during pile driving and other heavy equipment operations in areas that are not normally subjected to such operations. Render complete reports and interpretations of the data obtained including the possible effects of the measured vibrations on adjacent and surrounding structures. Acquire baseline vibration data for a period of at least 24 hours prior to beginning construction activities.

Perform vibration monitoring during Test Pile and Production Pile driving operations to verify that vibrations from construction activities are below required threshold values. Modify construction methods as necessary to stay below threshold values.

Peak particle velocity (PPV) is the maximum rate of change of position of a soil particle with respect to time, measured on the ground. The velocity magnitude is given in units of inches per second.

Frequency of vibration is the number of oscillations that occur in 1 second. The frequency units given are in hertz (cycles per second).

Provide seismic monitoring of vibrations during pile driving and other heavy equipment operations in areas subjected to such operations as specified on the plans. Use an independent third party Louisiana registered professional engineer to provide complete reports and interpretations of the data obtained including the possible effects of the measured vibrations on adjacent and surrounding structures.

804.12.1 Equipment and Instrumentation: Provide seismograph(s) with self-triggering units(s), accepted by the Project Engineer, and capable of recording three mutually perpendicular components (longitude, transverse, and vertical) of ground motion time histories, in terms of particle velocity. Provide units capable of reporting the frequency as well as the peak values for all vibration time histories.

The seismographs shall be Type I waveform recorders. It provides a particle velocity wave form or time history of the recorded event, sometimes in conjunction with peak event information. Independent chart recorders with separate motion transducers can be used in place of "stand-alone" monitors like seismographs when accepted by the Project Engineer.

804.12.2 Number and Location: Place seismographs and ground transducers in the ground outside and adjacent to the structure(s) or feature(s) to be monitored on the side facing the construction activity. Monitor

structure(s) in accordance with the Vibration Monitoring Plan, the Contract, and as directed by the Project Engineer. Exact transducer number and locations shall be as directed by the Louisiana registered professional engineer.

Vibration monitoring distance (VMD) is the distance from the construction activity to the limits of monitoring. Comply with the limits shown in Table 804-2, the Contract, and the Vibration Monitoring Plan.

Table 804-2
Vibration Monitoring Distance (VMD)

Maximum Distance	Receptor
200 feet	Residential and Commercial Structures
500 feet	Historical Structures, Industrial Structures, Sensitive Features, Settlement Sensitive Ground, Utilities, Instruments, & Archeological Sites

The number of seismographs required is dependent on the specific site. As a minimum, two seismographs of Type I are required on site. One seismograph will be used on site with one or more held in reserve for use at a specific complaint or potential complaint location.

804.12.3 Transducer Attachment (Coupling). Place transducers on the measurement surface and cover with heavy sandbags as directed by the Louisiana registered professional engineer.

804.12.4 Particle Velocity Controls and Threshold Limits: Limit ground particle velocity so that structural damage due to pile driving is avoided. Measure Peak Particle Velocity (PPV) with instrumentation and methods described 804.12.1. Peak particle velocity shall satisfy the following controls:

1. Limit PPV to values less than a specific control limit at the nearest structure, which is summarized in Table 804-3 for different types of structures.
2. Record particle velocities in three mutually perpendicular axes. The maximum allowable peak particle velocity reading will be that of any of the three axes.

Table 804-3
Limiting Particle Velocity

Structure and Condition	Limiting Particle Velocity (in/sec)
Historic Structures, Sensitive Features, Sensitive Instruments, and Sensitive Utilities	0.1
Residential Structures	0.5
Commercial and Industrial Structures	2.0
Bridges	2.0

804.12.5 Monitoring Ground Vibrations: Monitor ground vibrations at specified locations. All three components (longitudinal, transverse, and vertical) of particle velocity shall be measured and recorded. Background vibrations due to passing traffic or other activities should also be monitored prior to pile driving activities to establish a baseline.

Maintain a pile driving log for the full length of penetration and submit daily reports to the Project Engineer on piles driven and vibrations measured in accordance with 804.03.3. These logs shall be in the form specified in the Pile Installation Plan.

804.12.6 Application of the Particle Velocity Control: If 80 percent of the limiting particle velocity shown in Table 804-3 for the structure monitored is exceeded for any single axis, cease pile driving operations or the construction activity causing vibration, and notify the Project Engineer with a written report. Include in the report driving information, vibration measurement data, and the proposed corrective action. The Project Engineer will make a determination before proceeding with pile driving operations.

If 100 percent of the limiting particle velocity shown in Table 804-3 for the structure monitored is exceeded or more, cease operations and notify the Project Engineer with a written report. Include in the report driving information, vibration measurement data, and the proposed corrective action. Evaluate alternative pile installation equipment and techniques in case corrective/mitigation action is not effective. Adjusting pile driving operations will be at no additional cost or time to the Department.

Do not commence with pile driving operations until the Project Engineer acknowledges in writing that a pile installation change has been implemented. Modify the Pile Installation Plan accordingly.

Notify the Project Engineer immediately if visual inspection indicates that damage to structure(s) may be occurring due to vibrations, or if property

owners claim damage due to vibrations. Additional vibration monitoring or construction site survey may be required.

804.12.7 Vibration Monitoring Report: Submit to the Project Engineer a digital copy and hard copy of a comprehensive report for each structure and feature monitored. Include in each report a discussion of the following:

1. Site conditions and descriptions, including a site map drawn to scale showing the location of the structures and/or sensitive features and the location of the construction activity.
2. Field procedures and equipment used, including seismograph manufacturer, model and unit serial number.
3. The name of the seismograph operator.
4. A digital and hard copy of all ground vibration time histories, in units of velocity.
5. A record summary of the maximum value of ground vibration in any one of three directions measured (longitudinal, transverse, or vertical), the frequency associated with the maximum value in hertz, and the measured distance between the seismograph and the construction activity.
6. Construction activities including construction equipment used, environmental conditions such as temperature and relative humidity ranges during construction, and other activities that are not construction related (train activity, heavy traffic, flooding, etc.).
7. Analysis of results with conclusions and recommendations.
8. Any additional inclusions to the report(s) requested by the Project Engineer.

804.12.8 Archiving: Maintain copies of all submittals for at least 5 years, or until all pending litigation is completed.

804.13 MEASUREMENT.

804.13.1 Piles: Piles will be measured by the linear foot of installed and accepted pile below pile cut-off elevation. Redriving of permanent piles used as load test anchorages will not be measured for payment.

804.13.2 Splices: Pile splices will not be measured separately for payment.

804.13.3 Pile Extensions: No measurement will be made for extensions necessitated by damage to the pile during driving or overdriving error.

804.13.3.1 Precast Concrete Pile Extensions: Measurement of cast-in-place extensions on precast concrete piles will be made by the linear foot. The length of the extension is the cast length. The cast length will be the cut back plus the extension and will be multiplied by four to determine the quantity for payment. No deduction will be made from the ordered length of pile driven due to cut-back for extension.

804.13.3.2 Steel Pile Extensions: Measurement of extensions on steel piles will be made by the linear foot. The total number of linear feet of piling driven will be determined by adding 3 foot to the net length of piling for each authorized splice in place in the finished structure.

804.13.4 Pile Cut-Offs: Cut-offs will be measured by the linear foot. Measurement will not be made for cut-offs necessitated by crushing, brooming, splitting, or other damage resulting from driving. No measurement will be made for required cut-offs of cast-in-place concrete pile shells.

Cut-offs will remain the property of the contractor.

804.13.5 Test Piles and Indicator Piles: Test and indicator piles are measured per each. Measurement for payment includes removal. Piles pulled and reused as permanent piles will be measured as provided under 804.13.1.

804.13.6 Static Load Test: Load tests will be measured per each. The number of load tests will be the number of load tests performed and accepted.

804.13.7 Dynamic Monitoring Assistance: Dynamic Monitoring Assistance is measured per each satisfactory completion of monitoring. Measurement includes all equipment, material, labor, and time necessary to complete this item.

Dynamic monitoring occurrences that are necessary because of contractor error will not be measured for payment.

804.13.8 Dynamic Monitoring Instrumentation: Dynamic Monitoring Instrumentation is measured per lump sum, which includes all materials, equipment, tools, and incidentals necessary to complete this item. Quantity of materials and equipment is shown on the plans.

804.13.9 Cone Penetrometer Test Assistance: Measure CPT Assistance per each satisfactory completion of the test. Measurement includes all equipment, material, labor, and time necessary to complete this item.

804.13.10 Prebored Holes and Jetting: Prebored holes and jetting will not be measured for payment.

804.13.11 Construction Site Survey: Construction site survey will be measured per lump sum.

804.13.12 Vibration Monitoring Vibration monitoring will be measured per day. A day is defined as a day in which the contractor drives piles for at least 6 hours.

804.14 PAYMENT. Payment will be made at the contract unit price which includes all materials, equipment and labor necessary to complete the item.

804.14.1 Piles: Payment will be made at the contract unit price for the type and size of pile.

804.14.2 Pile Extensions: Payment will be made at the contract unit price for the type and size of pile extended.

804.14.3 Pile Cut-Offs: Payment will be made at the contract unit price for the type and size of pile cut-off.

804.14.4 Test Piles: Payment for test piles will be made at the contract unit price.

804.14.5 Indicator Piles: Payment for indicator piles will be made at the contract unit price. If determined from the driving records and the dynamic monitoring that the indicator pile should be load tested, the price will be negotiated.

804.14.6 Static Load Test: Payment for loading piles will be made at the contract unit price.

804.14.7 Dynamic Monitoring Assistance: Payment will be made at the contract unit price. Reimburse the Department for the expenses associated with the delays caused by the contractor.

804.14.8 Dynamic Monitoring Instrumentation: Payment for dynamic monitoring instrumentation will be made at the contract unit price.

804.14.9 Cone Penetrometer Test Assistance: Payment will be made at the contract unit price.

804.14.10 Construction Site Survey: Payment for construction site survey which includes pre-construction and post-construction site surveys will be made at the contract unit price which includes furnishing materials, tools, equipment, labor, and incidentals required to complete this item.

804.14.11 Vibration Monitoring: Payment for vibration monitoring will be made at the contract unit price which includes monitoring service, reporting and documentation of results, equipment, material, labor, and time necessary to complete the item.

Payment will be made under:

Item No.	Pay Item	Pay Unit
804-01	Precast Concrete Piles (Size)	Linear Foot
804-02	Treated Timber Piles (Type)	Linear Foot
804-03	Steel Piles (Type and Size)	Linear Foot
804-04	Cast-in-Place Concrete Piles (Size)	Linear Foot
804-05	Precast Concrete Test Piles (Size)	Each
804-06	Timber Test Piles	Each
804-07	Steel Test Piles (Type and Size)	Each
804-08	Cast-in-Place Concrete Test Piles (Size)	Each
804-09	Static Load Test (Type and Size)	Each
804-10	Precast Concrete Indicator Piles (Size)	Each
804-11	Timber Indicator Piles (Type)	Each
804-12	Steel Indicator Piles (Type and Size)	Each
804-13	Cast-in-Place Concrete Indicator Piles (Size)	Each
804-14	Dynamic Monitoring Assistance	Each
804-15	Dynamic Monitoring Instrumentation	Lump Sum
804-16	Cone Penetrometer Test (CPT) Assistance	Each
804-17	Construction Site Survey	Lump Sum
804-18	Vibration Monitoring	Day

Section 805
Structural Concrete

805.01 DESCRIPTION. Furnish, place, finish, and cure concrete in bridges, culverts and other structures.

Quality assurance requirements shall be as specified in the latest edition of the Department's publications titled *Application of Quality Assurance Specifications for Portland Cement Concrete Pavement and Structures* and *Application of Quality Assurance Specifications for Precast-Prestressed Concrete Plants.*

Conform to Section 802 for structural excavation and backfill.

805.02 MATERIALS. Comply with the following sections or subsections:

Steel Joints	815
Portland Cement Concrete	901
Mortar	1001.03
Joint Materials for Pavements and Structures	1005
Waterstops	1005.07
Reinforcing Steel	1009
Curing Materials	1011.01
Special Finish for Concrete	1011.03
Metals	1013
Steel Stay- in- Place Forms	1013.28
Concrete Pipe and Precast Reinforced Concrete Drainage Units	1016
Flexible Plastic Gasket Material	1016.01.1
Epoxy Resin Adhesives	1017
Form Release Agents	1018.06
Geotextile Fabric	1019

Use grout conforming to ASTM C1107. Prepare and test grout cubes in accordance with ASTM C109.

Classes of concrete furnished shall be as follows:

Table 805-1
Classes and Uses of Concrete

Concrete Class	Use
A1, A2, A3	Concrete exposed to sea water, and all other concrete except as listed herein.
MASS(A1), MASS(A2), MASS(A3)	Mass concrete
P1, P2, P3	Precast concrete
S	Drilled shafts, seals and underwater placements
M	Minor structure

805.03 FORMS.

805.03.1 Design and Construction: Comply with Section 817. Forms shall be mortar tight, designed and constructed so that finished concrete conforms to specified dimensions and contours. If required, design and construct forms to accommodate partial removal for finishing operations.

Where lower formed spaces are inaccessible, leave lower form sections loose so that they may be removed for cleaning formed spaces immediately before placing concrete. As far as practical, design forms so that form marks will conform to general lines of the structure.

When possible, forms shall be daylighted at intervals not greater than 10 feet vertically with openings sufficient to permit free access for inspection and working the concrete.

Set and maintain forms true to required line and grade until concrete sufficiently hardens.

When concrete is formed by soil, provide firm soil or compacted material.

805.03.2 Form Surface: Forms for exposed concrete surfaces shall not adhere to nor discolor concrete. Chamfer forms for exterior corners and round interior corners to prevent sharp corners. Bevel or draft projections and penetrations to ensure easy removal.

Treat forms with an approved form release agent prior to placement of reinforcing steel. Do not use release agents that will adhere to or discolor concrete.

Prior to treating form surfaces and placing concrete, clean the interior of forms of dirt, sawdust, shavings, and all other debris.

805.03.3 Form Ties: Design and construct form ties to withstand the forces of concrete placement and other applied loads. Construct metal ties or anchorages within forms to permit their removal to a depth of at least 1/2 inch from the face without damage to concrete.

805.03.4 Formwork and Surface Tolerances: Provide hardened concrete finish lines in accordance with plan dimensions and the tolerances specified in Table 805-2 prior to removal of formwork and shores. For tolerances not shown, conform to ACI 117.

For non-conforming formwork or concrete surfaces, submit a proposed corrective action plan to the Project Engineer for review. Include proposed repair locations, limits, and procedures. Repair procedures determined by the Department to be potentially detrimental to the structure or its performance will not be permitted. Do not begin corrective action until submittal acceptance.

805.03.4.1 Precast and Prestressed Concrete: Conform to the"*Manual for Quality Control for Plants and Production of Precast-Prestressed Concrete Products (MNL-116-Latest Edition)* published by the Prestressed Concrete Institute.

805.03.4.2 Cast-in-Place Concrete: Conform to Table 805-02.

Table 805-2
Tolerances for Cast-in-Place Concrete Construction

Description			Tolerance, (Inches)
Camber	Measured from camber line		+1/8, −0
From Plumb	Exposed Surfaces		±3/8
	Concealed Surfaces		±3/4
	Columns		
	In 10 feet of Length		±1/4
	Over Entire Length		±1
Horizontal	Element Centerline Alignment		±1/2
	Centerline of Bearing Riser		±1/8
	Abrupt form offset at Barrier Rail		±1/8
	Location of Openings through Concrete Elements		±1/2
Vertical	Profile Grade Line		±1/2
	Bearing Riser Elevation		±1/8
	Top of Other Concrete Surfaces and Horizontal Grooves		
		Exposed	±3/4
		Concealed	±1
		Location of Concrete Openings	±1/2
Dimensions of Specified Elements	Bridge Deck / Slab Thickness		+1/4, −1/8
	Footings		
		Formed Surfaces	+2, −1/2
		Surfaces Placed against Soil	+3, −1/2
		Thickness	+3, −1
	Other Concrete Elements		+1/2, −1/4
	Concrete Openings		±1/2
From Plane	**Slope of Surfaces In 10 feet:**		
		Watertight Joints	±1/8
		Bridge Decks	±1/4
		Other Exposed Surfaces	±1/2
		Concealed Surfaces	±1
Bearing Riser	Horizontal Dimensions		+1, −1/4

805.03.4.3 Bridge Deck and Approach Slab Ride Quality: This subsection is under development.

Table 805-3
Segment Roughness

This table is reserved.

805.03.5 Steel Stay-in-Place Forms: Conform to the following:

1. Form support angles or straps shall not be welded to steel structural members.
2. Shield steel structural members to prevent weld splatter or arc strikes during form support installation.
3. Use only in interior bays.
4. Dead load deflection shall not exceed L/240 or 3/8 inch.
5. Provide reinforcing chairs which span corrugations and properly support the reinforcing steel.
6. Metal chairs in contact with the metal forms shall be hot-dipped galvanized, electroplated with zinc (GS Grade), epoxy coated, or stainless steel.
7. Repair damage to galvanized surfaces on the metal forms or the visually exposed surfaces of the support angles in accordance with 811.06.6.1.
8. Remove portions of support angles that protrude above the top of the girder flange more than 1/2 inch.
9. Steel stay in place forms shall not be considered part of the girder lateral support system.

805.04 MINIMUM CONCRETE COVER. Measure cover from face of concrete surface to nearest face of reinforcing steel. Provide minimum concrete cover in accordance with the plans or as specified in Table 805-4:

Table 805-4
Concrete Cover Requirements

Location	Minimum Cover (inches)	Tolerance (inches)
Top of deck	2 1/2	+1/4, −1/8
Bottom of deck	1 1/2	
Stirrups and ties	2	
Contact with water	3	
Contact with soil	3	+1/2, −1/4
Drilled shafts	6	−3
Other	2	+1/4, −1/8

805.05 HANDLING AND PLACING CONCRETE.

805.05.1 General: Prior to placing concrete, submit a concrete placement plan to the engineer that will result in sound concrete, in the correct location and conforming to plan dimensions for record.

In preparation for placing concrete, remove all sawdust, chips, and other debris from form interiors. Inspect forms then saturate with water immediately prior to placing concrete.

Strip forms, inspect, and allow substructure concrete to attain compressive strength of at least 4000 psi prior to placement of superstructure loads.

Place concrete without segregating materials and without displacing reinforcement. Discontinue operations if placement methods cause segregation, impede workability, or produce other detrimental effects.

When placing operations involve dropping concrete more than 5 feet, deposit it through a tremie or other accepted means identified in the concrete placement plan.

Consolidate concrete during and immediately after depositing by mechanical vibration, subject to the following provisions:Use internal vibration unless authorization for other methods is obtained or provided herein.

1. Use vibrators capable of transmitting vibrations to concrete at frequencies of at least 4500 impulses per minute.

2. Vibrate with intensity that visibly affects concrete over a diameter of at least 18 inches. Vibrate with sufficient duration and intensity to thoroughly consolidate concrete without causing segregation. Limit vibration at any one point as required to prevent localized areas of grout forming.

3. Provide a sufficient number of vibrators to properly place and consolidate each concrete batch.

4. Manipulate vibrators to thoroughly work concrete around reinforcement and embedded fixtures and into corners and angles of forms. Apply vibration at the point of deposit and in the area of freshly deposited concrete. Insert and withdraw vibrators slowly and vertically to and from the concrete. Apply vibrators at points uniformly spaced and which overlap the visibly affected zones.

5. Do not vibrate directly against reinforcement. Take special care when reinforcement is in sections or layers of concrete which are between initial and final set.

6. Supplement vibration by spading as necessary to ensure smooth surfaces and dense concrete along form surfaces, in corners, and locations inaccessible to vibrators. Provide methods in the concrete placement plan.

7. Reduce the number and size of trapped air cavities (bug holes) in the formed concrete surfaces to minimize finishing.

8. Place concrete in horizontal layers no more than 15 inches thick unless otherwise permitted. Place and consolidate each layer before the preceding layer has achieved initial set to prevent damage to green concrete and avoid planes of separation between lifts.

9. When an emergency results in less than a complete layer being placed in one operation, terminate placement with a temporary vertical bulkhead. Prior to continuing placement, the quality of the initial placement and the location of the construction joint will be evaluated for acceptance. Some remediation may be required. Construction joints are to be in accordance with 805.05.8.

10. During concrete placements, wash and remove any materials that adhere to the surface of adjacent members. Following concrete placement, remove accumulations of mortar splashed on reinforcement steel and forms. Do not mix dried mortar chips and dust in fresh concrete.

11. Protect any installed projection (reinforcement, anchor bolt, etc.) from disturbance between initial and final set of concrete.

805.05.2 Reinforced Concrete Box Culvert: Furnish structures of either cast-in-place concrete or precast concrete units. Install precast units in accordance with Section 701. The maximum joint opening between precast sections is 0.75 inches. Construct each headwall monolithically, unless otherwise specified. Headwall installations include wingwalls and supporting footings in accordance with the plans.

At the time of final acceptance, clean concrete box culverts of debris and soil to the culvert invert.

805.05.2.1 Cast-in-Place: When box culverts are constructed in segments, vertical construction joints shall be perpendicular to the axis of the culvert.

For culverts 4 feet or less in height, walls and top slab may be constructed monolithically. For culverts more than 4 feet in height, walls shall be placed independently from the top slab placement.

805.05.3 Footings, Columns, Walls, Caps, and Girders: Deposit concrete uniformly the full length of the element and bring up evenly in horizontal layers. Place concrete in forms with no standing water. Use monolithic placement unless otherwise specified or allowed by the engineer.

Place concrete between construction joints in a continuous operation. Prior to placing subsequent concrete sections, previously placed sections shall be capable of supporting applied loads.

Concrete supporting formwork shall have attained at least 3000 psi compressive strength prior to placing concrete.

805.05.4 Slab Spans and Girder Decks: Place concrete full depth and full width between vertical bulkheads in one continuous operation for each placement in accordance with the placement sequence specified in the plans. Submit proposed alterations to the specified placement sequence to the Engineer of Record with supporting calculations for review. Review of proposed alterations to the placement sequence will be at no expense to the Department.

Placement shall not induce stresses in previously placed concrete which is between initial and final set.

Use placement rates in accordance with Table 805-5.

Table 805-5
Placement Rates for Slab Spans and Girder Decks

Placement Size (cubic yards)	Minimum Placement Rate (cu yds / hour)
0-50	20
51-75	25
76-125	30
Over 125	40

805.05.4.1 Slab Spans: Anchor void forms to prevent movement during placement of concrete in voided slabs. Forming concrete with soil is not allowed for slab spans.

805.05.4.2 Girder Decks: Provide sufficient supervision, manpower, equipment, tools, and materials to assure proper production,

placement, and finish of concrete for each placement in accordance with minimum placement rates specified in Table 805-5. If minimum placement rate is not achieved, the engineer may reject the placement. Further placement of similar nature and size will not be permitted until corrective measures have been taken to assure that the minimum placement rate can be met.

The contractor is responsible for line and grade control. Verify girder camber prior to constructing risers. Construct riser elevations to accommodate actual girder camber and vertical curvature to maintain cast-in-place deck plan thickness.

805.05.5 End-On-Construction: Use end-on-construction only for slab span bridges, either cast-in-place concrete or precast concrete, when the construction cannot be conducted from the ground or it is impractical to work from the water surface. Provide to the engineer a submittal document requesting permission to use end-on-construction. Include drawings and analysis demonstrating construction loads will not adversely affect members. Construction loads include dead loads, live loads, impact, wind loads, etc. Include details of matting systems, crane specifications, dimensions, lifting loads, and corresponding extension distance from the crane. The drawings and calculations shall be stamped, signed and dated by a professional civil engineer registered in Louisiana.

Do not begin end-on-construction activity until the Department's acceptance of the submittal. Acceptance of the end-on-construction submittal will not relieve the contractor from responsibility for safe and successful completion of the work. Repair all damage to the structure caused by related construction activities at no cost to the Department.

805.05.6 Conveying Concrete: Arrange equipment so that no vibration damages freshly placed concrete. Operate conveyance mechanisms to prevent segregation of concrete. Supply a homogenous stream of concrete.

805.05.7 Depositing Concrete Underwater: When required by the plans or allowed by the engineer, concrete may be placed under water.

Place concrete without segregation and in one continuous placement using a tremie. Refer to 803.05.9 for tremie requirements. Provide a surface as level as possible. A leveling course may be allowed for seal concrete after dewatering subject to design considerations.

Prior to constructing subsequent placements, remove laitance and other unsatisfactory material from the construction joint surface without damaging the concrete.

805.05.8 Construction Joints: Construction joints with reinforcement crossing the plane of the joint shall conform to the following.

Install construction joints only where located on the plans or shown on the placement schedule. Do not install construction joints between levels of mean low water and mean high water. Submit proposed construction joint locations not shown in the plans for review by the Engineer of Record.

Roughen the surface of hardened concrete without leaving loosened particles of aggregate or damaged concrete. Thoroughly clean the roughened surface of foreign matter and laitance immediately prior to placing subsequent concrete.

Allow at least seven days between adjacent placements. Achieve bonding as follows.

805.05.8.1 Neat Cement Slurry: Thoroughly saturate hardened concrete with water and place adequate neat cement slurry at the joint. Place new concrete before the slurry has attained its initial set. Place concrete continuously from joint to joint. Finish joints true to plan line and elevation.

805.05.8.2 Epoxy Resin: Coat vertical concrete surfaces of construction joints prior to each subsequent placement with an accepted epoxy resin conforming to Section 1017. Apply in accordance with the manufacturer's recommendations. A maximum of 2 inches of reinforcing steel may be coated with a thin layer of epoxy at the joint interface.

805.05.9 Water Stops: Place water stops of metal, rubber, or plastic conforming to 1005.07 as shown on the plans. Where joint movement is to be provided, use waterstops of a type permitting such movement without damage. Splice waterstops in conformance with manufacturer's recommendations to form continuous watertight joints.

805.06 CURING. Use wet cure method for all concrete unless specified herein or permitted otherwise. Cure precast concrete in accordance with 805.09.4.

Cure all concrete a minimum of seven curing days. The curing day is defined as 24 hours in which the temperature is above 50°F and if binary or ternary mixes used, 55°F. Colder days may be counted if accepted methods are used to maintain the specified minimum air temperature adjacent to concrete.

Do not permit salt water to come in contact with concrete for at least 30 days.

805.06.1 Wet Cure Method: Wet cure concrete utilizing burlap, combined burlap and white polyethylene, or other acceptable blanket materials. Immediately cover the exposed concrete after finishing with two thicknesses of wet burlap or an approved equivalent. Secure blanket so that it

is in contact with the concrete at all times. After placement, keep the concrete continuously wet for at least 7 curing days.

805.06.2 Membrane Cure Method: For curing concrete in minor drainage structures, bridge substructures, and diaphragms, a membrane curing compound in accordance with 1011.01 may be substituted for wet curing when surfaces do not require a Class 2 or Class 3 finish. When membrane curing is used, cover or shield exposed reinforcing steel and construction joint surfaces to prevent coating with curing compound. Wet cure construction joint surfaces.

Seal concrete surfaces in contact with forms immediately after form removal. Apply curing membrane as soon as surface moisture has evaporated. Method and application rate of curing compound shall be in accordance with the manufacturer's recommendations, but the application rate shall not be less than one gallon per 100 square feet of surface area. Apply the compound in one or two applications. If the compound is applied in two applications, apply the second application no more than 30 minutes after first application.

After final application of curing compound, the surface should have the appearance of a blank white sheet of paper.

If rain falls on newly-coated concrete before the film has dried sufficiently to resist damage, or if the film is damaged, apply a new coat of compound to affected surfaces.

805.06.3 Form Curing Method: Form curing, in which the concrete remains in forms that have not been disturbed, is an acceptable method for formed surfaces. Wet cure or membrane cure unformed surfaces as specified in 805.06.

805.06.4 Deck Curing: Maintain the deck in surface saturated condition using foggers until application of curing compound. Use a membrane cure with a Type 2 curing compound immediately after final texturing as an interim curing measure in accordance with 601.03.10. Exposed reinforcing steel and joints shall be covered or shielded to prevent contact with curing compound. Use wet curing methods when concrete has set sufficiently to support blanketing materials without marring the surface.

Close the deck to all traffic, including vehicles of the contractor, until concrete has been in place and cured for 14 curing days and has attained 4000 psi compressive strength.

805.07 REMOVAL OF FORMS AND FALSEWORK. Remove support forms and falsework without overstressing the concrete and in such a manner as to permit concrete to uniformly and gradually take stresses due to its own

weight. During continued cold weather, when accepted artificial heating methods are not provided, the engineer may permit removal of forms and falsework at the end of a period of calendar days equal to two times the number of curing days specified.

Remove support forms and falsework in accordance with the strength requirements of Table 805-6 and time requirements of Table 805-7.

Remove side forms in accordance with Table 805-6.

Table 805-6
Removal of Support Forms and Falsework
Cast-in-Place and Precast Non-Prestressed Concrete

Concrete Class	Compressive Strength, psi
A1, A2, A3, S	4000
MASS(A1), MASS(A2), MASS(A3)	4000
M	3000
P1, P2, P3 Non-Prestressed	3000

Table 805-7
Forms and Falsework Removal Schedule
Cast-in-Place and Precast Non-Prestressed Concrete

Form and Falsework Location	L = Unsupported Length (ft)	Minimum Time (Curing Days)
Under slabs/decks, diaphragms, beams, caps, footings, etc.	L <10	7
	10 ≤ L ≤ 17	7 + (L−10)
	L > 17	14
Under cantilever portions of slabs/decks	L ≥ 1	7
	L < 1	1
Side forms	N/A	1
Caissons	N/A	1

805.08 CONCRETE SURFACE FINISHES. Classify surface finishes in accordance with table 805-8.

Table 805-8
Concrete Surface Finishes

Class 1	Ordinary Finish
Class 2	Rubbed Finish
Class 3	Special Finish
Class 4	Sandblast Finish
Class 5	Bridge Deck Finish
Class 6	Sidewalk Finish

Give all concrete a Class 1, Ordinary Finish, prior to and in addition to any other type of finish specified.

Give concrete a Class 2, Class 3, or Class 4 finish when specified.

Give bridge deck surfaces a Class 5, Bridge Deck Finish.

Give sidewalk surfaces a Class 6, Sidewalk Finish.

805.08.1 Class 1, Ordinary Finish: Remove fins and irregular projections from all surfaces. Clean and patch cavities produced by form ties, honeycombs, and other holes. Repair broken corners, edges, and other defects. Clean and patch air cavities (bug holes) of depths greater than 1/8 inch.

Cut form ties back at least 1/2 inch as described in 805.03.3. Fittings for metal ties shall be of such design that, upon their removal, cavities left will be of the smallest possible size. Grind fiberglass ties flush with the concrete surface.

Provide surfaces which are sound, true, uniform, and similar in color. For precast concrete, do not clean in a manner that destroys the glazed surface of concrete resulting from the use of metal forms.

Use concrete patch material from the Approved Materials List (AML) meeting the same design requirements as the concrete being patched. Patch material will be mixed, placed, and cured as per the manufacturer's technical data sheet.

Keep construction and expansion joints free of mortar and concrete. Leave joint filler exposed for its full length with clean and true edges.

Strike off exposed surfaces not protected by forms to a true, even surface. Do not use additional mortar to provide a grout finish.

On concrete below the final ground line, removal of fins and projections may be omitted. All other patching will be required.

805.08.2 Class 2, Rubbed Finish: Concrete surfaces to receive a Class 2 finish will be as specified in the plans.

Provide a surface finish that has a uniform smooth texture and color. Fill all holes and voids, including bug holes.

As soon as patching has sufficiently set, thoroughly saturate the exposed concrete surfaces with water and rub with a medium coarse carborundum stone. Continue rubbing until the surface has been ground to a paste, removing all form marks, irregularities, and projections. In this process, do not introduce any additive material other than water.

After rubbing has produced a smooth surface finish of uniform color, carefully brush the material which has been ground to a paste to a uniform texture, and allow it to reset under proper curing conditions. Carefully protect these surfaces from disfigurement and discoloration during subsequent construction operations.

Following stone rubbing and brushing, use a non-shrink epoxy grout to fill any remaining holes to produce a smooth surface of uniform color and texture.

805.08.3 Class 3, Special Finish: Concrete surfaces to receive a Class 3 finish will be as specified in the plans. When the plans call for both Class 2 and Class 3 finishes to be applied to the same surfaces, provide Class 2 finishing prior to Class 3 finishing for those surfaces. For existing concrete surfaces, patch and clean surfaces prior to applying Class 3 finish.

Provide a concrete coating material from the AML. Provide the same product from a single manufacturer for each structure. Apply special finish in accordance with the manufacturer's recommendations.

Provide a uniform color and texture at time of acceptance. Provide color in accordance with the color scheme specified in the plans or otherwise in accordance with 1011.03. Provide to the engineer color and texture samples on materials similar to application for acceptance prior to finishing.

805.08.4 Class 4, Sandblasted Finish: Concrete surfaces to receive a Class 4 finish will be as specified in the plans. After 28 curing days, sandblast the concrete surface with hard, sharp sand to produce an evenly fine grained surface in which mortar has been cut away, leaving aggregate exposed.

805.08.5 Class 5, Bridge Deck Finish:

805.08.5.1 Striking Off: After concrete is placed and consolidated according to 805.05, strike-off bridge decks with mechanical equipment having longitudinal and transverse shearing motion. Roller type screeds are not permitted. Consolidation by vibratory action of the finishing machine is not allowed. Keep a slight excess amount of concrete in front of the cutting

edge of the screed. Carry the excess amount of concrete to the edge of the placement or form and waste.

Mechanically screed the entire length of the bridge deck width with the exception of joint block outs and one foot from gutterlines. Submit for approval other locations requiring hand finishing.

Remove laitance and foreign materials brought to the surface during finishing operations.

Keep the addition of water to the surface of concrete to assist in finishing operations to an absolute minimum. Apply water to assist finishing operations as a fine mist from a pressurized sprayer.

805.08.5.1.1 Longitudinal Screed: Longitudinal screeds are allowed for simple spans bridge decks less than 50 feet in length. For spans between 30 and 50 feet in length, the screeds must be mechanically operated. Adjust the screed cutting edge to conform to the roadway profile. Strike-off bridge decks with a screed parallel to the centerline of roadway, resting on bulkheads or screed strips cut or set to required roadway cross-section.

805.08.5.1.2 Transverse Screed: Provide a transverse screed for simple spans 50 feet or greater in length and for continuous spans. Provide mechanical finishing machines that are power driven, traveling on rails set to achieve specified profile and screeds set to the cross-section. Perform a dry run to check header placement, deck thickness, and reinforcing steel cover.

805.08.5.2 Straightedging: After striking off, check the surface with an approved 10-foot metal static straightedge operated parallel to the centerline of the bridge. The surface shall show no deviation in excess of 1/8 inch from the testing edge of the straightedge. Correct deviations in excess of this requirement before final finishing. The checking operation shall progress by overlapping the straightedge at least one-half the length of the preceding pass. Correct major deviations by strike-off. Use the straightedge to correct minor deviations and as a checking device.

805.08.5.3 Final Texturing: After surface irregularities have been removed and a satisfactorily smooth surface obtained, give the concrete a uniformly textured final surface finish by use of a metal tine texturing device conforming to 601.03.1.13. Provide required texture by using either a mechanical or manual operation to propel metal tines. Provide grooves conforming to 601.03.9.8.

Grooves shall be transverse to the centerline of roadway and shall extend to within 1 foot of the gutter line. If grooves are applied too deep, micromilling or diamond grinding of the surface and re-grooving will be required at no additional cost to the Department.

Maintain the deck in surface saturated condition using foggers until application of curing compound.

805.08.6 Class 6, Sidewalk Finish: After concrete has been placed, consolidate and strike off the surface by means of a strike board and float. Use an edging tool on edges and at joints. Do not vary the surface by more than 1/8 inch under a 10-foot metal static straightedge. Provide the surface with a granular or matte texture.

805.09 PRECAST CONCRETE. Comply with 801.05. Provide shop drawings for precast concrete.

Provide a technician skilled in the specified precast systems that shall supervise the work and provide assistance to the engineer as necessary.

Furnish a concrete cylinder compression testing machine with a minimum 250,000 pound capacity complying with ASTM C39 along with all other necessary supplies and equipment. Furnish a surface resistivity meter conforming to DOTD TR 233. Furnish suitable testing facilities for use of this equipment. Calibrate equipment utilizing an accepted calibration service prior to initial use and at one year intervals thereafter. Recalibrate the equipment if it appears to be giving erratic results during use.

Hot weather concrete limitations as stipulated in 901.11.2 shall not be applicable for steam curing; however, precautions such as cooling of forms will be required.

805.09.1 Supervision and Inspection: The Department will inspect all precast concrete members.

Shop drawings in accordance with 801.05 shall be in the possession of the plant inspector at least two days prior to beginning fabrication. Provide access to all engaged parts of the plant during fabrication. Keep areas requiring inspection free of debris.

The fabrication, construction, and dimensional tolerances of prestressed members shall conform to the limits specified in the *Manual for Quality Control for Plants and Production of Precast-Prestressed Concrete Products (MNL-116-Latest Edition),* published by the Prestressed Concrete Institute, unless otherwise specified herein.

Furnish an office with at least 140 square feet of floor space for the Department personnel to perform necessary work. Provide additional office space as deemed necessary by the engineer. This office shall contain a desk, chair, and file cabinet with lock, telephone with dedicated line, electric lights, power outlets, high speed internet connection, shelves, and tables in the quantity required by the engineer. Provide the office with adequate heating,

ventilation, air conditioning, and convenient sanitary facilities with running water. Fabricator shall be responsible for paying all utility bills. This office shall be in good condition, located where there is not excessive noise with reasonable access to the fabrication area, and restricted for use by Department's inspectors only. Provide convenient and adequate reserved parking space.

805.09.2 Forms: Forms shall be in accordance with 805.03 as amended by this section.

Use steel forms. Seal bolted joints or seams to minimize seepage. For exterior girders, space bolted form joints to have no more than two bolted joints or seams per member.

Prior to placement of concrete and reinforcing steel, thoroughly clean forms and uniformly coat inside form surfaces with a form release agent from the AML. Maintain form surfaces clean and free from concrete build-up.

Prevent flash setting. Cool forms as required.

805.09.3 Handling and Placing Concrete: Handle and place concrete in accordance with 805.05 and Section 901, and as amended herein.

Do not deposit concrete in forms until the engineer has inspected reinforcement, conduits, anchorages, cleanliness of forms, and prestressing strands and given acceptance. Vibrate concrete to achieve consolidation. In addition to internal vibration, external vibration may be applied. Vibrate without displacement or excessive vibration of reinforcing, conduits, or strands.

At the time of initial set, rough float tops of prestressed beams by scrubbing transversely with a coarse wire brush to remove laitance and produce a roughened surface for future bonding. Roughen to average amplitude of 3/8 inch ± 1/8 inch.

805.09.4 Curing: Cure concrete in accordance with 805.06, Section 901, and as amended by this section.

Cure precast members for three curing days using steam method, wet method, or a combination of the two.

Furnish and install two recording thermometers reporting time-temperature relationship for each 200 feet of bed.

Use thermocouple cure for all Class P2 and P3 concrete or when specified in the contract.

805.09.4.1 Steam Cure Method: Contain steam under a suitable enclosure to minimize losses of moisture and heat. Allow initial set of concrete to take place prior to applying steam. Steam shall be at 100 percent relative humidity. Do not apply steam directly on concrete. During

application of steam, increase ambient air temperature at a rate not to exceed 40°F per hour until a uniform temperature not exceeding 160°F is reached. Continue steam curing at this temperature and maintain 100 percent relative humidity until concrete reaches release strength. At this time, steam curing may be discontinued in accordance with detensioning requirements.

805.09.4.2 Wet Cure Method: Wet cure in accordance with 805.06, as amended by 805.09.4.3.

805.09.4.3 Combined Steam and Wet Cure Method: Steam and wet cure methods may be used in combination to obtain the three curing days. Submit the procedure for transitioning from steam to wet cure to the Department for review and concurrence. Minimize the transition time.

805.09.4.4 Membrane Cure Method: Use as an interim short term curing method for plastic concrete. Steam or wet cure method shall be used once the concrete has set sufficiently to prevent marring the surface.

Maintain a surface saturated condition using foggers until application of the curing compound. Spray uniformly with a dissipating curing compound immediately after final finishing or texturing in accordance with 601.03.10. Exposed reinforcing steel and joints shall be covered or shielded to prevent contact with curing compound.

805.09.5 Finishing: After removal from forms and completion of curing, perform required repairs, finishing, and post-pour checks prior to storing members. Finish in accordance with 805.08.1. Repair minor defects with concrete patch materials from the AML.

805.09.6 Storage and Transportation: Prevent damage during storage, handling, and transportation of members. Replace damaged units.

Maintain girders in an upright position. Support girders within three feet of the end of the girder, unless otherwise specified. Support piles at lifting locations.

Upon detensioning, prestressed members may be moved to other locations in the fabrication yard for storage and curing.

Hold non-prestressed members at the plant after casting until concrete has attained the specified 28-day compressive strength and minimum cure time.

Hold prestressed members at the plant after casting until concrete has attained the specified 28-day compressive strength, and no less than 14 days for prestressed piles. Prestressed girders can be transported any time after reaching the specified 28-day compressive strength.

805.09.7 Prestressed Concrete:

805.09.7.1 Stressing Strand: Provide stressing strand in accordance with Section 1009.

Cut off ends of strands and coat with a low permeability epoxy paste and coat with a suitable asphalt material in accordance with the plans.

Provide load elongation curves showing elongation in inches per inch, and inches per 10 feet, from 0 to 80 percent of the minimum ultimate tensile strength.

Use the same strand type for similar members. Do not use strands that have been stressed.

805.09.7.2 Debond Sheathing: Provide sheathing with sufficient rigidity to prevent bonding of the pre-stressing strand and concrete. Sheathing shall have an inside diameter equal to the nominal strand diameter plus 1/8 inch and a wall thickness as thin as possible and sufficient to obtain the above requirements. Tape the joints between segments of sheathing to prevent leakage of concrete into the sheathing. Split sheathing will not be allowed.

805.09.7.3 Strand Tensioning Requirements

Prior to use in fabrication, calibrate jacks with their gauges using an approved independent calibration service. Provide a calibration certificate to the DOTD Construction Section. Recalibrate if a jack or gauge appears to be giving erratic results or if gauge pressure and elongations do not correlate.

Several members may be cast in a continuous line and stressed at one time. Leave sufficient space between ends of members to permit access for cutting strands after concrete has attained required strength. Leave sufficient free strand between concrete members to prevent member cracking during curing and detensioning.

Tension strands with calibrated equipment. If hydraulic jacks are used, equip them with gauges with graduations of 100 pounds and accurate within 2 percent of the specified force shown on the plans. Provide means for measuring elongation to the nearest 1/8 inch ± 1/16 inch.

Bring strands to a uniform initial tension shown on the shop drawing or agreed to with DOTD fabrication supervisor but at least 2,000 pounds prior to full tensioning. Measure this initial tension by gauge reading or other accepted means.

For final strand tensioning, measure strand force by elongation and then verify by gauge reading.

Provide elongation and tension force calculations to account for all losses (chuck seating, abutment rotation, full bed shortening, etc.) to achieve the specified force shown on the plans. Keep a record of strand elongation and jacking force for each strand.

A gauge reading jacking force greater than 5 percent of calculated force required based on elongation will initiate an investigation and corrective

action. In case of a discrepancy, place the error on the side of a slight overstress. Limit gauge reading jacking force to a temporary strand stress of no more than 81 percent of the specified strand tensile strength.

Detension each strand in accordance with the sequence shown on the shop drawings.

805.09.7.4 Strength Requirements: Make a minimum of seven test cylinders for Department use for acceptance testing. Make additional cylinders for quality control.

Cure cylinders using either match cure or thermocouple control cure (TCC) as required below.

Prior to detensioning, ensure that the least mature concrete placed in the member has reached the required release strength.

After 28 days, the Department will test two cylinders for acceptance. Both 28-day concrete cylinders must attain the minimum required strength or members involved are subject to rejection.

If all cylinders have been tested and concrete has not attained final required strength, acceptance will be made in accordance with the Department's manual titled *Application of Quality Assurance Specifications for Precast-Prestressed Concrete Plants.*

Place recording thermometers as follows: For girders, locate one thermometer at the center of gravity of the top flange and one at the center of gravity of the bottom flange. For piles, locate the thermometer midway between an outside corner of the pile and nearest edge of the center void. If a void is not provided, provide one thermometer at the center of gravity of the cross-section.

805.09.7.4.1 Match Cure: Cure cylinders in the same external curing environment as the member.

805.09.7.4.2 Thermocouple Control Cure (TCC) Cure cylinders in a calibrated device which mimics the internal temperature of the member. Furnish the necessary controls and equipment for maintaining cylinder temperature equal to the temperature in the precast concrete member.

Device shall provide a permanent graphical record of time versus temperature, rate of temperature change, and maximum and minimum temperatures. Use a maximum time interval of 15 minutes for graph.

805.09.7.5 Form Removal and Detensioning: Remove side forms once concrete has reached the specified release compressive strength. Detension strands after removal of side forms.

Detension strands before the internal concrete temperature has decreased to 20°F less than its highest peak temperature. Adding heat will be permitted to maintain the internal concrete temperature within the required range.

Detension strands such that lateral eccentricity of prestress will be a minimum in accordance with approved shop drawings.

805.09.8 Post-Tensioned Concrete: Post-tension in accordance with the plans, latest editions of the *AASHTO LRFD Design Specifications* and the *AASHTO Guide Specifications for Design and Construction of Segmental Concrete Bridges.*

805.09.8.1 Bonded Reinforcement: Provide post-tensioning steel bar/strand reinforcement to be bonded which is free of dirt, loose rust, grease, or other deleterious substances. Blow out ducts with compressed air until no water comes through the duct. Install reinforcement in ducts which are free of water, dirt, or other foreign substances. Stress reinforcement, grout ducts, and once grout has cured and reached the required strength, transfer post-tensioned forces to member.

805.09.8.2 Non-Bonded Reinforcement: Install post-tensioning steel bar/strand in flexible ducts cast in the member. After tensioning, grout the ducts to provide corrosion protection.

For members with draped strands, an open tap at low and high points of the duct may be necessary.

805.09.8.3 Grouting: Use grout conforming to ASTM C1107 and install using the latest edition of *AASHTO LRFD Design Specifications, AASHTO LRFD Construction Specifications,* and the *AASHTO Guide Specifications for Design and Construction of Segmental Concrete Bridges.*

Mold and cure grout cubes with the member and attain a compressive strength of at least 3000 psi prior to transfer of bond stress or end anchor release. Prepare and test grout cubes in accordance with ASTM C109.

805.10 MEASUREMENT. Quantities will be the design quantities as shown on the plans.

805.10.1 Structural Concrete: Quantities for structural concrete are computed from plan dimensions per cubic yard. The measured volume is the gross volume reduced by the volume displaced by chamfers with leg dimensions greater than 1.5 inches, expansion joint components and pile

embedments. Volumes deducted for embedded timber piling are based on 12 inches butt diameter and nominal dimensions for other pile types.

805.10.2 Concrete Surface Finish: Quantities for Class 2 Rubbed Finish, Class 3 Special Finish, and Class 4 Sandblast Finish will be measured per square foot.

Other concrete surface finishes will not be measured for payment.

805.10.3 Bridge Superstructure and Substructure: Quantities for bridge superstructure and substructure will be measured per square foot. Quantities will be based on the clear roadway width measured from gutter line to gutter line multiplied by the length of bridge measured from abutment joint to abutment joint.

805.10.4 Reinforced Concrete Box Culverts: Quantities for reinforced concrete box culverts of each size and type will be measured in place by the linear foot along the flow line between inside faces of the headwalls. For multiple barrel structures, the measured length will be the sum of the lengths of all barrels measured as described above.

Quantities for reinforced concrete box culvert headwalls will be measured per each. The quantity represents the headwall installation on one end of the box culvert regardless of the number of barrels.

805.11 PAYMENT.

805.11.1 Structural Concrete: Payment for structural concrete will be made at the contract unit price per cubic yard, adjusted in accordance with the following provisions.

Class A1, A2, A3, MASS(A1), MASS(A2), MASS(A3) and S concrete will be accepted on lot basis. Consider a lot to be an identifiable placement not exceeding 200 cubic yards of concrete. A placement of 200 to 400 cubic yards will be divided into two identifiable lots as equal in size as possible. A placement exceeding 400 cubic yards will be represented by three lots.

As a minimum, two random batches will be sampled for each lot, and three cylinders will be molded from each batch sampled. The cylinders will be tested for compressive strength in 28 to 31 calendar days. In the event of sudden cessation of operation, a minimum of three cylinders will constitute a lot.

Sampling, testing, acceptance, and payment will be in accordance with Section 901.

Formwork, falsework, bracing, concrete handling, placing, finishing and curing, and expansion joint fillers will not be measured for payment.

805.11.2 Concrete Surface Finishes: Payment for completed and accepted Class 2 Rubbed Finish, Class 3 Special Finish, and Class 4 Sandblast Finish will be made at the contract unit price per square foot which includes all materials, labor, equipment, and tools necessary to complete the item. Unless specified otherwise, payment for other concrete surface finishes will be included in the payment for the concrete receiving the corresponding finish.

805.11.3 Precast-Prestressed Girders: Payment will be at the contract unit price per linear foot which includes all work and appurtenances necessary for fabrication, storage, handling, transporting, and installation in accordance with the plans and shop drawings.

Miscellaneous steel and hardware not embedded in the girder are paid for as provided in Section 807. Bearings will be paid for as provided in Section 814.

805.11.4 Bridge Superstructure and Substructure: Payment will be made at the contract unit price per square foot, which includes the entire superstructure with railings and the portion of the substructure above the bottom of caps.

Cast-in-place concrete is subject to 805.11.1 and pay adjustments made in accordance with Table 901-4.

805.11.5 Reinforced Concrete Box Culverts: Payment for reinforced concrete box culverts will be made at the contract unit price per linear foot, which includes connections to existing structures, concrete, reinforcing steel, excavation, backfill, and all other items of material, labor, and equipment necessary to complete the work in accordance with the Contract.

Payment for reinforced concrete box culvert headwalls will be made at the contract unit price per each headwall which includes connections to existing structures, concrete, reinforcing steel, joint materials, excavation, backfill, and all other items of material, labor, and equipment necessary to complete the work in accordance with the Contract.

Cast-in-place concrete is subject to 805.11.1 and pay adjustments made in accordance with Table 901-4. Acceptance for each precast reinforced concrete box culvert will be in accordance with the latest version of ASTM C1577.

Payment will be made under:

Item No.	Pay Item	Pay Unit
805-01	Class A1 Concrete (Type)	Cubic Yard
805-02	Class A2 Concrete (Type)	Cubic Yard
805-03	Class A3 Concrete (Type)	Cubic Yard
805-04	Class MASS (A1) Concrete (Type)	Cubic Yard
805-05	Class MASS (A2) Concrete (Type)	Cubic Yard
805-06	Class MASS (A3) Concrete (Type)	Cubic Yard
805-07	Class S Concrete	Cubic Yard
805-08	Precast-Prestressed Concrete Girders (Type)	Linear Foot
805-09	Precast Concrete Members	Linear Foot
805-10	Precast Concrete Members	Square Foot
805-11	Precast Concrete Members	Each
805-12	Bridge Superstructure and Substructure (Type)	Square Foot
805-13	Reinforced Concrete Box Culverts (Cast-in-Place or Precast)(Size)	Linear Foot
805-14	Reinforced Concrete Box Culverts (Cast-in-Place)(Size)	Linear Foot
805-15	Reinforced Concrete Box Culverts (Precast)(Size)	Linear Foot
805-16	Reinforced Concrete Box Culverts (Extension)(Size)	Linear Foot
805-17	Reinforced Concrete Box Culvert Headwall	Each
805-18	Concrete Finish (Class)	Square Foot

Section 806
Deformed Reinforcing Steel

806.01 DESCRIPTION. Furnish and place reinforcing steel for reinforced concrete structures.

806.02 MATERIALS. Comply with Section 1009. Use accessories compatible with the reinforcement.

806.03 FABRICATION. Fabricate reinforcement to the shapes shown on the plans.

806.03.1 Bending: Cold bend reinforcement unless otherwise permitted. Do not rebend bars. Special fabrication will be required for bending No. 14 and 18 bars more than 90 degrees.

Bend bars around a pin having a diameter as specified in Table 806-1, unless otherwise specified:

Table 806-1
Pins for Bar Bends

Bar Size and Use	Minimum Pin Diameter
Nos. 3 through 5 – General	6.0 d_b
Nos. 3 through 5 – Stirrups and Ties	4.0 d_b
Nos. 6 through 8 – General	6.0 d_b
Nos. 9, 10 and 11	8.0 d_b
Nos. 14 and 18	10.0 d_b
	d_b=bar diameter

806.03.2 Tolerances: Fabricate bars in accordance with the tolerances specified in Table 806-2. All dimensions given in Table 806-2 are out-to-out of bars.

Table 806-2
Fabrication Tolerances

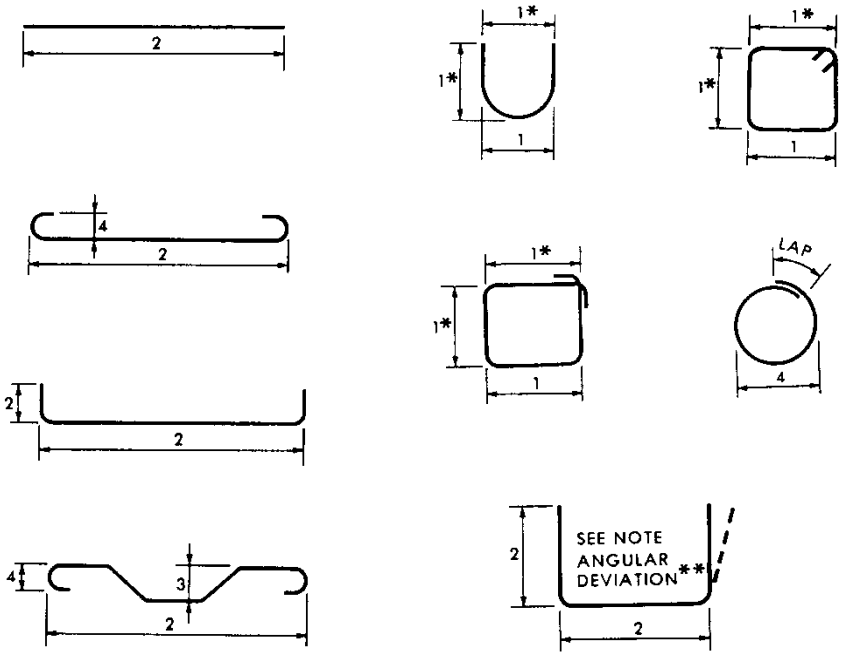

Symbol	Tolerance (inches)
1	± 1/2
2	± 1
3	+ 0, -1/2
4	± 1/2

*Not to differ for opposite parallel dimension by more than 1/2 inch.
**Angular Deviation-Maximum ± 2 1/2° or ± 1/2 inch/ft., but no less than 1/2 inch.

806.03.3 Shipping: Ship in standard bundles, tagged, and marked in accordance with the *Manual of Standard Practice of the Concrete Reinforcement Steel Institute* (CRSI). Make tags of durable material and legibly mark with waterproof markings. Attach at least one tag per bundle by wire. Show size of reinforcing, number of pieces, mark and length of bars on tags.

806.03.4 Handling and Coating Repairs: Handle reinforcing steel without damaging the reinforcing steel or coatings. Repair coatings to bars damaged or cut during field operations before rusting occurs in accordance with the manufacturer's recommendations.

806.04 MATERIAL STORAGE. Store reinforcing steel above ground on platforms, skids, or other supports to protect from damage and keep clean. At time of concrete placement, reinforcing steel shall be clean and damage free.

806.05 PLACING AND FASTENING. Provide reinforcing steel in the position shown on the plans. Support reinforcing steel during placing and setting of forms and concrete. Additional bracing may be required to handle reinforcing cages to prevent damage. Additional bracing may be required to support and stabilize reinforcing cages to prevent damage or collapse.

When placed in the work, reinforcement shall be free from dirt, loose rust, loose scale, paint, oil, grease, form release agent, or other foreign material. Thin powdery rust and light rust need not be removed. Do not field bend reinforcing steel unless specified on the plans or permitted by the engineer. Do not cut bars by burning.

Tie reinforcing steel with wire adequate to support the construction loads including erection of reinforcing steel cages and placement of concrete. In no case use less than a No. 16 gauge wire. Tie reinforcing steel at all intersections. When bar spacing is less than 1 foot in each direction tie alternate intersections, except for drilled shafts which require all intersections of vertical and horizontal bars to be tied.

Maintain distance of reinforcement from forms by use of metal chairs, ties, hangers, or other approved supports. Do not use pebbles, pieces of broken stone or brick, metal pipe, and wooden blocks as bar supports. Precast concrete blocks may be used when approved by the engineer in applications where concrete is to be placed against soil. When allowed, use concrete blocks meeting the requirements of the concrete placement.

Repair damaged coatings on bar supports (chairs) and accessories in accordance with manufacturer’s recommendations before rusting occurs.

806.06 SPLICING. Furnish reinforcement bars un-spliced to the full lengths indicated on the plans. Do not splice bars, except as indicated in the plans, without approval of the Engineer of Record. Maintain the minimum required clear distance to other bars and the specified concrete cover. Minimum required clear distance is three times the maximum aggregate size.

806.06.1 Lap Splices: Unless otherwise specified, provide lap splices in accordance with the requirements of Table 806-3. Do not place a construction joint within the limits of the lap splice. In lapped splices, place bars in contact and tie together. Stagger splices by at least one lap splice length when locations are not shown in the plans.

806.06.2 Mechanical Splices: When shown in the plans, make reinforcing steel splices with a mechanical splice listed in the AML and used in accordance with the manufacturer's recommendations. The mechanical splice shall develop in tension or compression, as required, at least 125 percent of the specified yield strength of the bars being spliced. Stagger mechanical splices to maintain proper minimum clear distances between bars and mechanical devices.

806.06.3 Welded Splices: Use welded splices only if detailed on the plans or if authorized by the Engineer of Record. Welding shall comply with Section 809. Stagger splices as far as possible. Do not use welded splices on coated reinforcing steel.

Table 806-3
Lap Splice Length for Grade 60 Steel

Bar No.	Lap Splice Length (inches)
3	46
4	61
5	77
6	92
7	107
8	122
9	138
10	155
11	172

806.07 MEASUREMENT. Quantities of deformed reinforcing steel will be the design quantities as specified on the plans. Design quantities are based on theoretical weights in accordance with ASTM A615 as shown in Table 806-4:

Table 806-4
Reinforcing Bar Weights

Bar No.	Weight Lb/Lin Ft
3	0.376
4	0.668
5	1.043
6	1.502
7	2.044
8	2.670
9	3.400
10	4.303
11	5.313
14	7.650
18	13.600

Measurement and payment of structural shapes used as reinforcement will be made in accordance with Section 807 Structural Metals on a lump sum basis.

Measurement and payment of mechanical splices will be based per each.

The following will not be measured for payment:

1. Reinforcement furnished for testing purposes.
2. Additional reinforcement used for laps in splices other than those shown on the plans.
3. Mechanical splices not shown on the plans.
4. Welded Splices.
5. Additional weight of reinforcement used at the contractor's request as substitutions for reinforcement shown on the plans.
6. Additional weight of reinforcement used for bracing and additional support.
7. Spacers, clips, bar supports (chairs), and other material used in installing reinforcement.
8. Additional weight of coating or cleaning and coating repair.

806.08 PAYMENT. Payment for reinforcing steel will include all labor, materials, testing, and equipment required to complete the accepted item.

Payment will be made at the contract unit price under:

Item No.	Pay Item	Pay Unit
806-01	Deformed Reinforcing Steel	Pound
806-02	Deformed Reinforcing Steel (Corrosion Resistant) (Type)	Pound
806-03	Deformed Reinforcing Steel Mechanical Splice	Each

Section 807
Structural Metals

807.01 DESCRIPTION. Fabricate, transport, and install structural metals.

807.02 MATERIALS. Conform to section 1013 except as amended herein.

ASTM A325 and A490 have been replaced by ASTM F3125. References to A325 and A490 are to be taken to mean ASTM F3125, Grade A325 and A490 respectively.

Provide AASHTO M270, Grade 50 steel, unless specified otherwise.

Provide high-strength ASTM A325 Type 1 mechanically galvanized fastener assemblies. Do not galvanize ASTM A490 bolts. Use high-strength Type 3 fastener assemblies with weathering steel.

Provide stainless steel anchor bolts, nuts and washers. Comply with 1013.08.4. When galvanized anchor bolts, nuts and washers are specified, hot dip galvanize in accordance with 811.08.1 and ASTM F2329.

807.03 SUBMITTALS. Comply with Section 801. Furnish working drawings in accordance with 801.05.

807.04 FABRICATION REQUIREMENTS.

807.04.1 Handling and Storing Materials: Store materials, plain or fabricated, at the shop and project site above ground on platforms, skids, or other supports. Keep materials free from dirt, grease, and other foreign matter and protect from corrosion.

Place and store girders and beams in the upright position. Support long members, such as columns and chords, on skids placed near enough together to prevent damage from deflection.

807.04.2 Shop Requirements: Use a fabrication shop possessing current AISC Structural Steel, AISC Component, and other certifications as required for the bridge elements being fabricated and type of work specified in the Contract. Provide the Chief Construction Engineer with documentation of all current fabricator certifications prior to beginning fabrication. Perform fabrication work requiring Departmental inspection at a location within the continental United States. Alternate certifications that exceed the requirements herein may be submitted to the Chief Construction Engineer for acceptance.

Provide sufficient lifting capacity, work space, and equipment to fabricate the required members. The cranes in each working area shall have a

combined rated capacity equal to the lifting weight of the heaviest assembly fabricated for shipment unless acceptable alternate lifting and turning facilities are provided. Provide lifting methods which prevent damage or overstress to the material.

Fabricate all elements in shops protected from adverse weather. The Fabrication Engineer may allow limited fabrication and welding outside the shop. Outside assembly of field connections may be allowed with prior approval.

Supply the Fabrication Engineer an office of at least 140 square foot floor space. Provide additional office space as deemed necessary by the engineer. This office shall contain a desk, chair, file cabinet with lock, telephone with dedicated line, electric lights, power outlets, high speed internet connection, shelves, and tables in the quantity required by the engineer. Provide the office with adequate heating, ventilation, air conditioning, and convenient sanitary facilities with running water. Fabricator shall be responsible for paying all utility bills. This office shall be in good condition, located where there is not excessive noise, and restricted for use by Department's inspectors only. Provide convenient and adequate reserved parking space.

807.04.3 Inspection: Inspection may be conducted before, during, and after fabrication. Materials and workmanship which are in the process of being fabricated and found to contain defects or have been subjected to damaging fabrication procedures will be rejected while still in process. The inspector has the right to require testing of materials and/or workmanship, even if materials and/or workmanship are in excess of code requirements.

If defects in materials or workmanship are found by additional testing required by the inspector, the additional test will be at no additional cost to the Department. If no defects are found, the Department will compensate the contractor for the additional testing.

Furnish equipment, certified technicians, and required materials for all required testing of materials and workmanship.

807.04.3.1 Mill Inspection: Structural metals will be inspected as deemed necessary by the engineer. Prior to fabrication, submit for review to the Chief Construction Engineer two copies of Material Test Reports and a notarized "Fabricator's Material Statement and Certificate of Compliance" which verifies compliance and traceability. When appropriate, a Buy America statement shall be included on the "Fabricator's Material Statement and Certificate of Compliance."

807.04.3.2 Shop Inspection: Provide the engineer free and safe access at all times to all portions of shops where work is being done. Present

a schedule of fabrication including shop location and contact information to the Chief Construction Engineer at least 30 days in advance of commencing work. Maintain an updated 30-day look ahead schedule.

Provide a Quality Assurance Program which ensures the products conform to the requirements of the contract and all applicable codes. Provide inspectors meeting the requirements specified in the latest edition of ANSI/AASHTO/AWS D1.5 as appropriate. The fabricator's inspection shall be an independent and separate function from all other functions.

The Department retains the right to exercise oversight and require changes to the contractor's Quality Assurance Program. The Department retains the right to inspect all fabrication, pre-assembly, castings, and other metal items. The Department's inspection does not relieve the contractor of responsibility to perform Quality Control.

807.04.3.3 Field Inspection: Structural metals will be inspected as deemed necessary by the engineer to verify conformance with the plans, specifications, and working drawings. Fabricated members having field work performed that does not conform to the plans, specifications, or previously reviewed and accepted working drawings will be subject to rejection.

807.04.4 Marking: Provide temporary markings on each member piece to provide material traceability throughout fabrication. When galvanizing is specified, use a felt tip paint marker that will not be visible through or bleed through galvanizing coating.

Provide permanent piece markings immediately upon start of fabrication at one location for each member. Accomplish steel die stamping with low-stress steel stamps having a minimum face character radius of 0.010 inch and a maximum impression depth of 0.010 inch. Impressions shall not be placed within 1 inch of plate edge.

In case of doubt as to the grade of metal being used, samples will be taken and tested as directed by the Department's inspector.

807.04.5 Straightening, Cambering, and Curving Materials and Members:

807.04.5.1 Straightening Material: Prior to fabrication, rolled material shall be straight. If straightening is necessary, permission from the Fabrication Engineer is required.

Sharp kinks and bends will be cause for rejection of the material.

Heat straighten AASHTO M270, Grades HPS 70W and HPS 100W steels under rigidly controlled procedures. Each application requires permission from the Fabrication Engineer. Do not allow the maximum temperature of the

steel to exceed 1100°F. If using normalizing, complete straightening of steel plates before normalizing operations begin for tension member material.

For all other steels with specified yield points less than 70,000 psi, the temperature of heating area shall not exceed 1200°F as controlled by pyrometers or temperature-indicating crayons.

807.04.5.2 Straightening of Members: Do not use artificial cooling method unless permitted by the Fabrication Engineer.

807.04.5.3 Camber for Welded Plate Girders and Rolled Beams: Camber members before heat curving.

Camber welded plate girders by cutting camber into webs.

Camber rolled beams using either heat methods or cold bending methods. Submit methods and procedures to the Fabrication Engineer for review. Show accepted details and procedures on submitted shop drawings. When using heat, the temperature of heating area shall not exceed 1100°F as controlled by pyrometers or temperature-indicating crayons. After cambering, allow the beam to air cool. Do not quench.

Camber members in accordance with the plans.

807.04.5.4 Curving Welded Plate Girders and Rolled Beams:

807.04.5.4.1 Materials: Do not heat curve steels that are manufactured to a specified yield point greater than 70,000 psi. Heat curving will not be permitted for those portions of girders where span base line radius of curvature is 200 feet or less.

807.04.5.4.2 Type of Heating: Beams and girders may be curved by either continuous or V-type heating, as permitted by the Fabrication Engineer and shall be in accordance with the latest version of the *AASHTO LRFD Bridge Construction Specifications*.

807.04.6 Finish: Neatly finish all edges in accordance with the latest version of the *AASHTO LRFD Bridge Construction Specifications*. Neat finish is defined as a surface without irregularities such as burrs, sharp edges, slag, and voids.

807.04.6.1 Facing of Bearing Surfaces: The surface finish of bearings, base plates, and other bearing surfaces that are to come in contact with each other or with concrete shall comply with the surface finish of Table 807-1 and ANSI B 46.1, Surface Roughness, Waviness, and Lay, Part 1.

Table 807-1
Bearing Surface Finish

Surface	Surface Finish, μ in
Steel slabs	2000
Heavy plates in contact in shoes to be welded	1000
Milled ends of compression members, milled or ground ends of stiffeners and fillers	500
Bridge rollers and rockers	250
Pins and pin holes	125
Sliding bearings	125
All other surfaces	500

807.04.6.2 Abutting Joints: Abutting joints in compression members, girder flanges, and tension members shall be faced and brought to an even bearing when specified. When joints are not faced, the opening shall not exceed 1/4 inch.

807.04.7 Bolt Holes: Provide bolt holes with dimensions conforming to Table 807-2.

Drill holes full-size, or subsize, and ream holes. Subsize holes by subdrilling or subpunching. Thermal forming of holes will not be permitted.

After holes are finalized, remove burrs and shavings. The member shall be free from twists, bends, and other deformation. Submit proposed repair procedures to the Fabrication Engineer for review. Initiate repairs upon acceptance of submitted repair procedure.

807.04.7.1 Forming Holes: Provide standard holes and oversize holes that are cylindrical and perpendicular to the component. Provide slotted hole edges that are perpendicular to the component.

In material composed of five or less plates and having a total thickness of 5/8 inch or less, form holes by drilling full-size, or subsizing and reaming.

In material composed of more than five plates or having a total thickness of greater than 5/8 inch, form holes by subsizing and reaming, or drill full-size while components are assembled and held in proper position.

In milled-to-bear connections, assemble connection components and hold in proper bearing position while either reaming subsize holes to full-size or drilling full-size holes.

In connections which are not milled-to-bear, use any of the following methods to finalize holes:

1. Assemble connection components and hold in proper position while either reaming subsize holes to full-size or drilling full-size holes.

2. Use a secured steel template to drill full-size holes.

3. Use numerically-controlled drilling to drill full-size holes.

Connection plates and splice plates may be used as templates for one time use. Use bushings in templates for multiple use.

Provide subsize holes having a diameter 3/16 inch smaller than the nominal bolt diameter. Diameter of the die shall not exceed diameter of the punch by more than 1/16 inch. Provide clean cut holes without leaving torn or ragged edges.

807.04.7.2 Use of Oversize and Slotted Holes: When specified or approved, oversize, short-slotted, and long-slotted holes may be used with high strength bolts having a nominal diameter of 5/8 inch and larger except as follows:

1. Oversize holes may be used in all plies of friction-type connections. Hardened washers shall be installed over exposed oversize holes.

2. Short-slotted holes may be used in all plies of friction-type or bearing-type connections. In friction-type connections, short-slotted holes may be oriented without regard to direction of loading. In bearing-type connections, the long dimension of short-slotted holes shall be transverse to the direction of loading. Install hardened washers over exposed short-slotted holes.

3. Long-slotted holes may be used in only one of the connected parts of either a friction-type or bearing-type connection at an individual faying surface. In friction-type connections, long-slotted holes may be oriented without regard to direction of loading. In bearing-type connections, the long dimension of the long-slotted holes shall be transverse to the direction of loading.

4. Install structural plate washers or continuous bars not less than 5/16 inch thick over long slots that are in the outer plies of joints. These washers or bars shall have a size sufficient to completely cover the slot after installation. If requiring hardened washers, place them over the plate washers or bars.

5. When oversize or slotted holes are used, the distances between edges of adjacent holes or edges of holes and edges of members shall not be less than that permitted with standard size holes.

Table 807-2
Bolt Hole Dimensions

Bolt Diameter, d (inch)	Standard Hole Diameter (inch)	Oversize Hole Dimension (inch)	Short-Slotted Hole Dimensions		Long-Slotted Hole Dimensions	
			Width (inch)	Length (inch)	Width (inch)	Length (inch)
$^{1}/_{2}$	$^{9}/_{16}$	N/A	N/A	N/A	N/A	N/A
$^{5}/_{8}$	$^{11}/_{16}$	$^{13}/_{16}$	$^{11}/_{16}$	$^{7}/_{8}$	$^{11}/_{16}$	$1^{9}/_{16}$
$^{3}/_{4}$	$^{13}/_{16}$	$^{15}/_{16}$	$^{13}/_{16}$	1	$^{13}/_{16}$	$1^{7}/_{8}$
$^{7}/_{8}$	$^{15}/_{16}$	$1^{1}/_{16}$	$^{15}/_{16}$	$1^{1}/_{8}$	$^{15}/_{16}$	$2^{3}/_{16}$
1	$1^{1}/_{16}$	$1^{1}/_{4}$	$1^{1}/_{16}$	$1^{5}/_{16}$	$1^{1}/_{16}$	$2^{1}/_{2}$
$\geq 1^{1}/_{8}$	d $+^{1}/_{16}$	d $+^{5}/_{16}$	d $+^{1}/_{16}$	d $+^{3}/_{8}$	d $+^{1}/_{16}$	2.5d

807.04.7.3 Accuracy of Forming and Location: Poor matching of holes and holes that are not perpendicular to the component will be rejected.

1. Subsize Holes: Accurately locate holes such that after assembly, and before any reaming is done, a cylindrical pin with diameter 1/8 inch smaller than the nominal size of the hole may be entered perpendicular to the face of the member, without drifting, in at least 75 percent of the contiguous holes in the same plane. Failure of a hole to pass a pin with diameter 3/16 inch smaller than the nominal size of the hole will be cause for rejection.

2. Full-Size Holes: Accurately locate holes such that after assembly 85 percent of the holes in any contiguous group show no offset greater than 1/32 inch between adjacent thicknesses of metal.

807.04.8 Shop Assembly: Use Full or Progressive Assembly methods unless otherwise specified.

Place milled-to-bear ends of members in full bearing prior to drilling or reaming holes for connection.

When full-size holes are formed prior to assembly, assemble components, and verify and document that assemblies conform to plans and shop drawings, including camber, alignment, accuracy of holes, and fit of milled joints.

When holes are to be formed or finalized in assembled components, assemble components, and verify and document that assemblies conform to plans and shop drawings, including camber, alignment, accuracy of holes, and fit of milled joints prior to finalizing holes.

Submit documentation verifying assembly conformance to the Fabrication Engineer for review. Upon acceptance the assembly may be dismantled.

Match-mark assembled components in accordance with 807.04.4 and submit a diagram showing such marks to the Fabrication Engineer for record.

807.04.8.1 Full Girder or Truss Assembly: Assemble all members of each continuous beam line, plate girder, truss, arch rib, bent, tower face, or rigid frame at one time.

807.04.8.2 Progressive Girder or Truss Assembly: Progressive Girder Assembly consists of initially assembling at least three contiguous shop sections of each continuous beam line, plate girder, or arch rib.

Progressive Truss Assembly consists of initially assembling at least three contiguous panels for each truss, bent, tower face, or rigid frame, but no less than the number of panels associated with three contiguous chord lengths.

For both cases, successive assemblies consist of at least one section or panel of the previous assembly (repositioned, if necessary, and adequately pinned to assure accurate alignment) plus two or more sections or panels added at the advancing end. In the case of structures longer than 150 feet, each assembly shall be at least 150 feet long regardless of the length of individual continuous panels or sections. At the option of the fabricator, sequence of assembly may start from any location in the structure and proceed in one or both directions so long as the preceding requirements are satisfied.

Assemblies consisting of less than three shop sections or panels require approval of the engineer.

807.04.8.3 Full Chord Assembly: Assemble with geometric angles at the joints the full length of each chord of each truss or open spandrel arch, or each leg of each bent or tower. Ream web member connections using steel templates set at geometric (not cambered) angular relation to the chord line.

Mill or scribe at least one end of each web member normal to the longitudinal axis of the member. Accurately locate the templates at both ends of the member from one of the milled ends or scribed lines.

807.04.8.4 Progressive Chord Assembly: Assemble contiguous chord members in the manner specified for Full Chord Assembly and in the number and length specified for Progressive Girder or Truss Assembly.

807.04.8.5 Special Girder Assembly: Assemble rolled beams or plate girders in pairs when they are part of a simply supported span having horizontal curvature, skew, or superelevation. Assemble with floor system, lateral bracing, and cross frames on blocking, with the proper camber and relative elevation, and provide proper fittings of all parts during field erection.

807.04.8.6 Special Full Structure Assembly: Assemble the entire structure, including the floor system, for structures having curved girders or skews when in combination with grade or camber.

807.04.8.7 Bearing Assembly: Completely assemble bearing components, check accuracy of fit, and match-mark for shipping.

807.04.9 Plate Cut Edges:

807.04.9.1 Edge Planing: Sheared edges of plates more than 5/8 inch thick and carrying calculated stress shall be planed, milled, ground or thermal cut to remove a minimum of 1/4 inch. Radius reentrant corners to 3/4 inch minimum before cutting.

807.04.9.2 Visual Inspection and Repair: Visually inspect and repair plate cut edges in accordance with the latest edition of *ANSI/AASHTO/AWS D1.5 Bridge Welding Code*.

807.04.10 Shop Welding: Comply with Section 809.

807.04.11 End Connection Angles: Construct floor beams, stringers, and girders having end connection angles to specified length (+0, −1/16 inch) between heels of connection angles. If continuity is required, end connections shall be faced. Thickness of connection angles shall not be less than 3/8 inch or less than plan thickness after facing.

807.04.12 Lacing Bars: Ends of lacing bars shall be neatly rounded.

807.04.13 Direction of Rolling and Stress: Cut and fabricate steel plates and splice plates for primary members so that the direction of rolling is parallel to the direction of the main tensile and compressive stresses.

807.04.14 Bent Plates: Cold-bending of fracture-critical steels and fracture-critical members is prohibited.

Bend plates at right angles to the direction of rolling for unwelded, cold-bent, load-carrying members. Cold-bent ribs for orthotropic-deck bridges may be bent in the direction of rolling, if permitted.

Bending shall be such that no cracking of the plate occurs. Minimum bend radii, measured to the concave face of the metal, are shown in Table 807-3.

Table 807-3
Steel Plate Minimum Cold Bending Inside Radius

Plate Thickness, t (inch)	M270 Grades 36, 50, 50S, 50W, HPS 50W, and HPS 70W Minimum Bend Radius
Up to 0.50	2.0 t
Over 0.50 to 1.00	2.5 t
Over 1.00 to 1.50	3.0 t
Over 1.50 to 2.50	3.5 t
Over 2.50 to 4.00	4.0 t

For grades not included in Table 807-3, follow minimum bend radii specified in the latest *AASHTO LRFD Bridge Construction Specifications* or larger radii if recommended by the plate producer.

If shorter radii are required, hot bend plates at a temperature no greater than 1100°F. Hot-bent plates shall conform to the requirements for cold-bent plates.

Before bending, round off plate edges to a radius of 1/16 inch throughout the portion of the plate to be bent.

807.04.15 Stiffeners: Clip lower inside corner of transverse stiffeners at least 1.5 inch, and terminate longitudinal stiffeners at least 1.0 inch short of transverse stiffeners to facilitate drainage.

Bearing stiffeners of girders and stiffeners intended as supports for concentrated loads shall have full bearing (either milled, ground, or welded, as specified) on the flanges. Stiffeners not intended to support concentrated loads shall have a tight fit unless otherwise shown on the plans.

Do not weld transversely across tension flanges of beams or girders unless shown on the plans.

807.04.16 Eyebars: Fabrication shall comply with the latest *AASHTO LRFD Bridge Construction Specifications*. No welding is allowed on eye bars or to secure adjacent eye bars.

807.04.17 Stress Relieving: When specified, stress-relieve members in accordance with AWS.

807.04.18 Pins and Rollers: Pins and rollers shall be accurately turned to specified dimensions and shall be straight, smooth, and free from flaws. Finish in accordance with Table 807-1.

Forge and anneal pins and rollers more than 9 inches in diameter. Pins and rollers 9 inches or less in diameter may be either forged and annealed or cold-finished carbon-steel shafting.

In pins larger than 9 inches in diameter, bore a hole not less than 2 inches in diameter full length along the axis after the forging has been allowed to cool to a temperature below the critical range under suitable conditions to prevent damage by too rapid cooling and before being annealed.

807.04.19 Boring Pin Holes: Bore pin holes true to specified diameter, smooth and straight, at right angles with the axis of the member and parallel with each other. Produce the final surface by a finishing cut. Finish in accordance with Table 807-1.

Pin hole diameter shall not exceed pin diameter by more than 0.020 inch for pin diameters of 5 inches or less, and 0.03125 inch for larger pins.

The distance outside-to-outside of end holes in tension members and

inside-to-inside of end holes in compression members shall not vary from that specified more than 0.03125 inch. Bore holes in built-up members after the member has been assembled.

807.04.20 Screw Threads: Threads for bolts and pins for structural steel construction shall comply with the *Unified Standard Series UNC/ANSI B1.1*, Class 2A for external threads and Class 2B for internal threads. Pin ends having a diameter of 1.375 inch or more shall be threaded six threads per inch.

807.04.21 Pilot and Driving Nuts: Furnish two pilot nuts and two driving nuts for each size pin.

807.04.22 Marking and Shipping: Adhere to 105.12 when shipping material.

Paint or mark each member with an erection mark for identification in accordance with 807.04.4. Furnish an erection diagram with erection marks shown thereon. Members weighing more than three tons shall have weights marked thereon. A list and description of packaged materials shall be plainly marked on the outside of each shipping container.

Load, transport, and erect structural members in accordance with the accepted transportation and erection plan. Transport girders and beams in the upright position. Prevent excessive stress and deformation in members.

Ship pins, small parts, and packages of bolts, washers, and nuts in boxes, crates, kegs, or barrels, but the gross weight of any package shall not exceed 300 pounds.

Submit for record to the engineer as many copies of material orders, shipping statements and erection diagrams as directed. Show weights of individual members on the statements.

807.04.23 Bridge Deck Joints: Pair joint assemblies and fit before shipping. Plates, angles, or other structural shapes shall be accurately fabricated at the shop to conform to the specifications. Provide surfaces in the finished plane that are true and free of warping. Galvanize after fabrication unless otherwise specified.

807.04.24 Shear Connectors: Shear connectors may be either 3/4 inch or 7/8 inch diameter. Comply with the requirements of Section 7, Stud Welding of the latest edition of *ANSI/AASHTO/AWS/D1.5 Bridge Welding Code*.

When shear connectors are applied on painted surfaces, remove paint from surfaces to receive shear connectors to provide a clean circular area having twice the shear stud diameter. Clean circular areas in accordance with AWS prior to attachment. Do not remove paint within 2 inches of edge of the flange.

807.04.25 Shop Painting: Comply with Section 811.

807.05 ASSEMBLY AND ERECTION. Follow the accepted erection plan. Accurately assemble parts and follow all match-marks. Do not use tools that will damage or distort members. Clean bearing surfaces and permanent contact surfaces before members are assembled.

Install splices and field connections with at least 50 percent of the holes filled with bolts (either erection or untorqued permanent bolts) and cylindrical erection pins. Fill at least 10 percent of the holes with cylindrical erection pins for fit-up and alignment. Splices and connections carrying traffic during erection shall have at least 75 percent of the holes filled. Main member splices shall have all holes filled with bolts and cylindrical erection pins (half bolts and half pins) for fit-up and alignment.

Unless erected by the cantilever method, erect truss spans on blocking to give the trusses proper camber. Leave blocking in place until tension chord splices and all other truss connections are pinned and bolted. Tighten permanent bolts in splices of butt joints of compression members after the structure is in final position.

Use erection bolts of the same nominal diameter as permanent bolts and cylindrical erection pins with a 1/32 inch larger diameter. Drift holes into position during erection without enlarging holes or distorting metal.

Perform permanent bolting in accordance with 807.05.2.

807.05.1 Bolts:

807.05.1.1 High-Strength Bolts:

Assemble structural joints using ASTM A325 or A490 high-strength steel bolts tightened to the specified tension.

All bolts, nuts, washers, and direct tension indicator devices within a connection shall be of the same respective type and manufacturer.

Marking of bolts, nuts, and washers shall comply with Figure 807-1.

Figure 807-1
Markings

Type	A325 Assembly		A490 Assembly	
	Bolt	A563 Nut	Bolt	A563 Nut
1	 XYZ = Manufacturer Mark	 Grade Mark DH or 2H*		 Grade Mark DH or 2H*
3	 Note Mandatory Underline	 Grade Mark DH3	 Note Mandatory Underline	 Grade Mark DH3

*Grade 2H, plain finish, per ASTM A194 (A194 M).

ASTM A325 and A490 bolts shall have the heads marked "A325 or A490" and shall also be marked identifying the manufacturer. Type 3 bolts shall have the "A325" and "A490" underlined.

ASTM A563 nuts shall be marked identifying manufacturer. Type 1 nuts shall be marked with the grade symbol "DH" or "2H." Type 3 nuts shall be marked with the grade symbol "DH3." Nuts may be washer faced or doubled chamfered.

Washers shall be marked identifying the manufacturer. Type 3 washers shall be marked with the symbol "3."

Determine bolt length by adding to the grip the following lengths and rounding up as specified herein. The grip is the total thickness of all connected material, including filler plates. Provide bolt length resulting in no less than two threads extending beyond the nut after final tensioning.

Add length from Table 807-4. Add 5/32 inch for each hardened flat washer. Add 5/16 inch for each beveled washer. Add length required for other devices such as DTIs, structural plate washers, continuous bars, etc. Round up to nearest 1/4 inch for bolt lengths less than 4 inches. Round up to nearest 1/2 inch for bolt lengths of 4 inch and greater.

The values in Table 807-4 are taken from the Research Council on Structural Connections as values that provide appropriate allowances for manufacturing tolerances and sufficient thread engagement with an installed heavy-hex nut.

Table 807-4
Bolt Length Determination

Bolt Diameter (inch)	* Length to Add to Grip (inch)
$^{1}/_{2}$	$^{11}/_{16}$
$^{5}/_{8}$	$^{7}/_{8}$
$^{3}/_{4}$	1
$^{7}/_{8}$	$1^{1}/_{8}$
1	$1^{1}/_{4}$
$1^{1}/_{8}$	$1^{1}/_{2}$
$1^{1}/_{4}$	$1^{5}/_{8}$
$1^{3}/_{8}$	$1^{3}/_{4}$
$1^{1}/_{2}$	$1^{7}/_{8}$

* Does not include length required for washers, DTIs, etc. See specifications.

807.05.1.2 Turned Bolts: Turned bolts shall be in accordance with Section 821.07.12 for mechanical applications. For other applications, turned bolts shall be in accordance with the following unless otherwise specified.

Provide single self-locking nuts or double nuts.

The surface of the body of turned bolts shall meet the ANSI B 46.1 roughness rating value of 125 μ inch. Heads and nuts shall be hexagonal with standard dimensions for bolts of the specified nominal size or the next larger nominal size. Diameter of threads shall be equal to the body of the bolt or the nominal diameter of the bolt. Carefully ream holes for turned bolts and furnish specified bolts to provide for a light driving fit. Threads shall be entirely outside of holes. Provide a washer under the nut.

807.05.1.3 Ribbed Bolts: Ribbed bolts shall be unfinished and comply with ASTM A307, Grade A.

Provide single self-locking nuts or double nuts.

The body of ribbed bolts shall be an approved form with continuous longitudinal ribs. The diameter of the body measured on a circle through the

points of the ribs shall be 5/64 inch greater than the nominal diameter of the specified bolt.

Furnish ribbed bolts with round heads complying with ANSI B18.5. Nuts shall be hexagonal and either recessed or with a washer of suitable thickness. Ribbed bolts shall make a driving fit with the holes. Hardness of the ribs shall be such that the ribs do not permit the bolts to turn in the holes during tightening. If the bolt twists before drawing tight, carefully ream the hole and use an oversized bolt.

807.05.2 Bolted Connections: A fastener or fastener assembly is composed of bolt, nut, washers, and, if applicable, a direct tension indicator (DTI) device. Use new and unused fastener assemblies in installation and testing.

807.05.2.1 Rotational Capacity Testing: Rotational capacity tests are required and shall be performed on all Type 1, Type 3, and galvanized (after galvanizing) fastener assemblies by the manufacturer or distributor prior to shipping and by the contractor at the jobsite prior to installation. For installations utilizing DTIs, the requirement for rotational capacity testing by the contractor at the job site is dependent on results obtained during DTI Pre-Installation Verification.

Perform Rotational Capacity Test as specified herein. Test all combinations of bolt production lot, nut lot, and flat hardened washer lot used as an assembly representative of the surface and lubrication condition at time of installation. Do not use DTIs in the test assemblies. Flat hardened washers are required as part of the test even if not required as part of the installation fastener assembly. Assign a rotational capacity lot number to each combination of lots tested.

The minimum frequency of testing shall be two fastener assemblies per rotational capacity lot. Fastener assembly components shall be new and unused prior to testing and discarded after testing.

Use a dial type torque wrench. No multipliers will be allowed.

Install fasteners such that 3 to 5 full threads of the bolt are located between the bearing surfaces of the bolt head and nut. Restrain the bolt head from turning during nut rotation.

Test fastener assemblies in a Skidmore-Wilhelm Calibrator or an acceptable equivalent tension measuring device using Method 1. For fastener assemblies too short to be tested in a tension measuring device, use Method 2.

Minimum Required Tension (MRT) used for testing fastener assemblies is provided in Table 807-5 and is based on 70 percent of the specified minimum strength of bolts.

807.05.2.1.1 Method 1:

1. Tension fastener assembly to Initial Tension in accordance with Table 807-5. Mark the position of the nut with respect to the bolt for reference.

Table 807-5
Rotational Capacity Testing

ASTM A325 Bolts			
Bolt Diameter (inch)	Initial Tension (kip)[1]	MRT (kip)	115% x MRT (kip)
$^1/_2$	1	12	14
$^5/_8$	2	19	22
$^3/_4$	3	28	32
$^7/_8$	4	39	45
1	5	51	59
$1^1/_8$	6	56	64
$1^1/_4$	7	71	82
$1^3/_8$	9	85	98
$1^1/_2$	10	103	118
ASTM A490 Bolts			
Bolt Diameter (inch)	Initial Tension (kip)[1]	MRT (kip)	115% x MRT (kip)
$^1/_2$	2	15	17
$^5/_8$	2	24	28
$^3/_4$	4	35	40
7/8	5	49	56
1	6	64	74
$1^1/_8$	8	80	92
$1^1/_4$	10	102	117
$1^3/_8$	12	121	139
$1^1/_2$	15	148	170

[1] Approximately 10 percent of MRT.

2. Tension fastener assembly until the Test Rotation in Table 807-6 is reached and record the measured torque and tension.

Table 807-6
Test Rotation from Initial Tension

Test Rotation	Bolt Length
240° ($^2/_3$ turn)	≤4 diameters
360° (1 turn)	>4 diameters and ≤8 diameters
480° ($1^1/_3$ turn)	>8 diameters and ≤12 diameters
420° ($1^1/_6$ turn)	>12 diameters (A490 Only)

3. The measured torque value shall not exceed the following:

$$Torque < 0.25PD \ (foot\ pound)$$

Where: P = *measured bolt tension, pound*
D = *bolt diameter, feet*

4. The measured tension reached at the Test Rotation shall be equal to or greater than 115 percent of MRT in accordance with Table 807-5.

807.05.2.1.2 Method 2:

Bolts that are too short to test in a tension measuring device may be tested in a steel joint. The hole in the joint shall have the nominal diameter of the bolt hole in the work.

1. Determine the Initial Torque by tensioning a bolt of the minimum length accepted in the tension measuring device to Initial Tension in accordance with Table 807-5 and record the torque measured. Use the measured torque as the Initial Torque.
2. Tension the short fastener assembly to the Initial Torque in the steel joint. Mark the position of the nut with respect to the bolt for reference.
3. Tension the short fastener assembly until the Test Rotation in Table 807-6 is reached and record the measured torque.
4. The measured torque reached at the Test Rotation shall not exceed the following:

$$Torque < 0.25PD \ (foot\ pound)$$

Where: P = *115 percent of MRT, pound (refer to Table 807-5)*
D = *bolt diameter, feet*

807.05.2.1.3 Acceptance Criteria: The fastener assembly will be considered non-conforming if any of the following occur:

1. Inability to install the assembly to the nut rotation in Method 1 or 2 as applicable.
2. Exceeding the torque limit in Method 1 or 2 as applicable.
3. Inability to meet tension requirement in Method 1.

4. Inability to remove the nut after reaching the Test Rotation.

5. Shear failure of bolt or nut threads as determined by visual examination following removal.

6. Torsional or torsional/tension failure of the bolt. Expect elongation of the bolt in the threads between the bearing face of the nut and the bolt head at Test Rotation; do not classify such elongation as a failure.

807.05.2.2 Submittals: Prior to final installation, submit for record the following to the Project Engineer:

1. Mill Test Report for all mill steel used in the manufacture of the bolts, nuts, washers, and DTI devices. Reports shall include the place where the material was melted and manufactured.

2. Manufacturer's Report providing the following:

a. Lot number of each item tested

b. Rotational capacity lot number

c. Rotational capacity tests results

d. Certification that all items are in compliance with project and ASTM specifications

e. Location of manufacture of fastener assembly components

3. Coating Report containing the type, thickness, location of application, and compliance with the appropriate specifications

4. Installer's Report providing the following:

a. Lot number of each item tested

b. Rotational capacity lot number

c. Rotational capacity tests results

d. Installation Test in accordance with 807.05.2.5.

807.05.2.3 Shipping Fasteners: Permanently mark all containers with the manufacturer lot number and the rotational capacity lot number such that identification will be possible at any stage prior to installation.

807.05.2.4 Bolted Parts: Surfaces of bolted parts in contact with the bolt head or nut shall not have a slope of more than 1:20 with respect to a plane normal to bolt axis. Bolted parts shall fit solidly together when assembled and shall not be separated by gaskets or other compressible material**.**

Clean and prepare faying surfaces as follows:

1. When steel is specified to be painted, apply SSPC-SP10 Near-White Blast Cleaning and apply an inorganic zinc primer all in accordance with Section 811. Provide a Class B slip coefficient of 0.50 minimum.

2. When steel is specified to be unpainted, apply SSPC-SP6 Commercial Blast Clean in accordance with Section 811. Provide a Class B slip coefficient of 0.50 minimum.

3. When galvanized steel is specified, after galvanizing and prior to assembly, abrade contact surfaces within joints by wire brushing or light blasting. Provide a Class C slip coefficient of 0.33 minimum. Do not produce a break or discontinuity in the zinc surface. Wire brushing shall be a light application of manual brushing that marks or scores the surface but removes relatively little of the zinc coating. Blasting shall be a light brush-off treatment which will produce a dull gray appearance. ASTM A490 bolts shall not be galvanized. When ASTM A490 bolts are specified to connect galvanized parts, bolts shall be painted to prevent electrolytic action.

4. When metallic thermal spray coatings are specified, conform to 811.06.6.2.

807.05.2.5 Installation and Inspection: Use Direct Tension Indicator Method, in accordance with 807.05.2.5.1, unless otherwise authorized in writing by the Bridge Engineer.

Install fastener assemblies of the size and quality specified in properly aligned holes. Install a hardened washer directly under nut or bolt head, whichever is the element turned in tightening. Use two hardened washers with ASTM A490 bolts.

A flat washer may be used when the abutment surface adjacent to the bolt head or nut does not have a slope of more than 1:20 with respect to a plane normal to bolt axis. If an outer face of the bolted part has a slope of more than 1:20 with respect to a plane normal to the bolt axis, use a smooth beveled washer to compensate for lack of parallelism.

Do not reuse or re-torque ASTM A325 or ASTM A490 bolts. Retightening previously tightened bolts which have been loosened by tightening adjacent bolts will not be considered as reuse or re-torque.

Protect fasteners from dirt and moisture at the jobsite. Reject fasteners contaminated with dirt and moisture. Only take as many fasteners as are anticipated to be installed and tightened during a work shift from protected storage. Return unused fasteners to protected storage at the end of the shift. Do not clean fasteners of lubricant that is present in as-delivered condition.

Provide a tension measuring device at all jobsites when high strength bolts are being installed and tensioned. Use the device to perform testing, validate installation procedures, train installers, and calibrate wrenches.

Impact wrenches, if used, shall be of adequate capacity and sufficiently supplied with air to perform the required tensioning of each bolt in approximately 10 seconds.

Minimum Required Tension (MRT) for fasteners is provided in Table 807-7 and is based on 70 percent of the specified minimum strength of bolts. All tests shall demonstrate that the tension measuring device indicates a tension not less than 105 percent of MRT.

Before installation of fasteners in the work, the engineer will inspect the marking, surface condition, and storage of bolts, nuts, washers, DTIs, and the faying surfaces of joints for compliance with the specifications.

The engineer will inspect testing procedures and/or calibration to confirm that the selected procedure is properly used, the fastener assemblies match those to be used on the project, and the specified tensions are provided. The engineer will inspect the installation of fasteners in the work to assure that the specified tensions are provided and that the selected procedure is routinely properly applied.

Table 807-7
Installation and Inspection Tension Values

ASTM A325 Bolts				
Bolt Diameter, (inch)	MRT (kip)	10% x MRT (kip)	105% x MRT (kip)	110% x MRT (kip)
$^1/_2$	12	1	13	13
$^5/_8$	19	2	20	21
$^3/_4$	28	3	29	31
$^7/_8$	39	4	41	43
1	51	5	54	56
$1^1/_8$	56	6	59	62
$1^1/_4$	71	7	75	78
$1^3/_8$	85	9	89	94
$1^1/_2$	103	10	108	113
ASTM A490 Bolts				
Bolt Diameter, (inch)	MRT (kip)	10% x MRT (kip)	105% x MRT (kip)	110% x MRT (kip)
$^1/_2$	15	2	16	17
$^5/_8$	24	2	25	26
$^3/_4$	35	4	37	39
$^7/_8$	49	5	51	54
1	64	6	67	70
$1^1/_8$	80	8	84	88
$1^1/_4$	102	10	107	112
$1^3/_8$	121	12	127	133
$1^1/_2$	148	15	155	163

807.05.2.5.1 Direct Tension Indicator (DTI) Method: Do not allow the turning element to be in contact with the DTI. Give special attention to proper installation of flat hardened washers when DTIs are used with bolts installed in oversize or slotted holes.

Use a 0.005 inch tapered feeler gauge for measuring DTI compression in the spaces between the DTI protrusions. A feeler gauge refusal is defined as the inability to touch the bolt shank with the feeler gauge.

1. DTI Method Pre-installation Verification:

Use a Skidmore-Wilhelm Calibrator or equivalent tension measuring device. Use a special flat insert in place of a bolt head holding insert to provide a DTI bearing surface. Perform at least three field verification tests as

specified herein. A fastener assembly verification lot consists of each combination of bolt production lot, nut lot, washer lot, DTI lot, and DTI position relative to the turned element (bolt head or nut) to be used on the project. Test each fastener assembly verification lot with DTIs and flat hardened washers arranged as those in the actual connections to be tensioned. Restrain the element intended to be stationary (bolt head or nut) from rotation. Assign a verification lot number to each fastener assembly verification lot tested.

Use rigid spacers if required so that at least three and preferably no more than five threads are located between the bearing face of the nut and the bolt head. If the bolt is too short to be tested in the tension measuring device, use a similar bolt of adequate length in place of the short bolt.

Tension the fastener to a verification tension of 105 percent of MRT in accordance with Table 807-7. If an impact wrench is used, the tension developed using the impact wrench shall be no more than two-thirds of the verification tension. Use a manual wrench to complete tensioning. Record the number of refusals of a 0.005 inch feeler gauge in the spaces between the DTI protrusions. Reject the DTI lot if the number of refusals for any DTI tested exceeds the Maximum Number of Refusals shown in Table 807-8.

Further tension the fastener until a 0.005 inch feeler gauge is refused in all DTI spaces and a visible gap exists in at least one space between the protrusions. Record tension at this condition and remove fastener assembly from the tension measuring device.

For production bolts too short to be tested in the tension measuring device, additionally assemble the short fastener assembly with an unused DTI from the same lot in a connection of steel plates of equivalent thickness to the work and tension short fastener until a 0.005 inch feeler gauge is refused in all DTI spaces and a visible gap exists in at least one space between the protrusions. Remove short fastener assembly.

The fastener assembly verification lot is accepted if none of the following occur.

1. Inability to compress DTI protrusions to have a 0.005 inch feeler gauge refused in all DTI spaces and a visible gap existing in at least one space between the protrusions.
2. Inability to remove the nut when removing the production fastener assembly from the tension measuring device or from the steel plate connection.
3. Shear failure of threads in production bolt or nut as determined by visual examination following removal.

4. Torsional or torsional/tension failure of the production bolt. Elongation of the bolt in the threads between the bearing face of the nut and the bolt head is acceptable.

For an unaccepted fastener assembly verification lot, perform field Rotational Capacity Test in accordance with 807.05.2.1 to determine acceptance of the bolt, nut and hardened washer lot.

Accept the DTI lot if the recorded tension during the DTI pre-installation verification method at one visible gap is less than 95 percent of the average tension recorded at Test Rotation in the field Rotational Capacity Test.

Table 807-8
DTI Verification Test

A325 Bolts		
Bolt Diameter (inch)	DTI Spaces	Verification Test Maximum Number of Refusals
$^1/_2$	4	1
$^5/_8$	4	1
$^3/_4$	5	2
$^7/_8$	5	2
1	6	2
$1^1/_8$	6	2
$1^1/_4$	7	3
$1^3/_8$	7	3
$1^1/_2$	8	3
A490 Bolts		
Bolt Diameter (inch)	DTI Spaces	Verification Test Maximum Number of Refusals
$^1/_2$	5	2
$^5/_8$	5	2
$^3/_4$	6	2
$^7/_8$	6	2
1	7	3
$1^1/_8$	7	3
$1^1/_4$	8	3
$1^3/_8$	8	3
$1^1/_2$	9	4

2. DTI Method Installation:

Install fasteners in all holes of the connection and bring to snug condition. Snug condition is defined as the fastener tension that exists when all joint material plies are in firm contact and DTI protrusions are partially compressed with a visible gap greater than 0.005 inch in all spaces. If a DTI exhibits a refusal of the 0.005 inch feeler gauge, remove the fastener, install a new unused DTI, and bring the fastener to snug condition.

Further tension all fasteners, progressing systematically from the most rigid part of the connection to the free edges in a manner that will minimize relaxation of previously tensioned fasteners. Proper tensioning of fasteners may require more than a single cycle of systematic partial tensioning prior to final tensioning. Final tensioning is defined as compression of the DTI protrusions resulting in having the minimum number of refusals in accordance with Table 807-9 and having at least one visible gap. If a DTI does not conform to these specifications, remove the fastener assembly, install a new fastener assembly, and bring the fastener to specified final tensioning.

3. DTI Method Inspection:

Visually inspect all DTIs in the connection to verify protrusions are deformed to approximate final position and that a visible gap remains. If a DTI exhibits no visible gap, remove the fastener assembly, install a new fastener assembly, and bring the fastener to specified final tensioning.

Use the specified 0.005 inch feeler gauge on at least 10 percent of the fasteners in a connection, but not less than two fasteners, and verify that the number of refusals conforms to Table 807-9. If the number of refusals on any inspected DTI does not conform to Table 807-9, all DTIs in the connection will be inspected with the 0.005 inch feeler gauge, and any fasteners not sufficiently tensioned shall be further tensioned and re-inspected for visible gap and number of refusals of the 0.005 inch feeler gauge.

If all inspected DTIs conform to the specifications, the connection will be accepted. Should inspection reveal excessive tension (no visible gap) or inadequate tension (less than minimum required refusals of the 0.005 inch feeler gauge), adjust installation procedures to meet specifications.

Table 807-9
DTI Inspection

A325 Bolts		
Bolt Diameter (inch)	DTI Spaces	Installation Minimum Number of Refusals
$^1/_2$	4	2
$^5/_8$	4	2
$^3/_4$	5	3
$^7/_8$	5	3
1	6	3
$1^1/_8$	6	3
$1^1/_4$	7	4
$1^3/_8$	7	4
$1^1/_2$	8	4
A490 Bolts		
Bolt Diameter (inch)	DTI Spaces	Installation Minimum Number of Refusals
$^1/_2$	5	3
$^5/_8$	5	3
$^3/_4$	6	3
$^7/_8$	6	3
1	7	4
$1^1/_8$	7	4
$1^1/_4$	8	4
$1^3/_8$	8	4
$1^1/_2$	9	5

807.05.2.5.2 Turn-of-Nut Method

1. Turn-of-Nut Method Pre-installation Verification:

Test a representative sample of not less than three fastener assemblies for each bolt diameter, length, type, and grade used in the work using a tension measuring device. The test assembly shall include flat hardened washers arranged as those in the actual connections to be tensioned. Demonstrate in all tests that the method for estimating the snug condition and controlling the turns from snug condition given in Table 807-10 develops a tension not less than 105 percent of MRT in Table 807-7. Follow the tension measuring device procedures for fastener assembly installation during testing.

2. Turn-of-Nut Method Installation:

Install fasteners in all holes of the connection and bring to snug condition. Snug condition is defined as the fastener tension that exists when all joint material plies are in firm contact. This may be attained by a few impacts of an impact wrench or the full effort of a worker using an ordinary spud wrench.

Temporarily match mark bolt, nut, and bolted part. Tension all fasteners progressing systematically from the most rigid part of the connection to the free edges in a manner that will minimize relaxation of previously tensioned fasteners in accordance with the rotations specified in Table 807-10.

The rotations specified in Table 807-10 are relative to the bolt, regardless of the element (nut or bolt) being turned. The rotations specified are applicable only to connections in which all material within the grip of the bolt is steel.

For fasteners installed by 1/2 turn and less, tolerance for the specified rotation is minus 0 degrees, plus 30 degrees. For fasteners installed by 2/3 turn and more, tolerance for the specified rotation is minus 0 degrees, plus 45 degrees.

When bolt length exceeds 12 bolt diameters, determine required rotation by testing in a suitable tension device simulating actual conditions.

Table 807-10
Nut Rotation from Snug Condition

	Disposition of Outer Faces of Bolted Parts		
Bolt Length (Measured from underside of head to extreme end of point)	Both faces normal to bolt axis	One face normal to bolt axis and other face sloped not more than 1:20 (bevel washer not used)	Both faces sloped not more than 1:20 from normal to bolt axis (bevel washers not used)
≤ 4 diameters	$^1/_3$-turn	$^1/_2$-turn	$^2/_3$-turn
> 4 diameters and ≤ 8 diameters	$^1/_2$-turn	$^2/_3$-turn	$^5/_6$-turn
> 8 diameters and ≤ 12 diameters	$^2/_3$-turn	$^5/_6$-turn	1 turn

3. Turn-of-Nut Method Inspection:

Calibrate a manual job inspection torque wrench in a tension measuring device. Install five fastener assemblies of each bolt diameter, length, type, and

grade to be used in the work in the tension measuring device and tension to 10 percent of MRT shown in Table 807-7. Further tension the fastener assemblies to MRT with the job inspection torque wrench and record the respective torque value. For the five torque values corresponding to MRT, discard the low and high values and average the remaining three values to determine the Job Inspection Torque.

Inspect fasteners by applying the job inspection torque wrench to at least 10 percent of the fasteners, but not less than two fasteners, selected by the engineer at random in each connection. If no bolt or nut is turned by application of the Job Inspection Torque, the connection will be accepted as properly tensioned. If a bolt or nut is turned by the application of less than the Job Inspection Torque, either apply the Job Inspection Torque to all fasteners in the connection, or re-tension all fasteners in the connection using the original installation method and in accordance with the specified tension. Repeat the inspection process until the connection is accepted.

807.05.2.5.3 Calibrated Wrench Method

Only use Calibrated Wrench Tightening when required by the plans or directed by the engineer. This specification does not recognize standard torques determined from tables or from formulas, which are assumed to relate torque to tension.

1. Calibrated Wrench Method Pre-Installation Verification:

Set wrenches to provide a tension not less than 105 percent of and not greater than 110 percent of MRT in Table 807-7. Calibrate the installation procedures at least once each working day for each bolt diameter, length, and grade using the following:

a. The length of air hose that will be used during installation and the fastener assemblies that are being installed in the work.

b. Accomplish calibration in a tension measuring device capable of indicating bolt tension. Tension three fasteners of the diameter, length, type, grade and washer orientation as those being installed in the work.

c. Recalibrate wrenches when significant differences are noted in the surface condition of the bolts, nuts, bolt/nut threads, or washers.

2. Calibrated Wrench Method Installation:

Install fasteners in all holes of the connection and bring to snug condition. Snug condition is defined as the fastener tension that exists when all joint material plies are in firm contact. This may be attained by a few impacts of an impact wrench or the full effort of a worker using an ordinary spud wrench.

Further tension the connection using the calibrated wrench. Tension all fasteners, progressing systematically from the most rigid part of the

connection to the free edges in a manner that will minimize relaxation of previously tightened fasteners. Return the wrench to touch up previously tensioned fasteners which may have been relaxed as a result of the subsequent tensioning of adjacent fasteners until all fasteners are tensioned to the specified value.

3. Calibrated Wrench Method Inspection:

Perform Calibrated Wrench Method Inspection in accordance with Turn-of-Nut Method Inspection of 807.05.2.5.2.

807.05.3 Falsework: Design falsework in accordance with Section 817.

807.05.4 Straightening Bent Material: Submit for review and acceptance; repair procedures for corrective action. Straighten plates, angles, other shapes and built-up members using methods that will not produce fracture or other damage. Straighten distorted members by mechanical means or by supervised application of a limited amount of localized heat. In no case shall the temperature of the steel exceed 1100°F (590°C).

Following the corrective action, carefully inspect the surface of the metal for evidence of fracture or other damage.

807.05.5 Installing Pin Connections: Use pilot and driving nuts to install pins when required at no additional cost to the Department. Drive pins so that members will be in full bearing with the pins. Tighten pin nuts and burr threads at face of nut to restrain nut.

807.05.6 Field Welding: Field welding is not allowed on structures unless specifically shown on the plans. When shown, comply with Section 809.

807.05.7 Misfits: Correction of minor misfits may be expected. Minor reaming will be considered a legitimate part of erection. Use a reaming tool no larger than the bolt hole diameter. Ream no more than 5 percent of the holes in the connection.

Immediately report any error in fabrication or deformation which prevents proper assembly and fitting of parts. Submit corrective measures to the engineer for review and acceptance. Make all corrections in the presence of the Department's inspector. All corrections and replacements shall be at no additional cost to the Department.

807.05.8 Field Painting: Comply with Section 811.

807.06 PROVISIONS FOR STRUCTURE TYPES.

807.06.1 Orthotropic-Deck Bridges:

807.06.1.1 Protection of Deck Plate after Blasting: If blasting

is used to prepare the deck plate to receive a wearing surface, apply a protective coating to the plate immediately after cleaning.

807.06.1.2 Dimensional Tolerance Limits: Apply dimensional tolerance limits for orthotropic-deck bridge members to each completed but unloaded member in accordance with the latest *AASHTO LRFD Bridge Construction Specifications*.

807.06.2 Weathering Steel: When weathering steel is specified the following additional requirements apply.

807.06.2.1 High-Strength Fastener Assemblies: Use Type 3 fastener assemblies.

807.06.2.2 Flange Drip Plate near Bents: Provide lower flange drip plates on the exterior girders at plan locations to prevent staining of concrete from runoff.

807.06.2.3 Paint Portions of Structural Metalwork near Bents: Clean, paint, and caulk in accordance with Section 811. Color paint topcoat in accordance with 811.03. Use flat paint topcoat finish.

Clean, paint and caulk structural metalwork near bents for a distance of 1.5 times the steel member depth but no less than 10 feet measured from each bent centerline.

807.06.2.4 Clean Non-painted Exposed Surfaces: Clean all exposed surfaces of all grease, oil, paint, or other soilage. Blast clean outside surfaces of exterior girders and the bottom surface of the bottom flange of all girders, either before or after erection, to SSPC-SP 6 in accordance with Section 811. Keep cleaned surfaces free of grease, oil, markings, paint, or other soilage.

807.06.2.5 Caulk Non-painted Steel Details: Caulk non-painted steel details in accordance with 811.06.5.6. Color caulk to match weathering steel in accordance with 811.03.

807.06.2.6 Restore Concrete Finish: Restore all stained concrete surfaces to the required finish at the time of final acceptance.

807.06.3 Anchor Bolts: Anchor bolts are devices used to transfer load to a concrete element. Loads may be tension, shear, or a combination. Layout anchor bolt locations in accordance with the plans. Submit placement procedures to the engineer for review. The submittal shall include procedures for installation and grouting.

807.06.3.1 Placement: Anchor bolts placed in fresh concrete shall be held in position and alignment. Consolidate concrete thoroughly around anchor bolts.

Use blockouts to place anchor bolts in hardened concrete. Use a non-shrink grout from the AML consistent with the specific design requirements. Size the blockouts in accordance with grout manufacturer's recommendations.

Mechanical or epoxy anchor bolt systems may only be used when specified on the plans. Install anchor bolt systems in accordance with manufacturer's recommendations.

Coring to place anchor bolts in hardened concrete is not allowed.

807.06.3.2 Erection and Assembly: Verify the location and alignment of the anchor bolt pattern. Replace bent or misaligned anchor bolts designed for tension, such as curved girders, tower bents, overhead sign support systems, high mast light poles, etc. Set bolts properly at initial casting and construct system without damaging the bolts.

Overhead sign supports and high mast light pole bolt patterns require preloading by a specified tightening procedure in accordance with 807.06.3.5.1.

807.06.3.3 Quality Control: Provide anchor bolts in compliance with the plans (size and grade, bolt material and coating, projection length, bolt pattern and orientation, etc.). Corresponding holes between the base plate and top template plate shall be aligned within 1/8 inch. Individual bolts shall not be out of plumb more than 1/8 inch per 3 feet. Straightening misaligned bolts by bending is prohibited. The Engineer of Record must approve any corrective measure for misaligned bolts. Do not use bolts or nuts with damaged threads that require more than minimal effort by one worker using only a spud wrench to turn the nut. Make the engineer aware of damaged threads and correct to the satisfaction of the engineer.

807.06.3.4 Lubrication: Clean threads of all foreign matter and

lubricate with beeswax immediately prior to placement and tightening of nuts. If delayed more than 24 hours after being lubricated, repeat cleaning and lubricating procedure.

807.06.3.5 Tightening Procedures: Tighten anchor bolts using procedures specified on the plans or as directed by the Engineer of Record.

807.06.3.5.1 Overhead Sign and Light Supports: Install the bottom nut and washers on each anchor bolt. Level the top template by adjusting the bottom nuts so that the template rests on each washer and the distance between the top of the support surface and the bottom face of the nut is approximately 1/2 inch. Remove the template, lubricate the bearing surfaces of the bottom nuts and washers with beeswax, and erect and plumb the structure. Adjust the bottom nuts so that each is bearing on the washer against the base plate. With all cantilever elements removed and with the plumbed structure supported, lubricate the bearing surfaces of the top nuts and washers, install the washers and top nuts, and turn them onto the bolts so that each top nut is hand-tight against the washer.

Using a wrench, turn the bottom nuts up in the sequence specified below to a snug condition. Snug condition is defined as the full effort of a worker on a 12-inch wrench. Using the same sequence, turn the top nuts down to the same snug condition.

Induce a preload into the bolt using a turn-of-nut method. Tighten each top nut in the specified sequence 30 degrees past snug condition. Repeat this process of tightening each top nut an additional 30 degrees down until each top nut has been tightened 60 degrees past snug tight.

Bolt tightening sequence shall be as follows. For an eight-bolt pattern, number the bolts 1 through 8 in clockwise order viewed from above, beginning with bolt 1 on the side away from the heaviest cantilever element. The tightening sequence shall be 1, 5, 2, 6, 8, 4, 7, and 3. For a six-bolt pattern, number the bolts 1 through 6 in clockwise order viewed from above, beginning with bolt 1 on the side away from the heaviest cantilever element. The tightening sequence shall be 1, 4, 2, 5, 6, and 3. Use a similar technique for other bolt patterns.

807.07 MEASUREMENT. Structural metalwork will be measured per lump sum. No weight measurement of structural metals will be made. Estimated weights of structural metalwork shown on the plans are approximate and for information only. It is the contractor's responsibility to determine the correct weight of each grade of metal furnished. No adjustment

in contract price will be made due to discrepancies in the estimated weights shown on the plans. Shop bills will not be required.

807.08 PAYMENT. Payment for the completed and accepted items will be made at the contract lump sum price, which includes furnishing, fabricating, cleaning, applying coatings, erecting, temporary works, materials, labor, equipment, and all work necessary to complete the item.

Partial payments for stockpile of raw materials and fabrication costs will be allowed in accordance with Section 109.

When the engineer orders changes in the work which vary the weight of metal to be furnished, unit prices will be established by dividing the contract lump sum amount by the estimated weight shown on the plans. Compensation will be in accordance with 109.04.

Changes ordered by the engineer in the grade of steel to be furnished, which result in additional cost to the contractor, will be compensated for in accordance with 109.04.

Changes in the grade or quantity of steel which result from contractor adjustments in plate dimensions for efficiency in fabrication shall be at no additional cost to the Department.

Payment will be made under:

Item No.	Pay Item	Pay Unit
807-01	Structural Metalwork (Grade)	Lump Sum
807-02	Structural Metalwork (Anchor Bolts)	Lump Sum
807-03	Structural Metalwork (Access System)	Lump Sum
807-04	Structural Metalwork	Lump Sum

Section 808
Steel Grid Flooring

808.01 DESCRIPTION. Furnish and install steel grid flooring. Steel grid flooring may contain sections filled with concrete.

808.02 MATERIALS. Materials shall comply with the following:

Paint and Protective Coatings	811
Portland Cement Concrete	901
Metals	1013

Use Class A1 concrete with Grade F aggregate for concrete filled steel grid floors. Unless otherwise specified, steel grid flooring shall be hot-dipped galvanized.

808.03 FABRICATION. Before fabrication or construction is undertaken, submit shop drawings and erection drawings in accordance with 801.05.

Fabricate in accordance with the plans and specifications. Deviations will not be permitted without approval of the Bridge Engineer.

Provide the DOTD Fabrication Engineer at least 30-days advance written notice of the beginning of work at the mill or shop so that inspection may be provided. No material shall be manufactured or work done in the shop before shop drawings have been accepted and before the DOTD Fabrication Engineer has been notified.

808.04 FACILITIES FOR INSPECTION. Furnish facilities for inspection of material and workmanship in the mill and shop as described in 807.04.2.

808.05 STORAGE OF MATERIALS. Store steel grid flooring as specified in 807.04.1.

808.06 STRAIGHTENING MATERIAL. If straightening is necessary, straighten using methods that will not damage the metal.

808.07 ARRANGEMENT OF SECTIONS. Where main support elements are normal to the centerline of roadway, extend the grid floor units over at least three supports for the full width of roadway for roadways up to 40 feet. Where transverse joints are required, place joints over supports. Where longitudinal joints are required, shear transfer devices shall be provided in accordance with the plans.

Where main support elements are parallel to the centerline of roadway, extend the grid floor units over at least three supports for the full width of the roadway for roadways up to 40 feet. Where longitudinal joints are required, place joints over supports. Where transverse joints are required, provide shear transfer devices in accordance with the plans.

Attach trim plate at all free edges of the grid floor panels in accordance with the plans.

808.08 PROVISION FOR CAMBER. Shop camber grid flooring as required for final required camber for the installation. Provide full contact between the grid floor bearing bars and the supporting surface.

808.09 FIELD ASSEMBLY. In order to provide the best riding surface and transition between panels, assemble the largest possible areas of grid flooring before welding or connecting to its supports. Make main elements continuous and connect sections along their edges by welding. Connections will be subject to approval.

808.10 CONNECTION TO SUPPORTS. Connect the floor to its steel supports by welding. Before welding, either load the floor to make a tight joint with full bearing or clamp down. Location, length, and size of welds will be subject to acceptance of the Bridge Engineer, but in no case shall they be less than the manufacturer's standards.

Securely fasten ends of main steel members of the slab together at the sides of the roadway for the full length of span by steel plates or weld angles to ends of main members.

Do not weld grid flooring to the steel bridge rail at the gutter line.

808.11 WELDING. Comply with Section 809 for shop and field welding. Comply with the approved method and location of field welding as shown on the shop drawings**.**

Remove galvanized coatings prior to welding grid floors to support members.

808.12 PROTECTIVE COATING. Unless otherwise specified, hot dips galvanize the steel grid floor in accordance with Section 811.

Repair galvanized coatings after welding.

808.13 CONCRETE FILLER. When specified, place concrete filler in the open grid. Use galvanized metal forms.

Floor types with bottom flanges not in contact shall be provided with bottom forms of metal to retain the concrete filler.

Fit metal forms tightly on bottom flanges of floor members and place in short lengths extending only about 1 inch onto the edge of each support. In all cases forms shall provide for adequate bearing of the slab on the support.

Consolidate the concrete by vibrating the steel grid floor. The vibrating device and manner of operating it will be subject to approval.

808.14 MEASUREMENT. The quantity of steel grid flooring for payment will be the design area as specified on the plans.

Concrete for filling steel grid flooring will not be measured for payment.

808.15 PAYMENT. Payment for steel grid flooring will be made at the contract unit price per square foot, which includes furnishing, fabricating and installing all materials, including, but not limited to, base plates, trim angles, trim plates, galvanizing or other coating (if required), and all welding, bolting, and connections.

Payment will be made under:

Item No	Pay Item	Pay Unit
808-01	Steel Grid Flooring (Type)	Square Foot

Section 809
Welding

809.01 DESCRIPTION. Provide structural welding, qualifications, and testing.

809.02 QUALIFICATION OF PROCEDURES, WELDERS, AND WELDING OPERATORS.

809.02.1 General: The Department's Construction Section will be the qualifying agency.

Qualifying tests may be made at locations selected by the contractor and approved by the Department. Give advance notice of no less than one week to the Department's Fabrication Engineer so that the Department can arrange for the presence of the inspector.

Provide two copies of the required reports to the Department's Fabrication Engineer.

Identify each welder and welding operator's work with a temporary marking.

Provide documentation of welder and welding operator qualifications to the Department's Fabrication Engineer for review and acceptance.

All costs incidental to welding qualifications shall be the responsibility of the contractor.

809.02.2 Structural Steel, Steel Pipe, and Tubular Members:

809.02.2.1 Structural Steel: Provide qualified welding procedures, welders, and welding operators, in accordance with the latest edition of *ANSI/AASHTO/AWS D1.5 Bridge Welding Code*.

809.02.2.2 Steel Pipe and Tubular Members: Provide qualified welding procedures, welders, and welding operators, in accordance with the latest edition of *ANSI/AWS D1.1 Structural Welding Code-Steel*. For structural members that could fall on traffic, provide non-destructive testing according to *ANSI/AASHTO/AWS D1.5 Bridge Welding Code*.

809.02.3 Reinforcing Steel: Provide qualified welding procedures and welders, in accordance with the latest edition of *ANSI/AWS D 1.4 Structural Welding Code-Reinforcing Steel*.

809.02.4 Aluminum: Provide qualified welding procedures, welders, and welding operators, in accordance with the latest edition of *ANSI/AWS D 1.2 Structural Welding Code-Aluminum*.

809.02.5 Electrodes: Qualify and certify electrodes in accordance with the latest edition of the appropriate *ANSI/AASHTO/AWS Welding Codes*.

809.03 WELDING. Provide size, type, and length of welds as shown on the plans and shop drawings. Identify each welder and welding operator's work with a temporary marking.

809.03.1 Structural Steel, Steel Pipe, and Tubular Members:

809.03.1.1 Structural Steel: Comply with the latest edition of *ANSI/AASHTO/AWS D1.5 Bridge Welding Code*.

809.03.1.2 Steel Pipe and Tubular Members: Comply with the latest edition of *ANSI/AWS D1.1 Structural Welding Code-Steel*.

809.03.2 Reinforcing Steel: Welding of reinforcing steel is only allowed when specified on the plans or with written permission from the Department's Fabrication Engineer.

Comply with the latest edition of *ANSI/AWS D1.4 Structural Welding Code-Reinforcing Steel*.

809.03.3 Aluminum: Comply with the latest edition of *ANSI/AWS D1.2 Structural Welding Code-Aluminum*.

809.04 NONDESTRUCTIVE TESTING.

809.04.1 Structural Steel, Steel Pipe, and Tubular Members: Comply with the latest edition *ANSI/AASHTO/AWS D1.5 Bridge Welding Code* except that the ends of all groove welds on main members shall be tested with the dye penetrant inspection method.

809.04.2 Reinforcing Steel: Comply with the latest edition of *ANSI/AWS D1.4 Structural Welding Code-Reinforcing Steel*.

809.04.3 Aluminum: Comply with the latest edition of *ANSI/AWS D1.2 Structural Welding Code-Aluminum*. For sign support structures, dye penetrant test all butt weld splices in all members and all fillet welds connecting flanges to members. Use dye penetrant inspection on 10 percent of all remaining welded connections unless a failing test occurs, at which time 100 percent of the welds will be inspected for that sign support structure.

809.05 MEASUREMENT AND PAYMENT. All welding, labor, materials, weld metals deposited, testing, and inspection will not be measured for payment. Unless otherwise specified, payment will be included in payment for the associated welded items.

Section 810
Bridge Railings, Hand Railings, Permanent Roadway Barriers, and Pier Protection Systems

810.01 DESCRIPTION. Furnish and construct bridge railings, hand railings, permanent roadway barriers, and pier protection systems in accordance with the contract.

810.02 MATERIALS. Comply with the following sections and subsections:

Portland Cement Concrete	901
Joint Materials	1005
Reinforcing Steel	1009
Concrete Curing Materials, Admixtures, Special Finishes	1011
Structural Metals	1013
Steel Tubing and Pipe	1013
Carbon Steel Bolts, Nuts, and Washers	1013
High-Strength Bolts, Nuts, Washers, and DTIs	1013
Anchor Bolts	1013

Use Class A1 concrete unless otherwise specified on the plans.

Galvanize all structural steel in accordance with subsection 811.08. Structural steel shall be AASHTO M270, Grade 50.

Galvanize bolts, nuts, washers, and DTIs in accordance with Section 811.

810.03 CONSTRUCTION REQUIREMENTS. Place slip-formed concrete with a slip-form placing machine designed to spread, vibrate, consolidate, and finish concrete in one pass of the machine so that a minimum of hand finishing will be necessary to provide a dense, homogeneous unit true to lines and grade.

Conform to Sections 805, 806, 807, and 811, except as provided in this section. Perform excavation and backfilling and dispose of excess excavated material in accordance with 202.02.

Allow bridge deck concrete to attain a minimum compressive strength of 4000 psi before placing reinforcement, forms, concrete, or metal for bridge railings. On continuous spans, do not place railing until the deck of the continuous unit is completed.

Allow foundation concrete for roadway barriers and pier protection systems a minimum of three days curing time and to attain a minimum compressive strength of 1600 psi before placing reinforcing steel and forms for concrete barriers. Foundation concrete shall attain minimum specified compressive strength prior to placing concrete.

Wet cure concrete portions of bridge railings, hand railings, roadway barriers, and pier protection systems in accordance with 805.06.1 for 14 days.

Apply Class 2 and 3 finishes to all visible concrete surfaces or as defined on the plans.

810.04 LINE AND GRADE. Lines and grades of railings and barriers shall be true to that shown on the plans. Place railings, barriers, and curbs perpendicular to roadway cross-slope and grade.

810.05 JOINTS. Construct joints as shown on the plans and as follows.

All joints shall be formed without saw cutting. Joint edges shall be uniformly clean with no ragged edges. Support preformed joint material to prevent movement during placement or slip-forming operations.

810.05.1 Concrete Roadway Barriers, Pier Protection Systems, and Foundations. Isolate concrete barriers and foundations from the travel pavement and provide a formed, vertical 1/2-inch to 1.0-inch open joint, full depth through the barrier and foundation, placed at 40-foot to 60-foot intervals. Seal the formed vertical joint with preformed joint filler or a poured and extruded joint sealant in accordance with 1005.01 and 1005.02, respectively. Between formed open full-depth joints, vertically tool a 3/4-inch deep joint around the full perimeter of the exposed faces of the barrier immediately after placement of barrier concrete. Space tooled vertical joints according to plan locations, but no more than 20 feet apart.

810.05.2 Concrete Bridge Railings. Provide a formed open joint for concrete bridge railings of the size shown on the plans at the centerline of each bent and provide a water stop in accordance with 1005.07 or extension of the joint seal to seal the joint. Between formed open joints, tool a 3/4 inc-h deep joint around the full perimeter of the exposed faces of the barrier. Space tooled vertical joints according to the plan locations, but no more than 20 feet apart.

810.06 METAL RAILING. Drill holes for field connections with railing in place on the structure at proper grade and alignment. Adjust railing, correct alignment and camber throughout the railing length, and provide proper

matching of joints, prior to finalizing connections. Repair coating damage in accordance with Section 811.

810.07 MEASUREMENT. Quantities for bridge railing and hand railing will be the design quantities per linear foot as specified on the plans. Sections measured for payment include bridge railing, hand railing, transitions, and joints.

Quantities for roadway barriers and pier protection systems will be per linear foot as specified on the plans. Sections measured for payment include foundations, barriers, transitions, and joints.

Materials, excavation, backfill, and disposal of excess excavated material will not be measured for payment.

810.08 PAYMENT. Payment will be made at the contract unit price per linear foot, subject to the following provisions. Payment for concrete for bridge railing, roadway barrier, and pier protection systems will be subject to the pay requirements of Section 901 on a lot basis.

Payment includes all labor, materials, hardware, and equipment necessary to complete the work.

Payment will be made under:

Item No.	Pay Item	Pay Unit
810-01	Concrete Bridge Railing (Type)	Linear Foot
810-02	Metal Bridge Railing	Linear Foot
810-03	Concrete and Metal Bridge Railing	Linear Foot
810-04	Hand Railing	Linear Foot
810-05	Concrete Roadway Barrier (Type)	Linear Foot
810-06	Concrete Pier Protection System (Vehicle)	Linear Foot

Section 811
Painting and Protective Coatings

811.01 DESCRIPTION. Furnish cleaning, surface preparation, containment, collection, sampling and testing, storage and disposal of waste, and application of paints and other protective coatings for metals and other materials.

811.02 ACRONYMS AND ABBREVIATIONS.

AISC	American Institute of Steel Construction
ALARA	As Low as Reasonably Achievable
BADCT	Best Available Demonstrated Control Technology
CAS	Coating Application Specialist
CFR	United States Code of Federal Regulations
DFT	Dry Film Thickness
DIR	Daily Inspection Report
EPA	Environmental Protection Agency
HEPA	High Efficiency Particulate Air
LAC	Louisiana Administrative Code
MSDS	Material Safety Data Sheet
NACE	National Association of Corrosion Engineers
NTPEP	National Transportation Product Evaluation Program
NIOSH	National Institute for Occupational Safety and Health
PEL	Permissible Exposure Limits
QA	Quality Assurance
QC	Quality Control
QCS	Quality Control Supervisor
RCRA	Resource Conservation Recovery Act
SSPC	Society for Protective Coatings
TCLP	Toxicity Characteristics Leaching Procedure
TSP	Total Suspended Particulate

811.03 MATERIALS. Unless otherwise specified, use a Zinc Paint System from the Approved Materials List for painting new and existing metals to be painted. Provide organic zinc primer compatible with the inorganic zinc primer as a repair and stripe coat component; and provide an intermediate coat compatible with both the inorganic and organic zinc primers. The paint supplier will certify at the time of paint approval, the materials (primers &

intermediate coats) are compatible and will not affect the performance of the whole system as tested by NTPEP.

Show the paint system to be used on shop or working drawings. Use only one paint system from one manufacturer for the entire structure without modifications. Top coat colors shall be as defined in Table 811-1. When spot painting or zone painting existing metals, match existing top coat color.

Table 811-1
Top Coat Federal Color Number

Description	Federal Standard 595C
Black (Steel)	17038
Silver (Steel)	17178
Dark Bronze (Steel)	30040
Weathering (Steel)	30045
Khaki (Steel)	30372
Gray (Concrete)	36440
Gray (Steel)	36463

Provide coating systems with visibly contrasting color tint for each full coat and stripe coat.

Provide anti-skid surface, compatible with the paint system and recommended by the manufacturer unless otherwise specified, on stair treads, walkway surfaces, platforms, and landings.

Coating materials shall not be used until the Project Engineer has inspected the materials and each batch of paint has been tested by the DOTD Materials and Testing Section and accepted.

Paints	1008
Cold Tar Epoxy-Polyamide Paint	1008.04
Cold Galvanizing Repair Compound	1008.05
Maintenance Overcoating of Steel Bridges	1008.08

Abrasives: Use properly sized abrasives to achieve the required cleanliness and surface profile. Use abrasives meeting the requirements of *SSPC-AB1, Mineral and Slag Abrasives*; *SSPC-AB2, Cleanliness of Recycled Ferrous Metallic Abrasives*; or *SSPC-AB3, Newly Manufactured or Re-Manufactured Steel Abrasive*. Do not introduce any contamination that interferes with the coating application and performance, including chlorides and other salts.

For field applications, abrasives delivered to project site shall be new and conform to *SSPC-AB3*. Once used during the work, abrasives may be

recycled provided the resulting conductivity and cleanliness conform to *SSPC-AB2*. Select a sample from each recycling machine in use and conduct the water-soluble contaminant and oil content tests outlined in *SSPC-AB2* at least one time each week or more frequently, if directed. Conduct the non-abrasive residue and lead content tests as directed by the Project Engineer. If test results do not meet requirements, notify the Project Engineer immediately, remove and replace the abrasive, clean the recycling equipment, and conduct tests each day to confirm the equipment is functioning properly. Return to the weekly testing interval when directed.

Caulk: Unless otherwise specified, use caulks that are paintable, compatible with the coating system, and recommended by the coating manufacturer. Provide caulk conforming to Federal Specification *TT-S-00230 C, Type II, Class A.* For painted metalwork, use caulk colored to contrast the color of the intermediate and top coats. For unpainted and painted sections of weathering steel, use caulk colored to match the color of the weathered steel in accordance with Table 811-1.

Penetrating Sealer: Use low viscosity 100 percent solids un-pigmented epoxy recommended by the coating manufacturer.

Rust Preventative Compound: Use a Class 3 rust preventative compound meeting the requirements of Military Specification MIL-C-11796C, Corrosion Preventative Compound, Petrolatum, Hot-Applied.

Soluble Salts Test Kit: Use a soluble salts test kit in accordance with SSPC-Guide 15 utilizing Multi-Step Ion-Specific Methods. Ensure the test patch/cell or sleeve creates a sealed, encapsulated environment during ion extraction and is suitable for testing all structural steel surfaces. A Fully Automated Conductivity Measuring Technique may be allowed, subject to acceptance by the Project Engineer.

Thinners, Solvents, and Cleaners: Use thinners, solvents, and cleaners listed on the coating manufacturer's product data sheet. For overcoating systems, use thinners, solvents, and cleaners that do not damage the existing coating system or inhibit the performance of the newly applied coatings.

811.04 EQUIPMENT. Store equipment to prevent access to the structure by unauthorized personnel during non-work hours.

Provide containment equipment with air filtration systems with new unused filters, and purged of contaminants prior to delivery to the project site.

Prior to removal of equipment from the project site, remove air filtration filters and purge equipment of contaminants. Notify the Project Engineer prior to removal of equipment from project site.

811.04.1 Compressed Air: Use a compressed air system capable of delivering clean, dry, continuous nozzle pressure to achieve the required surface cleanliness and profile or spray pattern. The system shall comply with the instructions and recommendations of the manufacturer of the abrasive blasting system and coating application system.

811.04.2 Abrasive Blast System: Design the blasting system to produce the specified cleanliness and profile. For shop applications, centrifugal wheel blaster is allowed.

811.04.3 Coating Application System: Use the coating application equipment in accordance with the coating manufacturer's product data requirements.

811.04.4 Scaffolding and Containment Systems: Equip with rubber rollers or other protection to reduce damage to painted surfaces. No erection of containment or scaffolding equipment is allowed until acceptance of the containment systems submittal.

811.05 SUBMITTALS. Conform to Section 801.

Provide submittals as applicable to the specified work to be performed. Unless otherwise specified, provide submittals to the Project Engineer, and at least 30 calendar days before beginning work. Copy the Project Engineer on submittals directed elsewhere. Resubmittals shall be complete submittals and not partial of corrected items. Maintain a copy of all submittals on site throughout the duration of the contract.

811.05.1 Qualifications: Maintain certifications for the duration of the contract. If the certifications expire or become invalid, do not perform work until reissuance of certifications. Notify the Project Engineer of any change in certification status. Provide results of audits or investigations occurring during the contract duration to the Project Engineer within one day of receiving results. Delay in work due to non-conformance with this section will be at no additional cost or time to the Department.

Submit for record the following information as a minimum:

811.05.1.1 Shop: Submit AISC certification for shops performing cleaning and painting operations on existing steel.

811.05.1.2 Cleaning and Painting Contractor: Submit documentation showing the contractor performing field cleaning and painting work is certified by SSPC to the requirements of SSPC-QP1 and SSPC-QP2.

811.05.1.3 Blasters and Painters: For field work provide at least the minimum number of CAS required under SSPC-QP1 requirements.

811.05.1.4 Contractor's License and Certifications: For contractor licensing requirements comply with 102.02.

Upon receipt of apparent low bidder notification, provide to the Department's Project Control Section a current copy of the appropriate certifications from SSPC within 10 working days:

SSPC-QP1, Standard Procedure for Evaluating Qualifications of Painting Contractors (Field Application to Complex Structures).

SSPC-QP2, Standard Procedures for Evaluating the Qualifications of Painting Contractors to Remove Hazardous Paint, prior to Notice to Proceed.

811.05.1.5 Quality Control Inspectors for Field Work: Submit for record the name and qualifications of the personnel performing quality control. The Quality Control Supervisor shall be certified as a NACE CIP (Coating Inspector Program) Level 3 and have a minimum of three years of experience as a Quality Control Supervisor on bridge painting projects while certified. Additional inspectors shall report directly to the Quality Control Inspector and shall be certified as a NACE CIP (Coating Inspector Program) Level 1 or a SSPC BCI (Bridge Coating Inspector) Level 1 and have a minimum of two years of experience as a coating inspector on bridge painting projects while certified.

811.05.1.6 OSHA Competent Persons: Submit for review training documentation and certifications for the designated OSHA Competent Persons.

For field application involving lead paint removal, submit for review the designated primary and back-up Competent Persons responsible for the observation and monitoring of work activities and to oversee the implementation of the Compliance Plan, Environmental Protection Plan, Waste Handling Plan, and Containment performance. At a minimum, the designated Competent Persons shall have the SSPC C3 Supervisor/Competent Person Training for Deleading of Industrial Structures, any required SSPC C5 refresher courses, and have three years field experience in industrial lead paint removal. The designated primary Competent Person shall not be a member of the production crew (Superintendent, Forman, Quality Control Inspector, Blaster, Painter, etc.) and shall not have additional responsibilities that prevent the fulfillment of the responsibilities of the Competent Person. In the event the primary Competent Person is absent from the project site, the designated back-up Competent Person will be the acting Competent Person and perform the duties of the primary Competent Person. No hazardous waste generating, handling, storage, or disposal activities may be performed without the

presence of the designated primary or back-up Competent Persons on the project site to observe these activities.

811.05.2 Permits: Submit for review all required permits and applications.

811.05.3 Project Contacts: Submit for record the names and phone numbers of designated project personnel and emergency contacts.

811.05.4 Abrasive Materials: Submit for record the name of the abrasive manufacturer and specifications of the abrasives to be used. Provide abrasive sizes, along with supporting industry recommendations or previous project performance results, that selection will achieve the required cleanliness and surface profile. For shop application, submit to the Fabrication Inspector.

Provide certification that the abrasives meet the cleanliness criteria under 811.03.

811.05.5 Coating Application Method: Submit for review coatings and application methods.

811.05.6 Paint System Manufacturer Information: For each paint system, submit for review the following as a minimum.

Provide Material Safety Data Sheets (MSDS) and paint manufacturer's Product Data Sheet and Specifications including the following:

- Name of the company that manufactures the paint.
- Surface preparation recommendations or requirements.
- Allowable atmospheric conditions during which the coating shall be applied including ambient temperature, relative humidity, surface temperature, and dew point temperature.
- Specific mixing instructions.
- Thinner recommended and maximum thinning ratios to be used with each coating.
- Allowable application methods and instructions.
- Minimum and maximum dry film thickness per coat.
- Primer, intermediate, and finish coat pot life at the anticipated application temperatures.
- Minimum and maximum curing time between coats referenced to both atmospheric conditions and a confirming physical test for each coat.
- Ventilation requirements.
- Shelf life.
- Maximum recoat window.
- Manufacturer's recommendations for remediation of excessive or deficient DFT.

811.05.7 System Compatibility: For painting new and existing metals, submit for review to the Project Engineer selected products to be used on the project and any additional surface preparation requirements. Also, submit a letter from the coating manufacturer stating that surface treatment, water additives, coatings, penetrating sealer, caulking, and filler materials to be used are compatible and will not affect the performance of the whole system as tested by NTPEP.

For maintenance of existing coatings, submit for review to the Project Engineer a letter from the coating manufacturer stating that surface treatment, water additives, coatings, penetrating sealer, caulking, and filler materials to be used are compatible.

811.05.8 Quality Control Plan: Submit a Quality Control Plan including the following as a minimum:

811.05.8.1 Shop Preparation and Application: Submit for review a quality control plan that is to be followed on the project to the Department's Fabrication Inspector.

811.05.8.2 Field Preparation and Application: Submit for review a current Corporate Quality Control Plan conforming to SSPC-QP1, Standard Procedure for Evaluating Qualifications of Painting Contractors (Field Application to Complex Structures) and/or SSPC-QP2, Standard Procedure for Evaluating the Qualifications of Painting Contractors to Remove Hazardous Paint certifications as appropriate.

Submit for review a site specific Coating Quality Control Plan.

811.05.8.3 Protection of Adjacent Surfaces: Submit for record a quality control plan for the protection of adjacent surfaces from damage by direct or indirect blasting and coating operations, including, but not limited to, machinery, wire ropes, cables, electrical conduits and conductors, grating, platforms, galvanized metals, aluminum or machined surfaces, vehicles, and other surfaces that may be damaged.

Prevent blast media and dust contamination of mechanical systems, open gears, sheaves, wire ropes, seals, etc. Upon completion of blasting operations, clean these surfaces with approved solvents and re-grease to the satisfaction of the Project Engineer.

Submit proposed repair procedures for review and acceptance prior to remediation action if damage occurs.

811.05.8.4 Quality Control Documentation: Submit for record documentation specified in 811.06.5.2. Submit documentation for each production day by the end of the following business day**.**

811.05.9 Pollution Control and Monitoring Plan: For field cleaning or painting, submit as one document for review to the Project Engineer a written site specific compliance plan describing the means for complying with all federal, state, and local regulations including pollution control provisions specified herein. The written plan shall be in accordance with SSPC Project Design: Industrial Lead Paint Removal Handbook, Volume II, Phase 6; Environmental Monitoring.

Include at least the following components:

- Scaled map of the work site layout showing temporary waste storage areas, and staging areas.
- Ambient air and personnel sampling frequency.
- Site specific lead Health and Safety Plan (OSHA 29 CFR § 1926.62).
- Site specific Environmental Protection Plan.
- Waste water storage, sampling, treatment and disposal plan.
- Hazardous material and solid waste handling, storage, sampling, and recycling plan.
- Hazardous waste handling, storage, sampling, and disposal plan.
- Qualifications and certifications of the testing laboratory; hazardous waste transporter; and the storage, treatment and disposal facility.
- Reviewed and accepted Containment System Plan. Comply with Section 817.
- Plan for clean-up of soil and water contamination within the project limits.

811.05.10 Worker Protection Documentation: For field applications, submit for record, as one document, a Worker Protection Plan demonstrating the incorporation of appropriate safety procedures for all hazards on the job site, whether specifically identified herein or not. Demonstrate compliance with the following as a minimum:

NIOSH "National Institute for Occupational Safety and Health."

OSHA 29 CFR § 1910 *Occupational Safety and Health Standards.*

OSHA 29 CFR § 1926 *Safety and Health Regulations for Construction*.

40 CFR 117, *Determination of Reportable Quantities for Hazardous Substances NIOSH Method 7082; Lead*.

Working Over or Near Water [29 CFR § 106].

Submit records in accordance with 811.09.6.

811.05.11 Worker Training Information: For cleaning and painting existing steel, submit for record worker training information for OSHA Interim Final Rule on Lead Exposure in Construction training. Include trainer name, trainer qualifications, location and time of training, and outline of training program.

811.05.12 Cleaning and Painting Activity Schedule: For field application, submit for record a detailed plan of cleaning and painting work activities, including order of work, and a chart or scale demonstrating completion milestone dates. Update monthly and as directed**.**

811.05.13 Schedule of Work Segments and Activities for Payment: For field application of protective coatings, submit to the Project Engineer for review a proposed schedule of work dividing the structure into segments and activities identified for payment purposes. Include in the schedule at least the following information.

1. A diagram of the structure divided into segments of work areas. (e.g., Panel point to panel point, pier to pier, station to station, etc.) The lump sum bid item will be divided proportionally by the number of identified and accepted segments of work. When the execution of work requires the work to be performed in phases, further divide the segments into sub-segments for payment purposes.

2. A list of work activities within segments and sub-segments, including, but not limited to, erecting rigging and containment; cleaning, surface preparation, application of primer and stripe coat; application of intermediate coat; application of top coat; repairs and clean-up; and derigging and touch up. The accepted list of work activities will be divided proportionally for payment for work performed in each accepted segment or sub segment of work.

When cleaning and painting existing steel utilizing the three coat zinc paint system, unless otherwise specified, payment allocations within segments and sub-segments, broken down by completed activities, will be made as follows:

Erecting Rigging and Containment	20%
Cleaning, Surface Preparation, Application of Primer and Stripe Coat	40%
Application of Intermediate Coat	15%
Application of Top Coat	15%
Repairs, Clean up, De-rigging and Touch up	10%

When specified, provide a CPM (Critical Path Method) schedule.

811.05.14 Color Samples: For each paint system, submit for review three sets of samples for each coat and stripe coat color. Provide samples on

material similar to application and on minimum coupon size 3 inch x 6 inch. Do not deliver paint system materials to the job site until color sample submittal acceptance.

811.05.15 Paint System Samples: For each paint system and top coat color, after acceptance of color samples and before ordering of paint system materials, submit for review paint system application and liquid samples. When anti-skid is specified for the top coat, provide additional paint system samples containing the anti-skid additive applied to the top coat and the corresponding color to be used.

Provide paint system application samples on 0.25 inch thick by 8.5 inch wide by 11 inch long sheet of material similar to application and prepared as follows:

- Divide the sheet into four equal horizontal strips;
- Prime three strips starting from the bottom;
- Paint intermediate coat on the two bottom strips;
- Paint top coat on the bottom strip;
- Top strip to remain unpainted with blast profile exposed.
- Apply a 1-inch wide stripe coat centered over the line formed by the unpainted and the prime coat for half the plate width.
- Provide samples in accordance with the Materials Sampling Manual.

811.05.16 Maintenance of Traffic: Submit to the Project Engineer for review documentation demonstrating conformance to the plans. Include a description and schedule of activities affecting traffic. During construction, submit proposed changes in the documentation at least 14 calendar days prior to the implementation of the change.

Include as a minimum the following:

811.05.16.1 Roadways: Submit a description and schedule of proposed lane closures and reductions to clearances. Conform to Section 713.

811.05.16.2 Railways: Submit a description and schedule of proposed reductions to clearances and activities within the vicinity of tracks as specified by the railroad.

Submit Right of Entry and insurance documentation as required by the railroad. Conform to 107.08.

811.05.16.3 Waterways: Submit a description and schedule of proposed construction activities that will require equipment to occupy the waterway or affect clearances. Conform to 107.09.

General coordination with the U.S. Coast Guard will take place through the Project Engineer.

811.06 CLEANING AND PAINTING STRUCTURAL METALWORK.

Clean and paint metals in accordance with the plans and specifications. Do not paint surfaces where paint would interfere with welding or proper operation of movable metal parts.

Except for solvent or water jet cleaning, perform surface preparation work only when the temperature of the steel surface is at least 5°F above the dew point temperature. In the event that any rusting or contamination occurs after the completion of the surface preparation, prepare the surfaces again to the specified requirements.

Coat metal surfaces to be encased in concrete and top surfaces of steel girder top flanges to be in contact with concrete in regions of girders specified to be painted with a minimum of one coat of primer.

Where shear connectors are applied and primer has been removed, primer does not need to be reapplied provided at least 2 inches from the edge of flange is coated and repaired as needed.

Painting of aluminum or stainless steel surfaces will not be required, except where aluminum is placed against concrete.

When weathering steel is to be used for structural members, clean and paint portions specified to be painted in accordance with 807.06.2. Leave other areas unpainted. Conform to 811.06.4 for surface preparation.

When specified, paint galvanized or metallized surfaces of sheet metal, electrical conduit, and water, air and gas pipes that are exposed and visible. Do not paint other galvanized or metallized surfaces unless otherwise specified.

Prevent laps, sags, over spray patterns, and other undesirable characteristics.

Measure dry film thickness in accordance with SSPC-PA2.

Upon completion and request for acceptance of a section of the work, clean painted surfaces of any staining and repair any defective areas. The painted surfaces shall have a uniform appearance prior to acceptance.

811.06.1 Shop Painting:

811.06.1.1 Surfaces to be Painted: When fabrication and cleaning are completed, paint surfaces with one coat of primer before corrosion occurs. Where paint would be detrimental to field welding operations, the surface shall not be shop painted within a suitable distance from edges to be welded or spliced. Prepare shop and field contact (faying) surfaces in accordance with 807.05.2.4.

811.06.1.2 Erection Marks: Paint erection marks on surfaces with a compatible paint of contrasting color.

811.06.1.3 Inaccessible Surfaces: Apply the complete paint system prior to assembly or erection to surfaces not to be in contact, but which will be inaccessible after assembly or erection.

811.06.1.4 Machine Finished Surfaces: Apply an approved rust preventive compound to machine finished surfaces that mate or slide, or will not be coated immediately, as soon as practical after being accepted and before removal from the shop. Apply coatings to all other machined surfaces except mill-to-bear surfaces.

Paint surfaces of iron and steel castings which are machine finished for the purpose of removing scales, fins, blisters, or other surface deformations with the specified paint system.

811.06.1.5 Pins and Pin Holes: After fabrication, coat pins and pin holes with an approved protective coating.

Immediately prior to erection, remove the protective coating and apply a high-grade lubricant grease with non-corrosive properties to the bearing surfaces.

After erection, completely remove any corrosion, excess grease, and any other contaminants that would prevent adherence of paint. Coat the exposed surfaces of pins and pin assemblies with the specified paint system.

811.06.1.6 Loading: Do not load material for shipment until paint is dry and cured in accordance with 811.06.5.11.

811.06.2 Field Painting: Any damage to the structure or surrounding area resulting from the contractor's operations shall be repaired as directed by the Project Engineer, at no additional cost or time to the Department.

The contractor shall hold absolute responsibility and liability for damage to persons, property, vehicles, and the environment resulting from the execution of the work required by this contract.

For connections with galvanized fasteners, prepare fastener surfaces in accordance with 811.06.4 for surfaces that are specified to be painted. Clean surfaces and apply primer to the fastener assemblies and connection plates, overlapping at least 2 inches of undamaged primer.

Do not apply the field coat of paint to the steel work below the concrete deck level until the deck and concrete barrier railings have been completed and metalwork cleaned. Keep steel members clean by washing and removing any materials that adhere to the surface and mars the finish of the steel members. If concreting operations damage the paint, clean the surface and spot prime or paint as directed.

Provide, operate, and maintain at the site and to all portions of the project a powered hoist, lift or a temporary stairway to provide safe access to all work

areas for workers, inspection personnel and the engineer. Any temporary structures, equipment or devices used for access from the ground to the bridge structure shall be secured to prevent unauthorized use or trespass on the bridge structure.

811.06.3 Delivery, Storage and Handling: Deliver materials to the job site in original, undamaged, and unopened containers. Clearly indicate the name and address of manufacturer, manufacturer's brand name, trade name or trademark, color batch number, date of manufacture, shelf life, and special directions on each container. If the material dating is in code, provide the Project Engineer the key to interpret the code.

Store materials in enclosed, power-ventilated structures that provide protection from weather and do not exceed manufacturer's recommended storage temperatures. Use a continuous recording thermometer to measure and document material storage temperatures. Store flammable materials in accordance with federal, state, and local regulations.

Containers of paint shall remain unopened until required for use. Labeled information shall be legible and checked at the time of use. Use the oldest paint of each kind first.

Immediately remove materials from the job site that are damaged, rejected, deteriorated, or that have exceeded specified shelf life or storage temperatures.

811.06.4 Surface Preparation: Existing coating systems may contain lead and other heavy metals. Existing surface profile is unknown and may or may not contain mill scale. Actual conditions across the structure may vary. Verify existing condition prior to bid in accordance with 102.06.

Surface preparation shall be in accordance with the plans, specifications and Table 811-2.

Table 811-2
SSPC Abrasive and Surface Preparation Standards

Designation	Definition
SP1	SSPC-SP1, Solvent Cleaning
SP2	SSPC-SP2, Hand Tool Cleaning
SP3	SSPC-SP3, Power Tool Cleaning
SP6	SSPC-SP6/NACE No. 3, Commercial Blast Cleaning
SP7	SSPC-SP7/NACE No. 4, Brush Off Blast Cleaning
SP10	SSPC-SP10/NACE No. 2, Near-White Blast Cleaning
SP11	SSPC-SP11, Power Tool Cleaning to Bare Metal
SP15	SSPC-SP15, Commercial Grade Power Tool Cleaning
SP16	SSPC-SP16, Brush-Off Blast Cleaning of Non-Ferrous Metals
SP WJ-1	SSPC-SP WJ-1/NACE WJ-1, Waterjet Cleaning of Metals - Clean to Bare Substrate
SP WJ-2	SSPC-SP WJ-2/NACE WJ-2, Waterjet Cleaning of Metals - Very Thorough Cleaning
SP WJ-3	SSPC-SP WJ-3/NACE WJ-3, Waterjet Cleaning of Metals - Thorough Cleaning
SP WJ-4	SSPC-SP WJ-4/NACE WJ-4, Waterjet Cleaning of Metals - Light Cleaning
VIS-1	Guide and Reference Photographs for Steel Surfaces Prepared by Dry Abrasive Blast Cleaning
VIS-2	Standard Method of Evaluating Degree of Rusting on Painted Steel Surfaces
VIS-3	Guide Reference Photographs for Steel Surfaces Prepared by Hand and Power Tool Cleaning
VIS-4 / NACE VIS-7	Guide and Reference Photographs for Steel Surfaces Prepared by Waterjetting
VIS-5 / NACE VIS-9	Guide and Reference Photographs for Steel Surfaces Prepared by Wet Abrasive Blast Cleaning

Unless specified to be painted, galvanized, metallized, aluminum, or stainless steel metal elements of the structure, such as decorative lighting metalwork, utility conduits, roadway lights, and all non-metallic conduits and cables, shall be covered or protected and will not require cleaning. Do not blast non-metallic conduits, fittings, conductors, and cables on or around the

bridge. Electrical conductors and fixtures may be de-energized for the blasting or painting operation upon request. Disconnection time will be as negotiated with the utility company or as specified on the plans. Unless otherwise specified, costs associated with de-energizing and protection of electrical conductors will be included in this item. Replace in their entirety any conduit, fitting, conductor, and cable damaged by cleaning operations at no additional cost or time to the Department. Employ a lock out, tag out protocol at the various electrical disconnect switches.

For stainless steel or metallized surfaces specified to be painted, brush off-blast clean to SP16. For existing galvanized steel specified to be painted, prepare surfaces in accordance with ASTM D6386 and brush off-blast clean to SP16. For new galvanized steel specified to be painted, comply with 811.08.1.1.

Prepare shop and field contact (faying) surfaces in accordance with 807.05.2.4.

811.06.4.1 Mechanical Removal of Surface Defects: Remove all fins, tears, slivers, and burrs, and grind flat. Smooth sharp edges, corners, and flame cut surfaces and grind to a minimum 1/16-inch chamfer to achieve the required edge surface for coating. Remove weld slag and weld spatter. Conform to AASHTO/NSBA, *Steel Bridge Collaboration S 8.1 Section 5.1*.

811.06.4.2 Soluble Salts Detection and Removal: Unless not required by the plans, determine the chloride, ferrous, sulfate, and nitrate concentrations on steel surfaces using soluble salts test kits meeting the requirements of 811.03, "Soluble Salts Test Kit." Perform the tests after washing and prior to blasting. Additional testing may be specified on the plans. Measure the concentration levels using Multi-Step Ion-Specific Methods described in *SSPC Guide 15, Field Methods for Retrieval and Analysis of Soluble Salts on Steel and Other Nonporous Substrates*. Test three random locations in the first 1000 square feet and one random location for each subsequent 1000 square feet.

Ensure the non-visible surface contaminant concentration on surfaces prior to blasting do not exceed 7 μg per square centimeter for chloride ions, 10 μg per square centimeter for ferrous ions, 17 μg per square centimeter for sulfate ions, and 10 μg per square centimeter for nitrate ions.

When utilizing a Fully Automated Conductivity Measuring Technique, surface conductivity measurements of non-visible surface contaminant concentrations on surfaces prior to blast-cleaning do not exceed 70 micro-Siemens per centimeter.

When contamination exceeds specified levels, rewash the entire surface area and retest. If additional washing does not reduce the contamination to below specified levels, a surface treatment or water additive may be used. Use a surface treatment or water additive that is approved by the coating system supplier and the Project Engineer.

Additional testing, rewashing, treatment, additives, or cleaning contaminated surfaces and repainting will be at no additional cost or time to the Department.

811.06.4.3 Cleaning New Steel: Prepare surfaces for prime coating new steel in accordance with SP10.

811.06.4.4 Cleaning and Preparing Existing Steel and Existing Coatings: Prepare surfaces for prime coating steel or damaged areas of newly erected steel in accordance with SP10 or SP11.

Remove pack rust prior to solvent cleaning. Prior to blast cleaning, clean oil and extraneous materials from surfaces to be coated to an SP1 level. Notify the Project Engineer immediately when any structural steel appears to be defective.

When overcoating existing coatings, or when removing and replacing all or portions of an existing coating, clean, wash, test, and remove soluble salts. Clean using abrasive blast, hand tool, or power tool method to remove corrosion and specified limits of existing coatings. Feather back edges of existing coating to remain a minimum of 3 inches around the perimeter of existing coating removed to provide a smooth transition. Verify edges of existing coating are intact by probing with a dull putty knife in accordance with SP2.

Provide surfaces to be coated which are clean, dry, and free from oil, grease, dirt, dust, soluble salts, corrosion, peeling coating, caulk, weld spatter, mill scale, and any other surface contaminants. Prepare steel and coating surfaces to meet cleanliness and surface profile requirements as specified on the plans. Roughen previously applied coatings to be overcoated in accordance with coating manufacturer's recommendations for development of proper inter-coat adhesion.

Protect adjacent surfaces in accordance with 811.05.8.3.

Sequence the surface preparations and coating operations so freshly applied coatings will not be contaminated by dust or foreign matter.

811.06.4.5 Washing: Wash existing coated surfaces using water and pressure to meet the requirements of SSPC-SP WJ-4 LPWC (3,500 to 5,000 psi) prior to abrasive blasting. Wash existing coated surfaces that are to be overcoated using water and pressure to meet the requirements of SSPC-SP

WJ-4 HPWC (5,000-10,000 psi). Provide surfaces meeting 811.06.4.2 requirements. Surface treatment or water additives to reduce soluble salt concentrations are allowable, with the approval of the coating system manufacturer.

Contain the resulting pressure-wash water in accordance with SSPC Guide 6 Class 2W. All wash water, regardless of removal method, shall be presumed to be hazardous until determined to be non-hazardous by testing. Submit wash water test results to the Project Engineer for record prior to water disposal. Dispose of pressure-wash water in accordance with all State and Federal regulations.

For new steel erected in the field, wash primed steel surfaces to SSPC-SP WJ-4 LPWC (3,500 to 5,000 psi) prior to stripe coat and intermediate coat application.

811.06.4.6 Abrasive Blast Cleaning: Prepare metal surfaces, as indicated on the plans and in the specifications. Unless otherwise specified, prepare metal surfaces to be painted by abrasive blast cleaning to SP10 level. Use VIS-1 that corresponds to the initial rust condition to judge acceptable cleanliness, but the written requirements take precedence in acceptance.

Perform abrasive blasting operation during daylight hours. Night-time abrasive blasting will be allowed if an external light plan is submitted to the Project Engineer for review and accepted. Provide external lighting that allows for effective environmental monitoring.

Other means and methods under this section, such as mechanical means or specialized equipment, to clean the surface to contract requirements may be allowed if, after review by the Project Engineer, the equipment does not damage the structure. After abrasive blast cleaning, ensure the surface profile meets the specification limits of 1.5 mils to 3.0 mils for new steel and of 1.5 mils to 3.5 mils for existing steel. Coating manufacturer allowable limits different than these values shall not be substituted. Determine the surface profile using "X-Coarse Press-O-Film" replica tape in accordance with ASTM D4417, *Standard Test Methods for Field Measurement of Surface profile of Blast Cleaned Steel, Method C*.

If the profile falls between 1.5 mils and 2.0 mils, average one test with "Coarse" and one test with "X-Coarse" to obtain a reading.

For Quality Assurance, the specified sufficient number of locations to characterize the surface in ASTM D4417 section 6.3.5 will be defined as three random tape samples in the first 1000 square feet of surface area and one additional random tape sample for each subsequent 1000 square feet of surface area in a work area. A work area will be defined as the area cleaned

during the same shift using the same blast equipment and abrasive, represented by all the samples taken in that area. Any changes made to personnel, blast equipment, or abrasive will result in establishing a new work area.

On the first day of abrasive blasting operation, blast two metal panels to the specifications. The metal panels shall be ASTM A709 Grade 36 and measure 0.25 inch by 8.5 inch by 11 inch, which the contractor and engineer shall date and initial. Coat one panel with a clear, non-yellowing finish as a visual example and use the uncoated panel to calibrate the dry film thickness gauges used on the project. Wrap panels in corrosion inhibitive paper and keep in a clean, dry area. Use panels as a comparison standard throughout the project.

Upon initiation of abrasive blasting operation on structures containing pack rust areas, blast clean to an acceptable level at least one representative area of pack rust selected by the Project Engineer that is easily accessed. Coat the area with a clear, non-yellowing finish. Use as a visual comparison standard throughout the project.

On the first day of abrasive blasting operation, blast the structure for no more than 15 minutes, blow down the prepared surface, and perform three surface profile tape tests in the presence of the QA inspector. If the average surface profile does not fall within specifications, adjust means and methods (grit size, pressure, standoff distance, nozzle angle, etc.). Perform further 15-minute maximum blasting, cleaning, and testing until the surface profile is within specifications, at which time the contractor will be allowed to proceed with full production blast cleaning. Rework any area that does not meet specifications until it meets the requirements of the contract.

Schedule cleaning and painting so surfaces to be coated are completely free of any contaminant prior to coating. Remove all abrasive, dust, and paint residue from steel surfaces and any scaffolding, staging, or support steel above the area with a commercial grade HEPA filtered vacuum cleaner equipped with a brush type cleaning tool, or by double blowing. If using the double blowing method, complete all blow-down operations within the contained area and then vacuum all exposed top surfaces of structural steel (flanges, longitudinal stiffeners, splice plates, hangers, etc.). Test all horizontal prepared surfaces for cleanliness prior to coating by simply wiping the surface with a finger; any accumulation requires re-cleaning. If prime coat is not applied within eight hours after the surface has been approved for coating application, the surface will require an additional QA inspection.

The QC Inspector shall verify compliance with applicable specifications and conduct required testing prior to notifying the Project Engineer that work area surfaces are ready for primer application.

The QA Inspector will conduct surface profile readings in accordance with ASTM D4417 Method C and the contract. The work area will be divided up and tape readings will be taken. All cleaned structural members in the work area shall be represented in the random sampling (truss post, chord, and diagonals, beam flanges and webs, diaphragms, cross-frames, etc.). If the averages of all the QA readings fall within contract specification, the area is compliant and may be primed. If the average of all the QA readings falls outside of the contract limits and the cause is from more than one sample location, the work area is non-compliant and cannot be primed. If the average of all the QA readings falls outside of the contract limits and the cause can be attributed to one location, then the QC Inspector will be notified of the non-compliant work, will be requested to accompany the QA Inspector on a second sampling of the identified area, and will witness the sampling. The secondary sampling will consist of three individual tape readings taken at the initial out-of-compliant location within a 1-square-foot area. Substitute the average of the three secondary readings for the initial out-of-compliant location sample in calculating a new overall average of the work area. If the new average for the work area falls within the contract requirements, the area is compliant and may be primed. If the new average does not fall within the contract requirements, the work area is non-compliant and shall not be primed. Re-work and re-test all work areas that are non-compliant until they fall within specifications.

Primer applied to non-compliant work areas will result in reporting the activity to the QCS, notifying the Project Engineer, documenting in the DIR, and reworking of the area until surface is compliant.

Perform abrasive blast cleaning within a containment system and confine all particulates.

811.06.5 Application: Apply a complete coating system to all metal surfaces specified to be coated. Apply coatings in accordance with the manufacturer's recommendations, SSPC-PA1 *Paint Application Specification No. 1* and the contract.

Prior to the application of prime coat, inspect the substrate for contamination and defects, and prepare the surface in accordance with 811.06.4. For new steel, the Department's Fabrication Inspector will perform the QA required at the shop. For existing steel, provide the Project Engineer with passing QC documentation for cleanliness and surface profile.

Permit the Project Engineer to inspect the substrate to verify proper cleanliness and surface profile. Apply prime coat after acceptance of the surface preparation by the Project Engineer.

Prior to the application of each subsequent coat, inspect the coating for contamination and defects. Provide the Project Engineer with passing QC documentation, including DFT readings conforming to SSPC-PA2. Permit the Project Engineer to inspect the coating and verify proper surface preparation and dry film thickness. Apply subsequent coat after acceptance of the previous coat by the Project Engineer.

Application of coats without the Project Engineer's acceptance of the underlying surface or previous coat will be considered non-compliant work.

Apply each coat, including a stripe coat, in a color that contrasts with the substrate or preceding coat.

Provide a finished surface free from foreign contaminants, grease, stains, dry spray, overspray, runs, sags, drips, excessive paint build up, ridges, waves, laps, streaks, brush marks, blisters, bubbles, craters, mud cracking, holidays, and variations in color, texture, and finish (glossy or dull). Apply coating so each coat has complete coverage (including corners and crevices), has a film of uniform thickness, and bonds to the underlying surface.

811.06.5.1 Paint Systems for New Steel and Cleaned Existing Steel: Apply each coat of paint with airless or conventional spray equipment in a fine, even spray. If thinning of paint is allowed, thin in accordance with the paint manufacturer's recommendations, but in no case exceed 10 percent. On surfaces inaccessible to spray equipment, paint shall be applied with brush or approved daubers to ensure coverage.

When a zinc paint system is specified, apply an inorganic zinc for shop priming, an organic zinc for field priming on non-faying surfaces, and an organic zinc for stripe coating. Prime faying surfaces in accordance with 807.05.2.4.

Unless otherwise specified, apply intermediate coat and topcoat paint for new steel after field erection.

Base dry-to-handle curing time on the temperature and relative humidity requirements of the manufacturer's product data sheet curing schedule. Provide 72 hours curing time before shipping.

811.06.5.2 Quality Control and Quality Assurance (QC/QA): The painting contractor is responsible for QC regardless of the fact that the Department, the Project Engineer, or their representatives may be present. The Project Engineer will perform QA inspection.

The QC Inspector shall, at a minimum, perform the following tests and record the resulting information in accordance with the referenced procedures and frequency for all cleaning and painting operations unless otherwise specified:

- Relative humidity readings outside the containment prior to initial blasting and every 2 hours thereafter; readings inside the containment prior to and every 2 hours during painting.
- Temperature readings of air near but outside the containment prior to initial blasting and every 2 hours thereafter; readings of air and steel inside the containment prior to and every 2 hours during painting.
- Daily surface profile measurements, as per ASTM D4417 Method C, before coating.
- Daily blotter test results, as per ASTM D4285, prior to blasting during field operations.
- Daily dry film thickness measurements, as per SSPC-PA2, after each coat of paint has dried.
- Daily air movement measurements inside containment before blasting for field operations. Acceptance criteria per ventilation requirements in the plan notes and accepted contractor containment plan.
- Wind speed and direction daily every 2 hours. Take readings near members being coated.
- For the initial section of work, inspections by the Project Engineer, contractor, and lead coating inspector will take place for each phase described in 811.05.12 upon completion of each respective phase. Request in writing to the Project Engineer to schedule these inspections.

811.06.5.3 Weather and Temperature Limitations: Do not spray coatings when the measured wind speed in the immediate coating area is above 15 miles per hour. Do not apply coatings when contamination from rainfall is imminent or when the ambient air temperature, relative humidity, dew point temperature, or temperature of the steel is outside limits provided on the coating manufacturer's product data sheet and these specifications.

Protect the cleaning and painting area of the structure from environmental conditions during and after the coatings application. Rework any coating which has been adversely affected by the environmental conditions.

If utilizing fans, heaters, ventilators, or other equipment to achieve acceptable environmental conditions for coating applications, maintain those conditions until coating reaches a dry-to-touch condition and as recommended by the coatings manufacturer. Provide a time lapse recording instrument for monitoring all controlled conditions during this period.

During application, coatings shall be between 40°F and 100°F and according to the manufacturer. Do not apply paint unless the surface temperature of the metal is at least 45°F and rising, and not in excess of 120°F and according to the manufacturer.

Do not apply coatings to wet or damp surfaces, during rain, snow, fog, or misty conditions, or when the steel surface temperature is less than 5°F above the dew point.

Do not apply coatings when the relative humidity exceeds 85 percent and according to the manufacturer. Maintain temperature and humidity limits from before commencement of painting to the time of dry-to-touch.

811.06.5.4 Penetrating Sealer: If required by the plans, apply to all locations where irremovable crevice corrosion remains after all surface preparation best efforts have been made, as determined by the Project Engineer. Apply penetrating sealer to crevice corrosion and allow curing in accordance with the manufacturer's recommendation prior to applying subsequent coatings.

811.06.5.5 Stripe Coat: Stripe coat is a separate coat and operation, and is applied to welds, corners, edges, crevices, seams, fastener assemblies, and rough or pitted surfaces.

For shop applied primer, apply stripe coat in the field after erection.

For existing steel, apply coatings and penetrating sealer in the following sequence.

Apply full prime coat to all areas except where penetrating sealer will be applied.

Apply penetrating sealer.

Apply stripe coat.

Extend stripe coat a minimum of 1-inch beyond the edge, seam, fastener assembly, etc. In general, use brush or dauber to apply stripe coat and work into crevices and uncoated areas. For continuous uninterrupted edges (not lattice or built-up members), apply stripe coat by spray or rollers.

Stripe coating procedures are subject to acceptance by the Project Engineer.

811.06.5.6 Caulking: For painted steel, apply caulk between applications of intermediate coat and top coat. When a two coat paint system

is used, caulk between application of primer coat and top coat. For unpainted weathering steel, field clean surfaces to receive caulk and apply caulk as soon as possible after cleaning. Prepare surfaces and apply caulking in accordance with caulk manufacturer's recommendations.

Use caulk to seal the perimeter of all faying surfaces, cracks, crevices, joints, gaps less than 1/2 inch, and skip-welded joints. For gaps 1/2 inch or greater, treat in accordance with the plans. Apply caulking bead with a smooth uniform finish and cure according to the caulk manufacturer's recommendations.

811.06.5.7 Protection of Surfaces: Protect surfaces and working mechanisms not intended to be coated during application of coatings. Clean surfaces that have been contaminated with coatings or other substances until all traces of the coating or substance have been removed. If contaminated surfaces were lubricated, solvent clean to remove contaminants and lubricant, and re-lubricate as directed by the Project Engineer. Do not allow material from cleaning and coating operations to be dispersed outside the intended work area. Remove and repair, to the satisfaction of the Department as a condition of Final Acceptance, all contamination, scratches, marks, stains, and other effects to the work introduced by cleaning and painting, including the installation and removal of temporary works, which are deemed unacceptable by the Department.

811.06.5.8 Mixing and Thinning: Mix all coatings in accordance with the manufacturer's product data sheet. Only mix complete kits. Use thinners and solvents in accordance with the requirements of the coating manufacturer's product data sheet. Perform all mixing operations over an impervious surface with provisions to prevent runoff of any spilled material.

811.06.5.9 Application Methods: Use coating application equipment to apply coatings per coating manufacturer's product data sheet. Application with brushes is acceptable for minor touchup of spray applications, stripe coats, or when otherwise approved by the Project Engineer. Adjust spray equipment to produce an even, wet coat with minimum overspray. Apply coatings in even, parallel passes, overlapping 50 percent. Agitate coatings during application as required by the coating manufacturer's product data sheet to provide uniform consistency.

Touch up missed or damaged locations after a coat dries and before applying succeeding coats.

Strictly abide by the manufacturer's specified recoat period. Apply no paint until the preceding coat has met the recoat criteria and has been both

tested and accepted by the Project Engineer. Where conditions require recoat after the specified recoat period, employ the manufacturer's recommended remedial procedures. Any coating removed during this process shall be replaced prior to applying additional coats. Protect adjacent surfaces already properly coated.

811.06.5.10 Thickness and Completeness of Coats: Apply coatings to the DFT as identified in the AML for the paint system selected and at least the number of coats specified. When required, apply penetrating sealer to the amount specified by the manufacturer and accepted by the Project Engineer.

After application of each coat, thoroughly inspect the surfaces for completeness of coat and measure the DFT in accordance with SSPC-PA2. When the DFT does not meet specifications, repair in accordance with the manufacturer's recommendations. Retest the repaired areas and remediate as required to the satisfaction of the Project Engineer.

811.06.5.11 Coating, Drying, and Curing: Apply coatings within the time specified by the coating manufacturer's product data sheet for drying and recoating.

Before handling the coated member, test for cure in accordance with the manufacturer's recommended method.

811.06.5.12 Coating Finish: Protect the surface from contamination and disfigurement by construction activities. All marred painted surfaces are considered damaged areas and require repair.

811.06.5.13 Touchup and Repair: Repair all damaged or defective coatings prior to application of subsequent coatings. Repair with materials and to a condition equal to that of the coating system specified. Repair all dry spray by removing underlying coat and repair to meet original requirements. Protect adjacent coated surfaces and leave in place until the paint film has properly dried. Do not handle, work on, or disturb items which have been coated until the paint coat completely dries and hardens.

Repair any damaged, unclean, or uncoated surface with a written repair procedure approved by the coating manufacturer and accepted by the Project Engineer.

811.06.6 Stenciling: After production painting is complete, stencil the date of completion in MM/YYYY format, coating manufacturer, and type of paint system applied to each structure painted in the project. Place stenciled information on a painted exterior steel superstructure surface approximately 10 feet from each side and each of end of the structure and visible in profile view at specific locations determined by the Project Engineer. Provide $2^1/_2$ -

inch high block letters using paint that forms a contrast with the background and is compatible with the paint system used.

811.07 CLEANING AND PAINTING OTHER ITEMS.

811.07.1 Permanent Sheet, Pipe, and H-Piles: Prepare the substrate in accordance with 811.06.4. Provide a surface profile in accordance with the manufacturer's product data sheet, but in no case less than 2.5 mils. Re-blast piles not coated within eight hours of blasting or if the surface to be coated no longer meets the requirements of SP10.

Unless otherwise specified, apply coal tar epoxy-polyamide paint system. Apply paint system to sides of piles from the top of the piles to a depth of ten feet below the lowest of the design ground surface or the design scour depth, except no coating is required on the interior of pipe piles.

Apply the paint system in accordance with the following:

Apply in two coats. The time interval between the first coat and the second coat shall be in accordance with the coating manufacturer's published specifications. Apply the first coat to yield a DFT of 8 to 10 mils. Apply the second coat to yield a total DFT of the two coats between 16 and 20 mils.

After coating applications, the Project Engineer will observe the contractor's inspection of the surfaces and make film thickness measurements at the approximate rate of one for each 25 square feet of area unless deficient thickness is found. In that case, the rate of sub-measurements will be increased as required to determine the extent of the deficient area. Test and remediate in accordance with 811.06.5.10 and 811.06.5.13.

Cure coating in accordance with 811.06.5.11. Do not handle until coating is cured.

811.07.2 Aluminum: Aluminum surfaces placed in contact with or fastened to non-galvanized steel members are to be thoroughly coated with an accepted aluminum impregnated caulking compound. Paint aluminum surfaces in contact with concrete with a heavy coat of alkaline resistant bituminous paint or a coat of zinc chromate paint and allow drying before placing.

811.07.3 Lumber and Timber: Satisfactorily clean and paint lumber and timber requiring painting with three coats of the specified paint. If not specified, use the paint selected by the Project Engineer. Process treated timber to be painted in accordance with Section 1014.

811.07.4 Machinery: Clean machinery surfaces specified to be painted using full containment and prepare surfaces in accordance with 811.06.4.

Prepare flexible couplings, reducers, bearings, electric motors, brakes, limit switches, and equipment with shaft seals, in accordance with SP1, SP2, and VIS 1. Contamination or abrasive blasting of these items will require remediation that may include disassembly and cleaning, replacement of seals, and/or replacement of equipment, all at no additional time or cost to the Department.

Hand-abrade surfaces having baked on enamel in accordance with paint system manufacturer recommendations. Prepare other machinery components in accordance with SP10 or SP11, and VIS-1.

Provide glossy finish on machinery top coat. Provide top coat color to match Federal Safety Orange on rotating shafts, couplings, and open gearing.

811.08 GALVANIZING AND METALLIZING METAL PARTS AND SURFACES

811.08.1 Galvanizing: The following criteria shall be properly controlled and shall meet standards that are satisfactory for the galvanizing process.

- Defects arising from fabrication.
- Thickness and uniformity of coating.
- Adherence of coating.
- Appearance.
- Embrittlement.

Handle, stack, transport, and erect galvanized parts to protect the coating and its appearance.

Assemble galvanized parts with nonabrasive equipment. Galvanize after fabrication of hardware. Galvanize components of bolted assemblies separately before assembly.

Satisfactorily plug galvanizing drip holes in handrails and as directed.

Comply with ASTM A123 for galvanizing by the hot-dip process iron and steel products both un-fabricated and fabricated from rolled, pressed, and forged steel shapes, plates, bars, and strips greater than or equal to $^{1}/_{8}$-inch thickness. Galvanize after fabrication into the largest practical sections. Fabrication includes all operations such as shearing, cutting, punching, forming, drilling, milling, bending, welding, and riveting. When it is necessary to straighten sections after galvanizing, perform such work without damage to the zinc coating.

Unless otherwise specified, comply with ASTM A153 for galvanizing of iron and steel hardware or accomplish by an approved mechanical galvanizing method complying with ASTM B695 that provides the same thickness of coating.

Comply with ASTM F2329 for galvanizing by the hot-dip process carbon and alloy steel bolts, screws, washers, nuts, special threaded fasteners, and anchor bolts.

ASTM A490 bolts shall not be galvanized. When ASTM A490 bolts are specified to connect galvanized parts, use coated bolts to prevent electrolytic action.

Comply with ASTM A780 for the repair of galvanized surfaces. Use zinc-based solders or sprayed zinc to repair damaged galvanized surfaces deemed visible to the public by the Project Engineer. Other damaged galvanized surfaces may be repaired using brush applied paints containing zinc dust.

The galvanizer shall utilize all of the options available to prevent "white rust" from occurring. However, should "white rust" occur and, in the opinion of the Project Engineer, it is excessive or unsightly, it shall be cause for rejection. Should rejection of the product occur, the galvanizer or contractor must submit a repair procedure to the Project Engineer for review prior to implementing corrective action.

811.08.1.1 Galvanized Surfaces to be Painted

Detail galvanized surfaces to be painted on shop drawings. Notify the galvanizer prior to galvanizing these surfaces. Comply with ASTM D6386 for preparation of surfaces to be painted after galvanizing. Do not apply water quench treatment, chromate conversion coating treatment, wash primer surface preparation or acrylic passivation surface treatment.

811.08.2 Metallizing: Comply with Joint Standard SSPC-CS 23.00/AWS C2.23M/NACE No. 12 "Specification for the Application of Thermal Spray Coatings (Metallizing) of Aluminum, Zinc, and Their Alloys and Composites for the Corrosion Protection of Steel" and specific requirements of the plans. Coating thickness shall be a minimum of 10 mils. Unless otherwise specified, provide thermal spray coating composed of 85 percent aluminum and 15 percent zinc. Perform tensile bond tests prior to sealing. Perform bend tests on coupons containing thermal spray coating with no sealer applied. Apply seal coat as soon as possible, but not later than 8 hours after application of thermal spray coating.

811.09 PROTECTION OF THE ENVIRONMENT, PUBLIC, AND WORKERS. Comply with submitted and accepted plans and programs to protect the environment, public, employees, and other workers from toxic exposure to heavy metals, as well as releases and emissions of hazardous materials and nuisance dusts. Conduct all coating removal and application operations in accordance with all applicable federal, state, and local laws, rules, regulations, and ordinances, including, but not limited to, CFR, EPA, OSHA, and DEQ.

Comply with submitted and accepted contingency plan for the remediation of water and land in the event of contamination by solid or liquid paint and contaminated water.

Comply with submitted and accepted procedures to prevent and protect the public (persons and property) from paint damage. Comply with submitted and accepted remediation plan for damage.

The contractor is responsible for compliance with rules and regulations including all permits and their requirements.

811.09.1 Environmental Protection: Comply with the following as a minimum:

- 40 CFR § 50, *National Primary and Secondary Ambient Air Quality Standards*
- 40 CFR § 60, *Standards for Performance for New Stationary Sources,* Appendix A, *Test Methods*
- 40 CFR § 261, *Identification and Listing of Hazardous Waste*
- 40 CFR § 262, *Standards Applicable to Generators of Hazardous Waste*
- 40 CFR § 263, *Standards Applicable to Transportation of Hazardous Waste*

- 40 CFR § 264, *Standards for Owners and Operators of Hazardous Waste Treatment, Storage, and Disposal Facilities*
- 40 CFR § 268, *Land Disposal Restrictions*
- EPA SW-846, *Test Methods for Evaluating Solid Waste-Physical/Chemical Methods*
- Louisiana Revised Statutes La. R.S. 30:2001, *et seq.*, Louisiana Environmental Quality Act and enabling regulations found in Louisiana's Environmental Regulatory Code (most recent edition), particularly:
- Louisiana Administrative Code LAC 33:IX.101 *et seq.*, Water Quality Regulations.
- LAC 33:V.101 *et seq.*, Hazardous Waste and Hazardous Materials.
- LAC 33:III.101 *et seq.*, Air Quality Regulations.
- La. R.S. 49:214.21 *et seq.*, State and Local Coastal Resources Management Act of 1978, and enabling regulations found in the LAC LAC 43:I.701, *et seq.*, Coastal Management.

811.09.2 Pollution Control: Maintain a working knowledge and staff experienced in conforming with, monitoring, and adjusting to the following referenced industry guidelines for pollution control:

SSPC Guide 6, *Guide for Containing Debris Generated During Paint Removal Operations,* as published by The Society of Protective Coatings (SSPC).

SSPC Guide 7, *Guide for Disposal of Lead-Contaminated Surface Preparation Debris,* as published by SSPC.

Immediately cease all operations in the event a violation of any environmental regulation or when failure to properly execute any pollution control provisions occurs. Resume operations after written proposed corrective procedures have been submitted to and approved by the Project Engineer and implemented.

811.09.3 Permits: Seek permit determination from regulatory agencies to avoid any potential permit non-compliance issues during work activities.

811.09.4 Ambient Air Quality Compliance and Protection of the Air:

811.09.4.1 Visible Emissions: Assess the visible emissions using *EPA Method 22, Timing of Emissions* as defined by 40 CFR § 60, Appendix A, *Standards of Performance for New Stationary Sources*. During abrasive blasting, do not allow visible emissions from a containment to exceed a random cumulative duration of more than one percent of the work day (SSPC Guide 6, *Level 1 Emissions*). A work day shall be defined for purposes

of visible emission assessment as an 8-hour day. This amounts to a cumulative emission duration limit of 4.8 minutes per work day. Emissions occurring in any one hour of any work day that cumulatively exceeds 36 seconds shall be cause for immediate suspension of cleaning work and modification or adjustment of the containment system to eliminate the source of emissions prior to resuming cleaning operations.

For quality assurance, visible assessments will be conducted by an independent third party environmental testing firm under separate contract with the Department. These visible assessments of emissions may be used to indicate the need for immediate changes in containment or work practice.

During pressurized water cleaning, do not allow visible emissions from a containment to exceed a random cumulative duration of more than 10 percent of the work day (SSPC Guide 6, *Level 3 Emissions*).

811.09.4.2 Visual Accumulation: Conduct all activities so that paint, solvents, fuel, waste, abrasives, dust, lead contaminated materials, debris, etc. are not released or spilled onto the pavement, soil, water, sediment, or into the air or storm sewers.

Visual accumulation on the bridge deck, ground, or any other surface outside the constructed containment, as determined by the Project Engineer, shall result in the immediate suspension of the emission generating activities. Determine the source of the emissions and perform corrective measures to prevent further emissions. Clean up all visual accumulations by vacuuming or other appropriate methods and contain and store emitted materials to the satisfaction of the Project Engineer. Delays due to deficient work will be at no additional time or cost to the Department.

811.09.4.3 Total Suspended Particulate (TSP) Matter

Control emissions from the containment area to prevent exceeding the TSP Lead Level of 1.5 μg per cubic meter over a 24-hour period.

811.09.4.4 Penalty for Exceeding TSP Lead: An independent third party environmental testing firm under separate contract with the Department will conduct TSP Lead monitoring in accordance with 40 CFR § 50, Appendix B, *Reference Method for Determination of TSP Matter in the Atmosphere (high volume sampler required)*, and 40 CFR § 50, Appendix G, *Reference Method for Determination of TSP Matter Collected from Ambient Air* and position the TSP Lead monitoring equipment in general accordance with 40 CFR § 58, *Ambient Air Quality Surveillance*. The Department reserves the right to place TSP monitors anywhere within the project limits, including the regulated area.

Whether or not a penalty may be assessed under the provisions below, the Department shall have the authority to suspend and shall suspend all cleaning operations whenever air sampling results taken at any location around the work site indicate that TSP Lead emissions have exceeded the specified limit defined in 811.09.4.3**.** The Department will provide the contractor with written notice of suspension and all cleaning operations shall be suspended until corrections are made to the containment or work procedures are modified to comply with these requirements.

The Department will monitor and review the TSP Lead sample results. The first set of sample results that exceed the limit will set the penalty date. The Department will not assess the penalty for all sample results on and previous to the penalty date. The Department shall assess the penalty for all sample results that exceed the limit after the penalty date.

The Department shall deduct from the next payment to the contractor for the amount earned, a penalty in the amount of $1,500 for each 24-hour period, subsequent to the penalty date, in which one or more TSP monitors indicates that lead emissions exceeded the limit. The contractor shall be liable for this penalty on the basis of the aforementioned sample results, whether or not the Department has sustained any loss or damage, and whether or not the Department has incurred any cost as a result of lead emissions in excess of the limit. In addition, the contractor shall reimburse the Department for any penalties or fees assessed against it arising from such occurrences. The contractor waives any and all right to contest the sample results and any right to contest an adjustment of the contract price in the amount of any penalties or fees on the grounds that lead emissions in excess of the limit did not cause injury or harm to the Department or to third persons.

Upon the Department receiving the third TSP failing report after the penalty date, the contractor will be required to suspend all cleaning operations, examine the entire operation to determine the cause of the lead emissions in

excess of the limits, determine appropriate corrective measures, revise, and resubmit the previously accepted submittals to reflect the corrective measures to the engineer for review, then take the appropriate steps before resuming production.

In the event that work is suspended for corrective measures in accordance with the previous paragraphs TSP Lead monitoring, Contract Time will not be suspended.

811.09.4.5 Regulated Areas: Establish regulated areas around the work site to prohibit entry of unauthorized persons. Clearly mark the regulated area by the use of warning signs, rope, barrier tape, or temporary construction fencing.

Conduct monitoring in accordance with the NIOSH procedures upon initiation of dust producing operations.

811.09.4.6 Soil/Ground Quality: Submit a drawing showing the locations of the regulated areas, sensitive receptors, and storage and transfer areas to the Project Engineer for record and stake out these areas on the ground so the soil sampling can be performed.

Inspect the ground beneath and in proximity to the structure in the presence of the Project Engineer and the Environmental Compliance Unit for visible paint chips to establish an initial job site cleanliness standard. When heavy metals are in the existing coatings, the Department will collect soil samples prior to and after construction activities and test for heavy metals. If the Department determines that construction activities increased the heavy metal content in the soil, return the site to the pre-job levels or as directed at no additional cost or time to the Department. Submit proposed remediation procedure to the Project Engineer for review prior to initiation of remediation work.

The Department may conduct additional soil sampling and testing as necessary to determine the effectiveness of pollution controls, remediation methods and/or need for additional remediation.

811.09.4.7 Water Quality: Do not release, discharge, or otherwise cause hazardous materials, debris, waste, or paint chips to enter the water. Protect against releases due to rain and methods of surface preparation from reaching rivers, streams, lakes, storm drains, or other bodies of water.

811.09.5 Containment System for Field Work: Comply with Section 817, "Temporary Works" for submittal of Containment System Plan, and design, construction, operation and maintenance of containment system.

No erection of containment or scaffolding equipment is allowed until acceptance of the containment systems submittal.

Isolate the immediate work area to prevent pollution of air, water, and soil. Conduct all blasting and painting operations under containment. Prevent paint or debris, solids or liquids, from escaping the containment system. Emissions of lead-containing dust and debris shall be kept to levels below that required by all federal, state, and local regulations, and specifications. If constructing a suspended platform, use rigid or flexible materials as needed to create an air and dust impenetrable enclosure.

Filter air exhausted from the containment system by use of filtering systems or dust collectors. Provide containment equipment with air filtration systems with new unused filters and purged of contaminants prior to delivery to the project site. Maintain in good working condition. No dust discharge will be allowed from the exhausted air off the filters, dust collectors, or any vacuum truck used for pickup of spent materials.

Control the work environment within containment as required by OSHA regulations 29 CFR § 1926.62. Design as a minimum to provide ventilation of 100 feet per minute for cross draft and 60 feet per minute for down draft. These flow rates are not intended to serve as a bench mark that ensures compliance with OSHA standards, nor a safe working condition, but are minimum design criteria to limit the size of the containment system. Design mechanical ventilation system to reduce the airborne concentration of particulate matter inside of the containment to ALARA using best industry practices and using BADCT to achieve compliance with OSHA and EPA regulations.

Maintain on site copies of the Pollution Control and Monitoring Plan throughout the duration of the project.

811.09.6 Worker Protection Compliance: Comply with the submitted Worker Protection Plan outlined in 811.05.10.

Examine personnel that work at the project site in accordance with 29 CFR § 1926.62(j) (3) (ii) (A)-(F) prior to their working on the project.

Submit for record to the Project Engineer the following lead health/safety items for personnel that work at the project site at the times indicated.

Blood level test results initially, every two months, at the end of lead removal operations, and when personnel leave the job.

Personal air monitoring results for all job tasks after first full day of normal operation, and every three months.

Current lead training certification initially, and every 12 months.

Current respirator medical evaluation initially, and every 12 months.

Current respirator fit test initially, and every 12 months.

Current respirator training certification initially, and every 12 months.

Tabulate test results using name and job classification for the duration of the project. Failure to submit and maintain these records will be grounds for shutdown of all lead exposure activities.

As a minimum, provide exposure assessments, exposure monitoring, protective clothing, hygiene facilities, discarded clothing disposal facilities, on-site changing areas, showers, eating facilities, hand washing facilities, safety training, and personal protection equipment, as required by *OSHA Interim Final Rule on Lead Exposure in Construction* on projects where removal of lead based paint will occur.

As a minimum, provide the Department's personnel and its representatives protective clothing, hygiene facilities, discarded clothing disposal facilities, on-site changing areas, showers, eating facilities, hand washing facilities, safety training, and personal protection equipment conforming to the requirements of the *OSHA Interim Final Rule on Lead Exposure in Construction* on projects where removal of lead based paint will occur.

As a minimum, provide all personnel, including the Department's personnel and its representatives, interim respiratory protection, which shall include a respirator, respirator training, and fit testing, and a respirator program until an exposure assessment is performed and actual exposure is determined. Base the interim respirator protection on anticipated exposure levels greater than the Permissible Exposure Limit (PEL) (50 µg per cubic meter), but less than 10 times the PEL (500 µg per cubic meter). As a minimum, provide a half mask air purifying respirator with HEPA filters, which provides a respiratory protection factor of 10. Provide the appropriate respirator if, through exposure assessment, exposure level is greater than 500 µg per cubic meter.

811.09.6.1 Training: Submit training information in accordance with 811.05.11.

Train all workers and employees on the project as required by *OSHA Interim Final Rule on Lead Exposure in Construction*. Conduct training within the DOTD District where the project is located at a time and location as approved by the Project Engineer. Provide each worker and employee with a Certificate of Training.

811.09.6.2 Assessment: Conduct an employee exposure assessment in accordance with the *Interim Final Rule* on at least one worker designated by the Project Engineer. Fully document and report results of initial and any additional exposure assessments in time frames consistent with the *Interim Final Rule* and forward directly to the Project Engineer.

811.09.7 Debris Handling and Management: Remove debris generated from cleaning operation, including abrasive blast residue, spent blast medium, rust, mill scale, paint particles dust from the contaminant area, and place in leak proof containers. Remove debris from the containment area at least once per day. Transfer of debris material from the contaminant area to the containers, movement of containers within the work site, and movement of containers at the temporary storage site shall be such that no pollution of the environment will occur and workers are fully protected. The filled containers may be moved to a temporary storage site at the work site (same or geographical contiguous property) by the contractor. Transportation of the containers directly to an off-site storage site, temporary or permanent, must be done in accordance with 40 CFR § Part 263, and LAC 33:V. The contractor will be responsible for obtaining temporary off-site storage at their expense if utilized. The temporary storage site shall be secure, providing protection from migration of the debris into the environment, vandalism, and public access. Display warning signs prominently around the perimeter of the site. The debris may remain at the temporary storage site no longer than 90 calendar days.

811.09.7.1 Handling Debris: Handle debris generated during the bridge cleaning and painting process in accordance with one of the following.

Collect spent blast medium, rust, mill scale, paint particles, and dust from the contaminant area, dust collector debris, and air filtration equipment filters, place in leak proof containers and designate as "Listed Hazardous Waste" based on "process knowledge." Clearly mark these containers as hazardous, along with tare weight of the container, origin of material, and date of material collection, all with weather resistant labels. Transport to a beneficial reuse facility, such as a lead smelter. At the completion of all structural cleaning, clean and purge all support equipment, collect all used blast media and support equipment filters, and take to the beneficial reuse facility. The facility shall provide the Department with certification that the lead was reclaimed and that the waste has been recycled and no longer exists. No testing will be performed on any debris handled under this method.

Collect, test, classify, and filter decontamination water on site to remove particulates in accordance with local, state, and federal regulations, and the Project Engineer.

Contain, collect, test, classify, filter, and dispose of structural wash water in accordance with local, state, and federal regulations, and the Project Engineer.

Store other debris in separate leak proof containers. Debris that can easily

be classified by visual inspection as "Listed Hazardous Waste," such as mixed solid/liquid paint and paint related waste or other waste generated during the bridge painting operation, will be labeled as such and not be tested.

Debris that cannot be classified by visual inspection are to be sampled and tested to determine their classification and shall be properly disposed of based on that classification or as directed by the Project Engineer. Sample and test wastes in accordance with 40 CFR § Part 261, and LAC 33:V using the *Toxicity Characteristics Leaching Procedure (TCLP)*. The sampling and testing laboratory designated by the contractor and approved by the Project Engineer shall prepare a sampling plan in accordance with the *Environmental Protection Agency's Manual SW 846*. Submit the sampling plan to the Project Engineer as part of the Pollution Control and Monitoring Plan.

The Project Engineer will be present during the sampling of debris and will document that samples are representative of debris contained at the temporary storage site and that sampling conforms to the submitted sampling plan. Analyze samples in accordance with the best procedures and quality assurance requirements of 40 CFR § Part 268, and LAC 33:V.

811.09.7.2 Manifest: A manifest is required for the transportation of both hazardous and non-hazardous waste classified by either of the methods below. Return the manifest to the Project Engineer within 30 days of receipt from the treatment or disposal facility.

Upon completion of the project, the manifest will be transmitted to the Department's Materials Lab to the attention of the Environmental Compliance Unit by the Project Engineer and a copy retained and included in the final project record.

Wastes determined to be hazardous, either through process knowledge, testing, or otherwise, are subject to the provisions of RCRA and shall be completely manifested in accordance with 40 CFR § Part 262, and LAC 33:V when transported for treatment or disposal.

Wastes found to be non-hazardous by testing may be disposed of in a Subtitle D (non-hazardous) landfill. See LAC 33.VII *Solid Waste Regulations.*

The Department will be the generator of hazardous waste generated by the cleaning and painting operations. As generator, the Department will execute and sign the disposal manifest documents and provide the generator number. The contractor will be considered the co-generator of the waste, will sign the manifest, and is responsible for the proper conduct of, arrangement for, and payment of cost for the proper storage, testing, handling, transportation, treatment, and disposal of the generated wastes.

811.10 FAILURE TO COMPLETE WORK ON TIME. Failure to complete work on time will be subject to the provisions of 108.08.

811.11 MEASUREMENT.

811.11.1 Cleaning and Painting: Cleaning and painting new steel or other new materials will not be measured for payment. Cleaning and painting existing materials will be measured per lump sum.

811.11.2 Galvanizing: Galvanizing will not be measured for payment.

811.11.3 Cleaning and Metallizing: Cleaning and metallizing new steel will not be measured for payment. Cleaning and metallizing existing steel will be measured per lump sum.

811.11.4 Navigation Clearance Gauge (Painted): Navigation Clearance Gauge (Painted) will be measured by each.

811.12 PAYMENT. Contract unit prices shall include all materials, labor, equipment, containment systems, tools, testing, collection and disposal of wastes, and incidentals necessary to complete the work.

811.12.1 Cleaning and Painting: Payment for cleaning and painting existing materials will be made at the contract unit price in accordance with the submitted and accepted progress phases and segments for payment as described in 811.05.13.

811.12.2 Cleaning and Metallizing: Payment for cleaning and metallizing existing steel will be made at the contract lump sum price in accordance with the submitted and accepted progress phases and segments for payment as described in 811.05.13.

811.12.3 Navigation Clearance Gauge (Painted): Payment for navigational clearance gauge (painted) will be made at the contract unit price per each.

Payment will be made under:

Item No.	Pay Item	Pay Unit
811-01	Cleaning and Painting	Lump Sum
811-02	Cleaning and Metallizing	Lump Sum
811-03	Navigation Clearance Gauge (Painted)	Each

Section 812
Treated Timber

812.01 DESCRIPTION. Furnish and install lumber, timber, and hardware. Treat all timber unless otherwise specified.

812.02 MATERIALS. Materials shall comply with the following subsections:

Castings	1013.05, 1013.06
Structural Timber and Lumber	1014.01
Timber Preservatives	1014.03
Treatment	1014.04
Connectors	1014.05
Hardware and Structural Shapes	1014.06
Roofing Pitch	1018.09

812.03 SPECIES OF WOOD.

812.03.1 Permanent Structures: Use Douglas Fir or Southern Yellow Pine for permanent structures unless otherwise specified in the plans. Similar components must be of the same species throughout each structure.

812.03.2 Temporary Structures: Temporary bridges shall conform to Section 817, "Temporary Works." All other temporary structures may be any satisfactory species and grade of timber.

812.04 STORAGE OF MATERIAL. Keep lumber and timber stored on the site in orderly stacks. Stack material on supports above ground to permit free circulation of air between tiers and courses. Store timber in a manner which will prevent changes in dimensions, twisting, warping, and splitting of members before assembly.

Provide protection from the weather by suitable covering.

812.05 TIMBER. When treated timber is damaged or cut, repair disturbed areas with timber preservatives conforming to 1014.03.

812.05.1 Workmanship: Drive nails and spikes with just sufficient force to set the heads flush with the surface of the wood. Deep hammer marks in wood surfaces shall be considered evidence of poor workmanship and cause for rejection.

812.05.2 Surfacing: Lumber and timber, except bulkhead planks and sway bracing, shall be S4S (Surfaced Four Sides).

812.05.3 Handling: Handle treated timber with rope slings, without dropping or breaking of outer fibers, bruising, or penetrating the surface with tools.

812.05.4 Framing and Boring: Cut, frame, and bore treated timber before treatment insofar as practical. When treated timber is to be placed in

water infested by marine borers; avoid untreated cuts, borings, or other joint framings below high water elevation.

812.05.5 Installation of Timber Connectors: Install the split ring and the shear plate in precut grooves of dimensions as specified or as recommended by the manufacturer. Force the toothed ring and the spike grid into contact surfaces of the timbers joined by means of pressure equipment. Embed connectors of this type at a joint simultaneously and uniformly.

812.05.6 Cuts and Abrasions: After carefully trimming, cover cuts and abrasions in treated piles or timbers, with two applications of preservative and cover with hot roofing pitch.

Repair cuts and abrasions in timber treated with other preservatives with the same preservative.

812.05.7 Bolt Holes: Treat holes bored in pressure-treated material with preservative. Treat unused bore holes and spike holes with preservatives and plug with tight-fitting treated plug.

812.05.8 Temporary Attachment: Fill holes from temporary attachments with galvanized nails or spikes, or plug as required for bolt holes.

812.06 TREATMENT OF PILE HEADS.

812.06.1 General: After cutting, treat pile heads to prevent decay. Pile heads to be encased in concrete will not require treatment.

Immediately after making final cut-off on treated timber foundation piles, give the cut area two liberal applications of preservative followed by a heavy application of hot roofing pitch acceptable to the engineer, or other approved sealer. Protect heads of treated timber piles in bents or where the cut-off is exposed as follows.

Thoroughly brush coat the sawed surface with two applications of preservative, then place two layers of heavy canvas, size 20 inch x 20 inch, saturated with hot roofing pitch, followed by a 24 inch x 24 inch, 28 gauge galvanized metal cover. Bend the cover down over the pile approximately 45 degrees.

812.07 HOLES FOR BOLTS, DOWELS, RODS AND LAG SCREWS.

Bore holes for drift bolts and dowels perpendicular to the face of the timber 1/16 inch less in diameter than bolt or dowel. For square drift bolts or dowels, the diameter of the bored hole shall be equal to the least dimension of the bolt or dowel.

Bore holes for machine bolts the same diameter as the bolt.

Bore holes for rods 1/16 inch greater in diameter than the rod.

Bore holes for lag screws not larger than the body of the screw at the base of the thread.

812.08 BOLTS AND WASHERS. Use a washer of the size and type specified under bolt heads and nuts which would otherwise come in contact with wood. Stacked washers will not be permitted. Bolts shall not project more than 1 inch beyond the nut on work securely tightened. Saw cut long bolts or clip, grind smooth, and repair as specified in 811.08.

Nuts of bolts shall be locked after they have been tightened. Tack welding will not be allowed.

812.09 COUNTERSINKING. Countersink when required to prevent fasteners from protruding beyond the face of the timbers.

Paint horizontal recesses formed for countersinking with a preservative prior to hardware installation. After hardware is in place, fill with hot roofing pitch.

812.10 FRAMING. Accurately cut and frame lumber and timber to a close fit so that joints will have even bearing over the contact surfaces. No shimming will be permitted in making joints nor will open joints be accepted. Tightly bind or clamp mating pieces in position prior to drilling bolt holes.

812.11 PILE BENTS. Drive piles in accordance with Section 804.

812.12 CAPS. Place timber caps in a manner to secure uniform bearing over tops of supporting posts or piles. Secure caps by drift-bolts of at least 3/4 inch diameter extending at least 9 inches into posts or piles. Place drift-bolts approximately in center of the post or pile.

812.13 BRACING. Bolt ends of bracing through pile, post, or cap with a bolt of at least 5/8 inch diameter. Intermediate intersections of bracing shall be connected with wire or bolts.

812.14 STRINGERS. Size stringers at bearings and position stringers so that knots near edges will be near the top. Outside stringers may have butt joints with ends cut on a taper, but lap interior stringers to take bearing over the full width of floor beam or cap at each end. When stringers are two panels in length, stagger the joints. Neatly and accurately frame cross-bridging between stringers and securely toe-nail with at least two nails in each end.

Provide cross-bridging members with full bearing at each end against sides of stringers. Place cross-bridging at the center of each span.

812.15 PLANK FLOORS. Single plank floors consist of a single thickness of plank supported by stringers or joists. Lay planks heart side down, with 1/4 inch openings between them for seasoned material and with tight joints for unseasoned material. Securely spike each plank to each joist. Grade planks as to thickness and lay so that no two adjacent planks vary in thickness by more than 1/16 inch.

Two-ply timber floors consist of two layers of flooring supported on stringers or joists. Pressure treat the lower course with a preservative. Lay the top course either diagonal or parallel to the centerline of roadway, as specified, and securely fasten each floor piece to the lower course. Stagger joints at least 3 feet. If placing the top course parallel to the roadway centerline, take care to securely fasten ends of flooring. At each end of the bridge, bevel these members.

812.16 LAMINATED OR STRIP FLOORS. Place strips on edge at right angles to the roadway centerline. Spike each strip to the preceding strip at each end at approximately 18-inch intervals. Drive the spikes alternately near the top and bottom edges. Spikes shall be of sufficient length to pass through two strips and at least halfway through the third strip.

If using timber supports, toe-nail every other strip to every other support. When specified, securely attach strips to steel supports with approved galvanized metal clips. Take care to have each strip vertical and tight against the preceding one and bearing evenly on supports.

812.17 WHEEL GUARDS AND RAILING. Frame wheel guards and railing in accordance with the plans and erect true to line and grade. Lay wheel guards in sections at least 12 feet long.

812.18 PAINTING AND PROTECTIVE COVERINGS. Paint parts of structures as specified. Paint metal parts not galvanized in accordance with Section 811.

When timber decks are provided, protect top flanges of stringers and floor beams by a covering composed of a heavy layer of hot roofing pitch and one thickness of two-ply tar paper wide enough to project 3 inches beyond edges of members. Bend these edges down approximately 45 degrees.

812.19 MEASUREMENT. Quantities will be the design quantities measured by the number of thousand board feet, (MBFM). Hardware will not be measured for payment, unless specified on the plans as Structural Metalwork and a contract pay item provided.

812.20 PAYMENT. Payment for timber will be made at the contract unit price per thousand board feet.

Payment will be made under:

Item No.	Pay Item	Pay Unit
812-01	Treated Timber (Type)	MFBM

Section 813
Concrete Approach Slabs

813.01 DESCRIPTION. Furnish and construct concrete approach slabs of the type and dimensions at locations specified.

813.02 MATERIALS. Materials shall comply with the following sections and subsections:

Plastic Soil Blanket	203.10
Portland Cement Concrete	901
Bedding Material	1003.10
Joint Materials	1005
Thermoplastic Pipe	1006
Deformed Reinforcing Steel	1009.01
Timber Piling	1014
Hardware Cloth	1018.05
Geotextile Fabric	1019.01

Bedding material shall be either stone in accordance with 1003.03.1 or recycled portland cement concrete in accordance with 1003.03.2.

Polyethylene sheeting shall comply with AASHTO M171.

Geotextile fabric shall comply with Section 1019, Classes B, C, or D. The fabric shall be resistant to chemical, biological, and insect attack.

813.03 CONSTRUCTION REQUIREMENTS.

813.03.1 Embankment: Construct the headers to full embankment height as defined by the grading section elevations shown on the plans as early in construction as possible to aid settlement. If shown on the plans, construct wick drains and/or surcharge to the designated fill heights and allow to remain in place for the indicated duration. Perform structural excavation for end bent construction prior to driving piles.

Place geotextile fabric as a separation layer between the embankment and the bedding material beneath the approach slab in accordance with 203.11. Do not allow any equipment on the fabric unless there is at least 6 inches of cover.

When specified, place the approach slab on a layer of allowable bedding material in accordance with plan details. Place bedding material and compact

as directed. Cover with approved polyethylene sheeting of at least 6-mil nominal thickness.

813.03.2 Drainage Systems: Construct underdrain systems in accordance with the plans and Section 703.

813.03.3 Reinforcing Steel: Fabricate and place deformed reinforcing steel to comply with Section 806.

813.03.4 Support Piles: When shown in the plans, support the approach slab on piles in accordance with Section 804.

813.03.5 Concrete: Use Class A1 concrete for all approach slabs and bolster blocks under approach slabs in accordance with Section 805.

Use Class M concrete for headwalls for under drain system in accordance with plan details.

Cure approach slabs in the same manner as bridge decks in conformance with 805.06. Do not use membrane cure on approach slabs requiring asphalt overlay.

Surface tolerances shall conform to 805.03.4.

813.03.5.1 High Early Strength Concrete: When specified or when construction conditions merit opening up concrete approach slabs to traffic early before concrete is fully cured, the following requirements will apply for high early strength (HES) concrete.

Submit to the Project Engineer for review the HES concrete mix design. Verify by trial batch that the proposed HES concrete mix achieves a minimum compressive strength of 3000 psi within 4 hours and achieves a 28-day minimum compressive strength of 4500 psi as per Table 901-3. Mold and cure compressive strength specimens in accordance with DOTD TR 226 and test in accordance with DOTD TR 230. Submit results of trial batch testing to Project Engineer for acceptance before use on bridge approach slab.

Use a modified Class A1 concrete mix design for the HES concrete and conform to the following requirements:

1. Follow manufacturer/supplier's recommendations on mixing and placing high early strength concrete.
2. Do not use chloride-type accelerating admixtures.
3. Place the concrete continuously to prevent cold joints.
4. Promptly finish the concrete as specified in 813.03.6.
5. Immediately after finishing, apply curing compound at double the normal specified quantities.
6. Permit no traffic on the HES concrete approach slab until it obtains a minimum compressive strength of 3,000 psi.

Use curing boxes for the molded cylinders to emulate the strength gain of the in-place concrete. Submit to the Materials Engineer Administrator for review the maturity method for strength determination.

At the contractor's option, Type B or Type D concrete may be substituted in place of Class A1 concrete provided the mix achieves a 28-day minimum compressive strength of 4500 psi and meets the other requirements of this section.

813.03.6 Roadway Finish: Give the roadway a metal tine texture finish.

Surface finishes shall conform to 805.08. Finish approach slabs requiring asphalt overlay in accordance with 805.08.5 without tine finish.

813.04 MEASUREMENT. Quantities of concrete approach slab will be measured by the square foot of horizontal surface area measured to the outer perimeter. Required concrete, concrete closure placements, reinforcing steel, joint materials, bedding materials, surcharge material, geotextile fabric, polyethylene sheeting, underdrain pipe and system, rodent screen, and head walls will not be measured for payment. Asphalt overlay, when required, will be paid for under a separate item.

813.05 PAYMENT. Payment for concrete approach slabs will be made at the contract unit price which includes all materials, labor, equipment and tools necessary to complete the work and shall be subject to the following provisions.

Acceptance and payment for concrete approach slabs will be made on a lot basis. A lot will be considered as a complete approach slab or an identifiable placement that is completed in one day. Two random batches will be sampled for each lot, and three cylinders molded for each batch. The six cylinders per lot will be tested for compressive strength in 28 to 31 days. In the event of sudden cessation of operations, a minimum of three cylinders will constitute a lot. Acceptance and payment for each lot will be made in accordance with tables 901-4 and 901-6.

Payment will be made under:

Item No.	Pay Item	Pay Unit
813-01	Concrete Approach Slabs (Cast in Place)	Square Foot
813-02	HES Concrete Approach Slabs (Cast-in-Place)	Square Foot
813-03	Concrete Approach Slabs (Precast)	Square Foot
813-04	Concrete Approach Slabs (Pile Supported)	Square Foot

Section 814
Bearings

814.01 DESCRIPTION. Furnish and construct bearings of the type and dimensions at the specified locations. When existing bearings are replaced, prepare existing areas for installation of new bearings.

814.02 MATERIALS. Comply with the following sections and subsections.

Metals	807, 1013
Welding	809
Portland Cement Concrete	901
Elastomeric Bridge Bearing Pads	1018.14
Grout	1018.04

Stainless steel components shall conform to ASTM A240 / A240M – Type 304. All other steel components shall comply with AASHTO M270, Grade 50.

814.03 SUBMITTALS. Submit bearing Design, Fabrication and Installation Plan to the Bridge Engineer for review in accordance with Section 801. Do not begin work until submittal acceptance.

Include the following as a minimum:

1. State Project Number, project name, route, and parish.
2. Names of fabricator, manufacturer, and manufacturer's representative.
3. Description of work, and any other information requested by the engineer.
4. Material requirements.
5. When bearing requires design by the contractor, provide documentation verifying the contractor or subcontractor has the required design, fabrication and installation experience. The required experience consists of having designed and fabricated similar bearings for a minimum of five years, and having performed at least ten bearing installations similar to the specified bearing. The design of the bearing assembly shall be in accordance with the latest edition of the *AASHTO LRFD Bridge Design Specifications* and shall be stamped, signed and dated by a Professional Engineer registered in Louisiana.

6. When bearings contain steel fabrication, other than steel shims for laminated neoprene pads, provide fabricator's certification by the American Institute of Steel Construction (AISC) for Simple Steel Bridges.

7. Testing plan and acceptance criteria.

8. Identify protective coatings and application procedures.

9. Reviewed and accepted shop drawings, showing bearing identification markings.

10. Handling, transportation, storage and installation procedures.

814.04 CONSTRUCTION REQUIREMENTS. Construct in accordance with the latest edition of the *AASHTO LRFD Bridge Construction Specifications*.

Paint steel bearing assembly components exposed to weather, except stainless steel components and bearing surfaces, with a zinc paint system in accordance with Section 811.

Construct anchor bolts in accordance with 807.06.3.

Clean and finish or machine bearing installation surfaces and provide uniform bearing support. Set bearing to the specified position, grade and elevation.

Bearings or masonry plates which rest on steel supports may be directly installed on the supports provided the support is flat within a tolerance of 0.002 times the nominal dimension.

814.04.1 Bearing Types:

814.04.1.1 Elastomeric Bearing Pads: Conform to 1018.14. Set elastomeric bearing pads directly on concrete masonry.

Place girders when the ambient temperature average of 6 readings is not less than 50°F and not greater than 85°F. When girders are placed at temperatures outside of this range, lift girders or span to reset bearing positions within the specified temperature range. Resetting bearings will be at no additional cost or time to the Department.

814.04.1.2 Contractor Designed Bearing Assembly: Contractor designed bearings may consist of disc bearings, pot bearings, or other types of bearings as specified on the plans.

Perform long-term deterioration testing on a per lot basis. Pre-qualification is not allowed. Perform all testing on full complete bearing assemblies unless otherwise stated in the plans. The engineer will select the bearing assemblies from each lot to be tested. Acceptance of the bearings will be based on the limits, tolerances, and testing as stated in the latest edition of the *AASHTO LRFD Bridge Construction Specifications*.

Conform to Sections 807, 809, and 1013. Provide bearing designs and construction in accordance with the requirements of the contract.

814.04.1.3 PTFE Sliding Plate Bearing Assembly: When polytetrafluorethylene (PTFE) sliding plate bearings are specified on the plans, comply with the following requirements.

Use companies and shops normally engaged in production of bridge bearings similar to the types specified on the plans to fabricate sliding plate bearings.

Comply with Section 814 as amended herein.

Provide stainless steel sliding surfaces operating against a bearing surface of PTFE. Bearings shall be structurally equal to or greater than those shown on the plans and shall be designed to accommodate required movements and reactions. Polish stainless steel in contact with the PTFE sheet to a bright mirror finish, less than 20 micro-inches root mean square. Attach stainless steel to the structural steel substrate with a continuous seal weld in accordance with the applicable requirements of the latest edition of American Welding Society (AWS).

Machine all bearing surfaces of steel plates flat to within 0.010 inches per foot. Out-of-flatness greater than 0.010 inches per foot on any plate shall be cause for rejection. Gross dimensions shall have a tolerance of -0 inch, +1/8 inch. Each bearing assembly shall have the project identification number, lot number, and individual bearing number indelibly marked with ink on the side that will be visible after erection.

Visually examine each bearing assembly during and after testing. Any resultant defect, such as bond failure, physical destruction, or cold flow of PTFE to the point of debonding, extruded or deformed elastomer, or cracked steel, shall be cause for rejection.

Bearing assembly delivered to the construction site shall be stored under cover on a platform above the ground surface. Bearing assembly shall be protected at all times from damage. When erected, the bearing assemblies shall be dry, clean, and free from dirt, oil, grease, or other foreign substances. Bearing assembly shall not be disassembled unless otherwise permitted by the manufacturer or Engineer of Record.

Clean the bearing area of any residue deposited from the existing bearing or any other materials that would adversely affect the performance of the new bearing assembly. Set the bearing assembly as shown in the plans. Upon final installation of the bearing assembly, the Project Engineer, in the presence of the manufacturer's representative if required, will inspect the bearing

components to assure that they are level and parallel to within +0.005 radians. Correct deviations not conforming to the specified tolerances.

814.04.1.3.1 Construction Methods: After fabrication before bonding, plane stainless steel or PTFE back-up material to a true plane. Bonding of PTFE sheets shall be performed by the bearing manufacturer under controlled conditions and in accordance with written instructions of the adhesive system manufacturer. Side of PTFE sheet to be bonded to metal shall be factory treated by an approved manufacturer by the sodium naphthalene or sodium ammonia process.

After bonding operations, the PTFE surface shall be smooth, flat and free from bubbles. Filled PTFE surfaces shall then be polished. Fabric shall be capable of carrying unit loads of 10 ksi without cold flow. Bond or mechanically attach PTFE fabric to a rigid substrate.

The fabric-substrate bond shall be capable of withstanding a shear force equal to 10 percent of the perpendicular application loading without delaminating in addition to the shear force developed as a result of the natural bearing friction shear force. The test method shall comply with ASTM D1002.

Welding to steel plate which has a bonded PTFE surface will be permitted providing a welding procedure is established and accepted, which restricts temperature reached by the bond area to less than 300°F as determined by temperature indicating wax pencils, or other suitable means.

The clad plate shall comply with ASTM A264. In lieu of clad plate, the stainless steel plate may be continuously Tungsten Inert Gas Fillet Welded to the sole plate.

The back-up plate for the PTFE surface shall be factory vulcanized to the lower neoprene bearing element.

Where unfilled PTFE sheet is used, recess PTFE in backup plate by one-half of the PTFE sheet thickness.

Assemble bearings at the plant, mark for identification and deliver as a complete unit. Bearings shall have permanent match marks to indicate the normal position of the bearing. During transportation and storage, cover bearings with moisture proof and dust proof covers, and protect against damage.

Furnish manufacturer's certification of steel, elastomeric pads, PTFE and other materials used in fabrication of bearings.

814.04.1.3.2 Fabrication Inspection: Fabrication will be inspected by the Construction Section in accordance with Section 807 and the following.

Tests for coefficient of friction shall be performed by the manufacturer or in an approved laboratory. Test one completed bearing from each group. Test methods and equipment shall be approved and shall include, but not be limited to, the following:

Arrange tests so that the coefficient of friction at first movement of bearing can be determined.

Clean bearing surfaces prior to testing and a silicone gel may be added to the surfaces. When silicone gel is used between the bearing surfaces during the test, apply silicone gel to each bearing either before assembly at the fabrication plant or before erection in the field.

Conduct tests at maximum working stress for the PTFE working surface with test load supplied continuously for 12 hours prior to measuring friction.

Determine first movement static and dynamic coefficients of friction of test bearings at a sliding speed of less than 1 inch per minute and not exceeding 75 percent of the coefficient of friction specified in Table 814-1.

Table 814-1
Coefficient of Friction of Bearing

	Bearing Pressure[1]		
	500 psi	2000 psi	3500 psi
	Coefficient of Friction		
Unfilled PTFE, Fabric containing PTFE fibers, and PTFE Perforated Metal			
Composite	0.08	0.06	0.04
Filled PTFE	0.12	0.10	0.08

[1] The actual bearing pressure shall be provided to the fabricator upon request.

Subject bearing specimens to 100 movements of at least 1 inch of relative movement and if the test facility permits, full design movement at a speed of less than 1 foot per minute. Following this test, determine static and dynamic coefficients of friction again and do not exceed values measured in part 4 above. Bearing specimen shall show no appreciable sign of bond failure or other defects.

Bearings represented by test specimens passing above requirements will be accepted subject to onsite inspection for visible defects.

814.04.1.4 Cast Iron or Steel or Rolled Steel Bearings: Conform to Sections 807, 809, and 1013. Set cast iron or steel or rolled steel bearings on the masonry with a preformed fabric bearing pad.

814.05 MEASUREMENT. Elastomeric bearing pads will be measured by the square foot-inch. Bearing assemblies will be measured per each. Measurement for elastomeric bearing pads and bearing assemblies will include all materials between the bottom of the girder flange or sole plate and the substructure bearing installation surface, as specified in the plans.

Resetting bearings to specified temperature range will not be measured for payment.

814.06 PAYMENT. Payment for bearings will include all material, labor, equipment, tools, testing, and incidentals necessary to complete the work.

Payment will be at the contract unit price under:

Item No.	Pay Item	Pay Unit
814-01	Elastomeric Bearing Pads (Non-Reinforced)	Square Foot-Inch
814-02	Elastomeric Bearing Pads (Reinforced)	Square Foot-Inch
814-03	Bearing Assembly (Type)	Each

Section 815
Joints

815.01 DESCRIPTION. Furnish and construct joints of the type, dimensions, and at the locations specified. Joints are composed of metalwork plates, metalwork extrusions, or concrete nosing on both sides of the joint opening. Joints may contain a seal to prevent water and debris from passing through the joint opening.

When existing joints are to be replaced, prepare the existing area for installation of new joints.

815.02 MATERIALS

Comply with the following:

Metals	807, 1013
Welding	809
Portland Cement Concrete	901
Joint Fillers	1005.01
Joint Seals	1005

Unless otherwise specified, steel used in joint system fabrication, including barrier armoring, shall be AASHTO M270 Grade 50, and shall be hot dip galvanized after fabrication in accordance with Section 811. Use A325 high strength fastener assemblies in the sizes and lengths specified and in accordance with Section 807. Type 1 bolts, nuts, washers, and DTIs shall be mechanically galvanized in accordance with 811.08.

815.03 SUBMITTALS. When specified, submit a Joint Design, Fabrication Plan, and Installation Plan to the Bridge Engineer for review in accordance with Section 801. Do not begin work until submittal acceptance. Acceptance by the engineer will be subject to field performance and will not relieve the contractor of the responsibility to satisfactorily complete the work.

Include the following as a minimum:

1. State Project Number, Project name, route, and parish.
2. Names of fabricator and manufacturer's representative.
3. Material requirements.
4. When joint requires design by the contractor, provide documentation verifying the contractor or subcontractor has the required design, fabrication and installation experience. The required experience consists of having

designed and fabricated similar bridge joints for a minimum of five years, and having performed at least ten bridge joint installations similar to the joint specified. The design of the joint assembly shall be in accordance with the *AASHTO LRFD Bridge Design Specifications* and shall be stamped, signed and dated by a professional engineer registered in Louisiana.

5. When joints contain steel fabrication, provide fabricator's certification by the American Institute of Steel Construction (AISC) for Simple Steel Bridges.

6. Testing plan and acceptance criteria.

7. Identify protective coatings and application procedures.

8. Reviewed and accepted shop drawings, showing joint identification markings.

9. Installation Procedures.

The installation procedures included with the submittal shall be in accordance with the recommendations of the joint manufacturer, and shall include at a minimum:

a. Means of delivery, handling, lifting, and storing.

b. Step-by-step installation procedures.

c. Temperature setting and adjusting values.

d. Methods for securing joint temporarily during adjustment.

e. Methods for adjusting joint for temperature considerations.

f. Methods for insuring rideability.

g. Methods for installing and securing the joint, blockout reinforcing and post-tensioning, and for placing surrounding concrete to the lines required.

h. Methods for adjusting barrier shape and attaching barrier rail inserts, bolts, and sliding cover plate assemblies.

815.04 CONSTRUCTION REQUIREMENTS.

815.04.1 Joint Systems: Conform to Section 809 for welding. Field welding is not permitted.

The joint system shall accommodate the longitudinal movements shown on the plans while maintaining a smooth riding surface conforming to the profile grade of the bridge deck, with minimal space between fingers, plates, extrusions or concrete nosings. A smooth riding surface is defined as no more than 1/8 inch deviation of plates and finished concrete surface from a 10.0 feet straight edge placed anywhere across the joint.

When specified, the joint system shall prevent the passage of water, debris, and other deleterious substances through the deck joint.

Submit shop drawings to the Bridge Engineer for review in accordance with Section 801. On the shop drawings, show details of the joint, seal, trough, barrier armoring, plates, fastener assemblies, setting/installation tables and procedures, and all other elements of the work in accordance with the contract.

Store joint material under cover on platforms above ground, and protect at all times from damage.

815.04.1.1 Unsealed Expansion Joint: Fabricate and install joint as shown on the plans and specifications. Install joint in accordance with 815.04.2.

815.04.1.2 Sealed Expansion Joint: Fabricate and install joint as shown on the plans and specifications. Install joint in accordance with 815.04.2. Install joint seal in accordance with 815.04.3.

815.04.1.3 Sealed Expansion Joint (Modular): Fabricate and install joint as shown on the plans and specifications. Install joint in accordance with 815.04.2. Install joint seal in accordance with 815.04.3.

815.04.1.4 Expansion Joint (Finger): Fabricate and install joint as shown on the plans and specifications. Install joint in accordance with 815.04.2. Install joint trough in accordance with 815.04.3.

Provide steel finger plates, elastomeric drainage troughs, barrier sliding plate or armor assemblies, fastener assemblies, shapes, studs, anchors or fixing devices, and all other required components of the expansion joint system required to complete the work in accordance with the details and requirements of the plans and specifications.

Alternate designs shall be in accordance with *AASHTO LRFD Bridge Design Specifications*, including all fatigue requirements. Provide all features of the joint system as shown on the plans. This includes removable and replaceable plates, troughs, and parts (short, manageable sections), watertight drainage troughs, pre-tensioned anchor bolts, and other elements. Steel finger plates and armor plates shall sustain all loads and impacts without damage or fatigue of the joint or structure to which it is secured. If an alternate design is submitted by the contractor, the contractor shall be responsible for all costs associated with the review by the Department and/or the Department's consultant.

Maximum and minimum joint openings and finger plate requirements shall be as shown on the plans. Align fingers (teeth) parallel to the direction of movement and provide the minimum and maximum spacing required. Install the finger joint surface to provide a smooth riding surface that conforms to the profile grade.

Shape and install the fingers of the joint as shown on the plans to ensure that the fingers remain below the level of the riding surface at all times under all anticipated movements and rotations of the superstructure and substructure.

Design, fabricate, and install drainage troughs in accordance with the plans such that a minimum true slope of 8 percent is maintained across the structure with due consideration for superelevation at the joint location. Provide a minimum sag of 6 inches measured from the trough attachment points at the maximum joint opening at the centerline of the girder. Trough and sheet limits shall be as shown on the plans.

815.04.2 Joint Installation: Exercise care during installation to avoid damage to components of the joint system. All damaged plates, fingers, shapes, fastener assemblies, troughs, seals, membranes, or other elements of the work shall be removed and repaired or replaced with new components in a manner acceptable to the engineer and at no cost or time to the Department.

Deck surface preparation, including grinding and/or grooving required to meet surface smoothness and finish specifications, shall occur before installation of the joints. To allow movement of construction personnel, temporarily bridge joints using suitable materials and means that prevent damage to the structure until joints can be installed. Do not install joint until the Joint Installation Plan is accepted.

Employ positive methods to keep joints straight, true and in correct position during concrete placement. Adjust the open space of the expansion joints to accommodate the difference between the designated plan temperature and installation temperature. Remove temporary restraints placed in joints as soon as possible after placing concrete adjacent to the joint.

Do not extend reinforcement across the joint. Maintain proper cover on reinforcing steel at joint openings.

Installed joint shall be free of dirt, oil, grease, or other foreign substances.

Accurately locate and securely hold anchor bolts, armor plates, and fixing devices to correct line and level during placement of secondary concrete to fill the blockout region when required. Concrete shall be placed, properly consolidated with no voids, finished, and cured to ensure proper strength and durability.

When specified on the plans, provide a formed surface to contain the secondary concrete placement at the front edges of the opening underneath both sides of the joint. Secondary concrete for filling blockouts shall be the same class and strength as that specified for the bridge deck, unless otherwise specified. The contractor may propose a mix design utilizing a maximum coarse aggregate size of 3/8 inch provided the proposed mix meets the same

strength, permeability and durability specified for the bridge deck. Submit mix design to the Bridge Engineer for review.

Prior to final acceptance, remove all materials used to form the secondary placement of the expansion device blockout and to temporarily support the expansion device until concrete set.

815.04.3 Joint Seals: Install materials as shown on the plans and in accordance with the manufacturer's recommendations.

Seal joints full width, including curbs and sidewalks. The concrete shall be at least seven days old prior to sealing. Use similar sealants for the same type of joints within the entire structure.

815.04.3.1 Poured Seals: Before application of the sealant, clean and sandblast joint faces. Thoroughly dry joints at the time of installation. Install backer material and sealants in accordance with the manufacturer's recommendations.

Apply primers as directed by the manufacturer and the same day as sealant installation.

Use the appropriate backer material for the sealant system being applied.

Hot poured rubberized asphaltic type is not allowed for bridge deck joints.

815.04.3.2 Preformed Neoprene Sealing Systems: Apply the adhesive lubricant just prior to installation of the gland. Use an amount of lubricant sufficient to completely cover the contact surfaces of the steel extrusion and the seal glands. Install in a manner that least disturbs the adhesive lubricant. Do not dilute the adhesive lubricant.

815.04.3.3 Preformed Silicone Sealing Systems: Concrete or steel surfaces to which the seal is to be adhered shall be clean, dry, and free of all loose concrete or material that would adversely affect seal adhesion prior to application of the adhesive. For high early strength concrete joint repairs, shorter installation times may be allowed pending review and approval by both the joint seal and concrete manufacturers. Remove bond breaker residue to the satisfaction of the engineer. Size the joint seal dimensions in accordance with the plans. Materials used for forming new concrete joints where the seal is to be adhered shall be applied in accordance with the seal manufacturer's recommendations. Apply the adhesive in accordance with the manufacturer's recommendations. Follow the manufacturer's instructions and recommendations for handling and installing joint seal.

Rips, tears, or bond failure will be cause for rejection.

815.04.3.4 Fabricated Troughs and Membranes: Fabricate troughs and membranes as a single piece without splices. Construct watertight connections. Cut all material cleanly, with a true edge using suitable sharp

tools and methods to provide a straight and accurate installation. Conform to manufacturer's recommendations.

When drainage troughs are required, fabricate and install elastomeric drainage troughs, sheets, seals, or other membranes to collect all water, moisture, debris, and other deleterious substances from the roadway passing through the openings between fingers. Attach and seal troughs, sheets, seals, and membranes to the joint assembly so that no leakage occurs and adjacent parts of the structure remain protected during normal operation and flushing of the joints by maintenance personnel.

815.05 MEASUREMENT. Measurement of joints and seals will be per linear foot. Measurement will be the length parallel to the joint between curb lines. Components and work extending into curbs and barriers will not be measured for payment.

815.06 PAYMENT. Payment for joints and seals will be made at the contract unit price which includes design, submittals, materials, fabrication, testing, certification, transport, delivery, storage, handling, labor, equipment, tools, and incidentals necessary to complete the work.

Payment will be at the contract unit price under:

Item No.	Pay Item	Pay Unit
815-01	Unsealed Expansion Joint (Type)	Linear Foot
815-02	Sealed Expansion Joint (Type)	Linear Foot
815-03	Joint Seal (Type)	Linear Foot

Section 816
Bridge Drainage Systems

816.01 DESCRIPTION. Furnish and construct specified bridge deck drainage system.

816.02 MATERIALS. Materials shall comply with the plans and specifications and the following:

Culverts and Storm Drains	701.02
Manholes, Junction Boxes, Catch Basins, and	702.02
End Treatments	726.02
Bedding Material	805.02
Structural Concrete	806.02
Deformed Reinforcing Steel	807.02
Structural Metals	
Painting and Protective Coatings	811
Metals	1013
Stainless Steel Bolts	1013.08

Pipe hangers, scuppers and drain grates shall be steel conforming to ASTM A709, Grade 36, galvanized after fabrication in accordance with section 811.

Bolts, nuts, and washers connecting drain grates and scuppers shall be stainless steel AISI Type 416. All other bolts, nuts, washers and screws shall conform to ASTM A 307, galvanized in accordance with ASTM A 153/A 153 M or by an approved mechanical galvanizing process conforming to ASTM B 695 that provides the same coating thickness.

Piping and fittings shall be one of the following systems, at the contractor's option:

1. Aboveground piping shall be standard weight, schedule 40, galvanized steel pipe conforming to ASTM A 53/A 53 M, and underground piping shall be cast iron pipe conforming to ASTM A 74; or,

2. All piping (both underground and above ground) shall be standard weight, schedule 40, galvanized, nickel-copper alloy steel pipe conforming to ASTM A 53/A 53 M, except the chemical composition shall include copper content from 0.75 to 1.25 percent by weight and nickel content from 1.60 to 2.20 percent by weight.

When materials other than steel are specified, provide materials according to the plans.

816.03 CONSTRUCTION REQUIREMENTS.

816.03.1 Submittals: Submit fabrication details to the Bridge Engineer for review in accordance with Section 801. Do not order materials or begin work until submittal acceptance. Acceptance by the engineer will be subject to field performance and will not relieve the contractor of the responsibility to satisfactorily complete the work.

As a minimum include the fabrication details, material and coating requirements, proposed piping layout, fittings and slopes, grating details, and anchor and hanger details.

816.03.2 Bridge Deck Drainage System: Fabricate in accordance with the plans and specifications. Deviations will not be permitted without approval of the Bridge Engineer.

Provide the DOTD Fabrication Engineer at least 30 calendar day advance written notice of the beginning of work at the mill or shop so that inspection may be provided. No material shall be manufactured or work done in the shop before the DOTD Fabrication Engineer has been notified.

Furnish facilities for inspection of materials and workmanship in the mill and shop as described in Section 807.

Ends of pipe shall be smooth at welded joints; otherwise, pipe ends shall be grooved to facilitate mechanical type couplings. Pipe couplings shall be mechanical type, to mechanically engage and lock the groove pipe or fitting ends in a positive couple to allow for angular deflection and contraction and expansion. Each coupling shall consist of malleable iron housing clamps in two or more parts, a sealing gasket, and two or more steel bolts as required to assemble the housing clamps. Couplings shall be Victaulic Standard Couplings, Type 77, or Gustin Bacon No. 100 or other approved equal couplings.

Exposed metalwork not galvanized shall be painted in accordance with Section 811. Damaged galvanizing shall be repaired in accordance with Section 811.

816.03.3 Bridge End Drain System: Construct bridge end drain system in accordance with the plans. Comply with Section 701 for the placement of pipe. Comply with Section 702 for construction of the catch basin. Comply with Section 726 and 1003.10 for bedding material requirements.

816.04 MEASUREMENT.

816.04.1 Bridge Deck Drainage System: Bridge deck drainage systems will be measured per lump sum. Any estimated quantities shown in the plans are approximate and no guarantee is made that those are the correct quantities to be furnished. No adjustments in contract price will be made due to errors in the estimated quantities shown on the plans. Shop bills will not be required.

816.04.2 Bridge End Drain System: Bridge end drain system will be measured per each. Measurement for bridge end drain system will include all materials specified in the plans for the installation of the bridge end drain system.

816.05 PAYMENT. Payment for bridge deck drainage system and bridge end drain system will include all materials, labor, equipment, tools, testing and incidentals necessary to complete the work.

Payment will be made at the contract unit price under:

Item No.	Pay Item	Pay Unit
816-01	Bridge Deck Drainage System (Type)	Lump Sum
816-02	Bridge End Drain System (Type)	Each

Section 817
Temporary Works

817.01 DESCRIPTION. Furnish, construct, and remove temporary facilities employed in the execution of the work. Such facilities include but are not limited to temporary bridges, temporary sheeting, falsework, shoring, formwork, scaffolding, form travelers, cofferdams, water control systems, and containment systems.

817.02 MATERIALS.

Sheeting	802
Drilled Shafts	803
Piles	804
Concrete	805
Reinforcing Steel	806
Steel	807
Granular Material	1003.09
Fence and Guard Rail	1010
Timber	1014.01

817.03 CONSTRUCTION REQUIREMENTS. Design temporary works in accordance with the latest version of *AASHTO LRFD Bridge Construction Specifications*. Consider appropriately distributed construction loads such as stockpiled materials and construction equipment. Determine member capacities based on field conditions accounting for section loss, deterioration of capacity, alterations of the structure, and support conditions during all construction phases.

Conform to Section 801 for submittals.

817.03.1 Temporary Works Designed by Engineer of Record (EOR):

817.03.1.1 Temporary Detour Bridge: Submit for review shop drawings for fabricated elements. Submit installation, maintenance and removal plan for review.

Conform to Sections 803 for drilled shafts, 804 for piles and 704 for guardrails. Steel will not be required to be coated unless specified.

Construct temporary detour bridge as specified. Construct temporary detour road in accordance with Section 725.

Maintain the detour bridge in safe condition. If the contractor fails to maintain the detour bridge in a safe condition, the Department reserves the right to act in accordance with 105.16.

Remove the detour bridge in accordance with 202.03 when no longer required to carry traffic. Fill holes resulting from removal of bridge elements with a granular material. Temporary bridge materials shall remain the property of the contractor unless otherwise specified. Dispose of temporary bridge materials outside the right-of-way.

817.03.1.2 Temporary Sheeting: Submit for record material type and size, installation, and removal plan.

Install and remove temporary sheeting as specified in the plans and specifications in accordance with Section 802.

817.03.2 Temporary Works Designed by Contractor: Temporary works are considered to be the contractor's means and methods. Unless otherwise specified, submittals will be for record. Submit materials, drawings and construction details, and procedures for installation, operation, maintenance and removal. Submit supporting documentation such as engineering analysis and design and manufacturer's information for prefabricated elements. A professional engineer registered in Louisiana shall perform, seal, sign, and date all submitted analysis, related drawings, and design.

817.03.2.1 Construction Access Bridge: Provide a bridge for construction access within the limits of the specified right-of-way which meets the environmental commitments and hydraulic requirements at the site.

Perform all necessary additional clearing and grubbing as required to complete this item. Remove construction access bridge in accordance with 202.03. Fill holes resulting from removal of bridge elements with a granular material. All materials shall remain the property of the contractor and shall be removed beyond the limits of the right-of-way.

817.03.2.2 Contractor Sheeting: Install and remove contractor sheeting in accordance with Section 802 when no longer needed for construction, unless otherwise approved.

817.03.2.3 Falsework and Formwork:

Support falsework on a satisfactory foundation and remove upon completion of work. Falsework and formwork shall be set to give the finished structure the specified final position under all loads.

817.03.2.4 Cofferdams: General cofferdam requirements for bidding purposes may be included in the plans.

Design, fabricate, install, maintain, and remove the cofferdam system. The cofferdam system consists of temporary elements such as walls, supporting structural elements, and water control system. The cofferdam seal is part of the permanent structure designed by the EOR. The seal is designed to prevent water ingress and to provide vertical stability to the cofferdam system and foundation during all construction stages. Place the upper one foot of seal concrete in the dry to provide a level surface for forming and constructing the foundation footing.

The plan seal and foundation have been designed for vertical stability under the plan specified maximum allowable water surface elevation for dry foundation construction. Flood the cofferdam when the water elevation exceeds the specified maximum allowable water surface elevation. Flooding under this condition will be considered an excusable compensable delay in accordance with 108.07.4. Cofferdam flooding occurring at water elevations below the specified maximum allowable value will be considered a non-excusable delay in accordance with 108.07.5.

Alterations to the plan seal and foundation will require a Contractor or VE Proposal. Submit the proposal for review. The specified maximum water surface elevation will not be altered. Department cost to review, redesign and detail the seal and foundation will be reimbursed to the Department through Change Order regardless of whether or not the proposal is constructed.

Submit a Cofferdam Installation Plan to the Project Engineer for record. Include design assumptions, computations, details of cofferdam system elements, and sequences and methods of construction including excavation, installation of cofferdam system, and construction of seal and foundation, and cofferdam system removal. Include cofferdam system components to remain in the permanent work, repair methods and repair materials. The Cofferdam Installation Plan shall be designed, sealed, signed and dated by a professional engineer registered in Louisiana.

Design and construct cofferdam so that system and components safely perform under all aspects of global, external and structural stability during each stage of construction, including anchorage, embedment, and loads from balanced and unbalanced soil, water, and construction activities. Provide sufficient interior clearances for form construction, inspection of form exteriors, and to permit control of water.

Cofferdams that tilt or move laterally shall be righted, reset, and enlarged as needed to provide necessary interior clearances.

Control ingress of water so that construction can be performed in the dry. Dewater after seal concrete has cured. When weighted cofferdams are employed and the weight is utilized to participate in vertical stability of the system, provide anchorage to transfer cofferdam system weight to the seal. During placing and curing of seal, control the water elevation inside the cofferdam to prevent water flow through the seal.

If the cofferdam is permitted by the engineer or required by the plans to remain in place, vent or port cofferdam at or below low-water level.

Re-establish pre-construction ground elevations inside and outside of the cofferdam in accordance with Section 802.

Remove cofferdam system after completion of the work without damaging the finished work or existing adjacent structures. Portions of the cofferdam system which remain within concrete permanent work in accordance with the Cofferdam Installation Plan shall be removed to at least 6 inches from the surface of the permanent work. Use block outs to facilitate removal and patch permanent work with compatible materials conforming to the plans and the Cofferdam Installation Plan.

817.03.2.5 Water Control Systems:

817.03.2.5.1 Well Point System: When required by plans or the engineer, a well point system shall be designed, detailed, installed, maintained, and removed by the contractor. Install the well point system around the perimeter of the excavated area in a location such that other operations will not be impeded. The well point system shall continuously maintain the piezometric level in the soil at least 5 feet below the bottom of the excavated area.

When well points are no longer required for water control, plug abandoned well in accordance with 202.06.

Install piezometers or other suitable means of monitoring within the excavated area as required by field conditions. Make daily readings or measurements of the piezometers to verify that the well point system is operational. Excavation may begin when the level is 5 feet below the proposed excavation bottom surface for at least four hours.

Provide the well point system with a back-up system of pumps and power units. If failure of the well point system occurs, add water to the excavation as rapidly as possible at no additional cost or time to the Department.

Notify the engineer after completing each excavation. Do not place concrete until the engineer has accepted the excavation.

817.03.2.6 Cleaning and Painting Containment Systems: General containment system requirements for bidding purposes may be

included in the plans.

Design, fabricate, install, operate, maintain, and remove the containment system.

Design and construct the containment system in accordance with the Contract and SSPC Guide 6, Guide for Containing Debris Generated During Paint Removal Activities. Unless specified otherwise, provide a Class 1A containment system.

Determine member capacities based on field conditions accounting for section loss, deterioration of capacity, alterations of the structure, and support conditions during all construction phases. In addition, suspended scaffolding shall be designed in accordance with the requirements of 29 CFR § 1926 Subpart (L).

817.03.2.6.1 Containment System Plan Submittal: Prepare and submit for review Containment System Plan in accordance with 811.05. The Containment System Plan and calculations shall be prepared, sealed, signed and dated by a professional engineer registered in Louisiana.

Submit reviewed and accepted Containment System Plan as part of the Pollution Control and Monitoring Plan in accordance with 811.05.9. Include in the Containment System Plan as a minimum the following:

1. Describe the proposed containment system, including methods for collecting debris, and containment enclosure components.

2. A description of the ventilation system components and information including the fan curve and design point on the proposed dust collector.

3. A description and details of materials, seals, supports, connection hardware, anchorages, scaffolding, air ventilation and filtration systems, internal lighting and methods of attachment to the structure.

4. Procedures and details for installation and removal, including detailed information on attachment points to the structure.

5. Removal or retraction details to address weather events or maintenance of traffic requirements. Show components of the containment system to be removed and the methods of removal required to prevent an overstress of bridge members or the structure as a whole.

6. Drawings, including plan and elevation views of the containment system showing vertical and horizontal clearances to be maintained over highways, railways, and waterways.

7. Calculations, including assumptions, ventilation criteria if applicable, and a complete structural analysis. Demonstrate that the additional dead, live, and wind loads imposed by the containment system and construction activities, including contractor's equipment train do not cause overstress of

containment system or bridge members or compromise the structural integrity of the bridge. Check global stability of the containment system and structure. Show anticipated loads on the structure and the maximum permissible debris and wind loads permitted on the containment system.

817.03.2.6.2 Design and Construction Requirements: Design, construct, operate, and maintain containment system in accordance with 811.09.5 and Section 817.

Provide environmental, public and worker protection complying with 811.09 and the contract. Provide specified and required external and internal clearances.

Design, construct, operate, and maintain containment system to minimize vehicular, railway, and marine traffic disruptions. Unless otherwise specified, maintain existing vertical and horizontal highway, railway and waterway clearances. Provide capability of being removed, retracted, or opened to reduce wind load on the structure during adverse weather or to maintain required vertical and horizontal highway, railway, and waterway clearances.

Provide a containment system that can be removed or lowered and secured within 24 hours. Limit the containment system size to an area that will not damage the structure under a 55 mph wind speed.

Design, construct, operate, and maintain containment system so that the additional dead, live, and wind loads imposed by the containment system and construction activities do not cause damage to the structure, overstress of bridge members, or compromise the structural integrity of the bridge.

Permanent attachments or removal of existing fasteners to make temporary connections to the structure will not be allowed without written approval of the Bridge Engineer. Welding or drilling and bolting connections to steel bridge members are prohibited. Attachments to substructure elements are subject to review and acceptance by the Bridge Engineer. Attachments shall be temporary and shall not cause damage to the structure.

Design and construct platforms and their components to support at least four times their maximum applied load. Design, construct, operate, and maintain cables to support at least six times their maximum applied load. Comply with applicable OSHA regulations regarding rigging, staging, and scaffolding. At a minimum, meet OSHA 3150, A Guide to Scaffolding Use in the Construction Industry and Federal Specification RR-C-27-102, Chains and Attachments-Welded and Weldless.

Design, construct, operate, and maintain inside lighting in accordance with SSPC Guide 12, Guide for Illumination of Industrial Painting Projects.

Provide lighting to a minimum intensity of 20 ft-cd for general, 50 ft-cd for work, and 200 ft-cd for inspection.

Use fire retardant materials.

The containment system EOR shall certify that each installation conforms to the submitted, reviewed, and accepted Containment System Plan prior to use and shall inspect and recertify after each modification and after any hurricane, tropical storm, or local storm event affecting the work area.

Maintain the containment system and comply with the working drawings. Modifications require prior submittal, review and acceptance by the Project Engineer.

Coordination through the Project Engineer with permitting agencies is required for construction activities involving structures over waterways. U.S. Coast Guard approval will be required for any closures of, obstructions within, or reductions of vertical or horizontal clearance within navigable waterways. Comply with all requirements for interruptions, closures, obstructions, and clearance reductions affecting marine traffic.

Waterway permits and requirements shall be obtained and coordinated through the Project Engineer. For emergencies affecting navigation, immediately and directly contact the U.S. Coast Guard and/or the U.S. Coast Guard Marine Safety Office, and then notify the Project Engineer. Activities in the waterway will not be allowed without prior approval of the US Coast Guard.

Existing navigation lighting and aerial beacons shall be maintained at all times for the duration of the contract as well as additional containment obstruction lighting required by the U.S. Coast Guard.

In the event of a named hurricane or tropical storm forecasted to enter the work area within 72 hours, or in the event of an evacuation order in the work area, remove and re-install the containment system, equipment, and materials. The resulting delay will be considered an excusable, compensable delay in accordance with 108.07 and reimbursement will be made by force account in accordance with 109.04.3.

Repair damage to the structure caused by the containment system or construction activities to the satisfaction of the Project Engineer. Submit repair procedures to the Project Engineer for review prior to performing repairs.

817.04 MEASUREMENT.

817.04.1 Temporary Detour Bridge: Temporary detour bridge will be measured by the square foot of completed bridge and shall include construction, all striping, removal of the detour bridge, and restoration of the affected project site to pre-construction condition. When constructed in accordance with the design shown on the plans, measurement will be made by multiplying the clear roadway width by the length of bridge from beginning bridge joint at abutment to ending bridge joint at abutment. When allowed, and constructed with an alternate design, the measurement will not exceed the quantity required for the design shown on the plans.

When the contract does not include items for "Temporary Pavement Markings," these markings will be included in the items for "Temporary Detour Bridge."

817.04.2 Construction Access Bridge: When an item for "Construction Access Bridge" is included in the contract, the construction access bridge will be measured on a lump sum basis and shall include construction and removal of the access bridge and restoration of the affected project site to pre-construction condition.

When the contract does not contain an item for "Construction Access Bridge," the construction access bridge construction, removal and restoration of the affected project site to pre-construction condition will not be measured for payment.

Incidental items such as additional clearing and grubbing will not be measured for payment.

817.04.3 Temporary and Contractor Sheeting: Temporary sheeting will be measured in accordance with Section 802. Contractor sheeting will not be measured for payment.

817.04.4 Falsework and Formwork: Falsework and formwork will not be measured for payment.

817.04.5 Cofferdams: When an item for "Cofferdams" is included in the contract, the cofferdams will be measured on a lump sum basis.

When the contract does not contain an item for "Cofferdams," the cofferdams and cribs will not be measured for payment.

817.04.6 Water Control System: When an item for "Water Control System," is included in the contract, the water control system will be measured on a lump sum basis. Plugging of wells for well point systems will not be measured for payment and will be included in the cost for the water control system.

When the contract does not contain an item for "Water Control System", the contractor may use any approved method to control the seepage water as required within the specifications. The water control system used will not be measured for payment.

817.04.7 Cleaning and Painting Containment System: The cleaning and painting containment system will not be measured for payment and will be constructed in accordance with Sections 811 and 817.

817.05 PAYMENT. Payment for Temporary Works furnished, constructed, maintained, removed and restoration of the affected project site to pre-construction condition will be made at the contract unit price, which will include all material, labor, equipment, maintenance, submittals, and incidentals necessary to complete the item. When design is required, include the cost in the respective items.

Payment will be made under:

Item No.	Pay Item	Pay Unit
817-01	Temporary Detour Bridge	Square Foot
817-02	Construction Access Bridge	Lump Sum
817-03	Cofferdams	Lump Sum
817-04	Water Control System (Type)	Lump Sum

Section 818
Marine Pier Protection

818.01 DESCRIPTION. Furnish, install, and construct pier protection systems and components of the type and dimensions at locations specified.

818.02 MATERIALS. Comply with the following:

Structural Concrete	805
Deformed Reinforcing Steel	806,1009
Metals	807, 1013
Welding	809
Treated Timber	812
Portland Cement Concrete	901

Unless otherwise specified, use AASHTO M270 Grade 50 steel for structural steel components and hot dip galvanize after fabrication in accordance with Section 811. For structural steel connections, use ASTM A325 Type 1 mechanically galvanized high strength fastener assemblies in the sizes and lengths specified and in accordance with Section 807. Mechanically galvanize in accordance with 811.08.

Unless otherwise specified, use ASTM F593 stainless steel bolts with ASTM F594 stainless steel nuts and stainless steel washers (Alloy 304) for whaler and panel connections.

Unless otherwise specified, use 0.5 inch 1x19 Type 316 stainless steel wire rope and stainless steel hardware.

For materials in 818.02.2 through 818.02.5, use an accredited third party laboratory to test materials for compliance with performance requirements. For material compliance verification, submit to the Project Engineer for review the "Certificate of Analysis" and material test results showing that the material meets the specification criteria.

818.02.1 Pier Protection Systems: Use materials specified in the plans.

818.02.2 Ultra-High Molecular Weight Polyethylene (UHMW-PE) Panels: use ultra-high molecular weight polyethylene panels conforming to ASTM D4020. Use material with a specific gravity of 0.926 to 0.945 in accordance with ASTM D792, a minimum ultimate tensile strength of 4100 to 5100 psi and elongation at break of 330 to 420 percent in accordance with ASTM D638. Chamfer the outer edges to the specified dimensions. Color

material as specified in the plans. Use material components with a minimum thickness of 2.00 inches, and drill and counter-bore after fabrication.

Use materials free from defects that may adversely affect the performance or maintainability of individual components or installation.

818.02.3 Plastic Composite Marine Timber (PCMT): Use polyethylene or polypropylene. Color components by mixing plastic with appropriate colorants. Unless otherwise specified, use alternating black and yellow walers. Provide components containing ultraviolet (UV) inhibitors and antioxidants. Provide components containing hindered amine light stabilizers to provide sufficient resistance to UV light degradation. Conform to the properties of Table 818-1.

A standard commercial product is one that has been sold or is being currently offered for sale on the commercial market through advertisements or manufacturer's catalogs or brochures, and represents the latest production model. Additional features that improve the product, not specifically prohibited by this specification, but which are a part of manufacturer's standard commercial product, may be permitted in the PCMT being furnished. Submit for review documentation demonstrating that the PCMT being supplied have been installed on at least two projects constructed no less than 4 years prior, and are currently performing satisfactorily.

Use seamless smooth repairable outer skin PCMT with square cross section and rounded corners. Cut both ends square.

Use materials free from defects that may adversely affect the performance or maintainability of individual components or installation.

Use straight or curved PCMTs. When specified, reinforce the PCMT with fiberglass elements conforming to Table 818-2.

Use PCMTs with dimensions and tolerances conforming to Table 818-3.

Table 818-1
Plastic Properties

TEST METHOD	PARAMETER	COMPONENT	REQUIREMENT
ASTM D792	Density	Skin	Unblown plastic - 55-63 lb./cu. ft
ASTM E12	Density	Core/Annulus	34-50 lb./cu. ft
ASTM D570	Water Absorption	Skin	24 hr.: < 3.0% wt. Increase 2 hr.: < 1.0% wt. Increase
ASTM D746	Brittleness	Skin	No break at -40°F
ASTM D746 modified	Impact Resistance	Skin	Greater than 4 ft-lb./in.
ASTM D2240	Hardness	Skin	45-55 (Shore D)
ASTM D4329 UVA-340	Ultraviolet	Skin/Core/Annulus	No more than 10% change in Shore D durometer hardness after 500 hours exposure
ASTM D4060	Abrasion	Skin	Weight Loss:< 0.5 g Wear Index: 2.5 to 3.0 Cycles = 10,000 Wheel = CS17 Load = 2.2 lbs.
ASTM D543 modified, Procedure I	Chemical Resistance	Skin/Core/Annulus Sea Water Gasoline No. 2 Diesel	 < 1.5% weight increase < 7.5% weight increase < 6.0% weight increase
ASTM D638	Tensile Properties	Skin/Core/Annulus	Minimum 500 psi at break
ASTM D695	Compressive Modulus	Skin/Core/Annulus	Minimum 40,000 psi
ASTM F489	Coefficient of Friction	Skin	Maximum 0.25, wet or dry
ASTM D1761 Section 102	Nail Pull Out	Skin/Core/Annulus	Minimum 60 lb.

Table 818-2
Figerglass Reinforcing Elements

TEST METHOD	PROPERTY	REQUIREMENT
ASTM D4476	Flexural Strength	70,000 psi
ASTM D695	Compressive Strength	40,000 psi

Table 818-3
Dimensions and Tolerances

Size (inch):	6 x 12	8 x 12	10 x 10	12 x 12
Length Tolerance	+/- 12 in	+/- 12 in	+/- 12 in	+/- 12 in
Width	6.0 +/- 0.25 in	8.0 +/- 0.25 in	10.0 +/- 0.25 in	12.0 +/- 0.25 in
Height	12.0 +/- 0.25 in	12.0 +/- 0.25 in	10.0 +/- 0.25 in	12.0 +/- 0.25 in
Corner Radius	2.5 +/- 0.375 in	2.5 +/- 0.375 in	1.875 +/- 0.375 in	1.875 +/- 0.375 in
Outer Skin Thickness	0.1875 +/- 0.125 in	0.1875 +/- 0.125 in	0.1875 +/- 0.125 in	0.1875 +/- 0.125 in
Distance from outer surface to reinforcing rods	1.5 +/- 0.375 in	1.5 +/- 0.375 in	1.4 +/- 0.375 in	1.7 +/- 0.375 in
Straightness (gap, bend, or bulge inside while lying on a flat surface)	< 1.5 inch per 10 feet of length	< 1.5 inch per 10 feet of length	< 1.5 inch per 10 feet of length	< 1.5 inch per 10 feet of length

818.02.4 Extruded Rubber Fender Elements: extrude elements of homogeneous rubber free from defects, including, but not limited to, impurities, pores, and cracks.

Use natural or synthetic rubber conforming to one of the following ASTM D2000 line callouts:

- D2000 3BA 720 A14, B13, C12, F19, Z1, Z2 and Z3
- D2000 4AA 720 A13, B13, C12, EA14, F17, Z1 and Z2

818.02.5 Molded Rubber Fender Elements: Mold buckling column elements of homogeneous rubber free from defects, including, but not limited to, impurities, pores, and cracks. Provide elements completely bonded to integral steel mounting plates. Fully encase the steel in rubber with a minimum thickness of 1/16 inch.

Use natural rubber to mold elements conforming to the following ASTM D2000 line callout as specified in the plans.

Unless otherwise noted, use AASHTO M270, Grade 50 steel for steel elements.

818.03 SUBMITTALS. Conform to Section 801.

Submit to the Project Engineer for review one copy of the following:

1. Manufacturer's standard and most recent product brochure and Technical Manual for the product.
2. Manufacturer's qualifications and previous installations demonstrating specified performance requirements, including installation owner contact information.
3. "Certificate of Analysis" and material test results.
4. Shop Drawings of components including dimensional tolerances. No deviation from specified dimensions or tolerances is permissible without prior approval of the Project Engineer.
5. Assembly and installation procedures.

818.04 CONSTRUCTION REQUIREMENTS. Unless otherwise specified, counter-bore holes for anchors and fasteners exposed to vessel impact. Counter-sink the top of fasteners below the surface of the fender element a minimum of 0.5 inches.

Installation of pier protection systems and components may involve underwater work.

818.04.1 Marine Pier Protection System: Construct pier protection system as specified in the plans. Pier protection system components to be included in this item will be specified in the plans.

818.04.2 Ultra-High Molecular Weight Polyethylene (UHMW-PE) Panels: Furnish and install UHMW-PE panels as specified.

818.04.3 Plastic Composite Marine Timber (PCMT): Manufacture PCMT in a continuous process resulting in no joints within the member. Provide PCMT's composed of a coextruded outer skin of dense, unblown plastic, an inner core of foamed plastic manufactured prior to the manufacture of the timber, and an annulus of foamed plastic encapsulating the reinforcing elements.

818.04.3.1 Fabrication: Fabricate the outer skin of the PCMT continuous, homogenous and smooth throughout the entire length and perimeter of the timber. Form by coextruding a plastic material at the same time that the annulus material is extruded. Conform to the applicable sections of Table 818-1. Occasional blisters and pockmarks may be allowed in the outer skin.

Include a minimum 7.5 percent (by weight) stable bromine/antimony trioxide as a flame-retardant additive in the co-extruded outer skin. Include in each shipment delivered to the job site a quality control report from the manufacturer certifying these minimum requirements are satisfied.

Fabricate the annulus of the PCMT as a continuous foamed structure, black in color, throughout the length of the PCMT. Melt fuse the annulus to the inner core in such a manner that the joint between the inner core and the annulus develops the full strength of the plastic.

When reinforcing elements are specified, provide four 1.25-inch diameter reinforcing elements in the specified cross section. Arrange the reinforcing elements in a rectangular pattern with one bar in each corner of the cross section within the annulus of the PCMT. Use reinforcing elements of standard industry make and appearance, and free from kinks and sharp bends. Provide reinforcing elements the length of the PCMT, terminating flush with the ends, with the end of the element exposed. Do not use supports for the reinforcing element in the PCMT. Relieve residual stresses in the reinforcing elements through a post-production treatment.

Fabricate the inner core of the timber as a continuous homogenous foamed structure which reflects a consistent cell structure when viewed across the grain, black and uniform in color, throughout the length of the PCMT. Butt joints as required for manufacturing may be utilized provided the full strength of the member is developed in the joint. No singular void is allowed in excess

of 3 percent of the total foamed cross sectional area and greater than 3 inches in length.

Relieve residual stresses in PCMTs by performing a post-production operation.

Provide a copy of the owner's field guide with the first shipment of PCMTs to the job site. Include information and diagrams describing and illustrating the recommended means for handling, placing, installing, and finishing the PCMTs.

818.04.3.2 Design and Performance: Provide PMCT's conforming to the structural characteristics of Table 818-4. Provide an independent laboratory report verifying the yield stress and the Modulus of Elasticity of a full-size test specimen. The Modulus is to be taken at a strain of 0.01 inches per inch, where strain equals (6) x (depth of cross section) x (deflection) / (span length squared) and where Modulus of Elasticity equals (load) x (span length cubed) / [(48) x (deflection) x (moment of inertia)].

Table 818-4
Structural Properties

Size (inch):	6 x 12 (Strong Axis)	8 x 12 (Strong Axis)	10 x 10	12 x 12
Fb (min.) Reinforced with 4 ea. 1.25 inch dia. bars	NA	5155 psi	4517 psi	3466 psi
Fb (min.) Unreinforced	860 psi	860 psi	860 psi	860 psi
Weight - Reinforced	26 – 32 lb/ft	27 - 33 lb/ft	29 - 36 lb/ft	41 – 50 lb/ft
Weight - Unreinforced	23 – 29 lb/ft	25 – 31 lb/ft	27 – 33 lb/ft	39 – 47 lb/ft

Fb (min.) = Yield Stress in Bending (psi)
Weight = pound per foot

Provide PCMT's and accessories of the same classification that are interchangeable. Provide a representative sample of the PCMT clearly marked with the manufacturer's name and distinct serial number near each end of the product.

818.04.3.3 Quality Assurance: Manufacture with a Quality Assurance Program and provide PMCT's meeting the specified material, fabrication, design, and performance specifications.

The Project Engineer will perform a visual inspection of each complete PCMT for compliance with the appropriate requirements of this specification.

The Project Engineer may also inspect manufacturing records to ensure that the PCMT's conform to these specifications.

Provide documentation of test results of the product, meeting the requirements of this specification, performed by a testing laboratory independent of the manufacturer, and under the direction of a testing engineer from the testing laboratory. Provide as a minimum the following:

A copy of the test report showing the results of the physical and mechanical test listed in Table 818-1. For these tests, extract all test specimens from a full-scale product of the specified size. The results of these tests may be extended through engineering calculations, to a product of another size only if the other size has the same or smaller cross section than the tested product.

Cut test specimens from plastic from the full-scale product, except those tests that require the entire cross section of the product to be tested. Test the product full-scale in bending, to quantitatively determine the flexural modulus of elasticity and the bending yield stress. Scale model tests are not acceptable. Use a test configuration which provides three point bending, with the product simply supported at two locations, with the load applied equidistant from the two supports. Use a supported span to depth ratio of a minimum of 16:1. Load the product at least until the specified minimum yield stress is reached. During the test, load and record the corresponding deflection data. Measure deflection at the load point, and at two other points, each equidistant between the supports and the load. Measure deflection at least at 1,000 pound load increments.

Use load and deflection data acquired during the test to calculate the stiffness (EI), and the bending stress. The flexural modulus of elasticity is calculated by dividing EI by the moment of inertia of the cross section of the product. Calculate the properties utilizing standard elastic beam flexure formulas. Report the stiffness (EI) as the average of the stiffness at all measurement locations, between zero load and half the load corresponding to the specification yield stress. The specified minimum yield stress in bending is required to be reached before failure of the product. Calculate stress at the load point, on the tension side of the PCMT.

818.04.3.4 Transportation and Installation: Transport the PMCT in a manner to minimize any scratching or damage to the outer surface.

Install in accordance with the manufacturer's recommendations and guidelines as noted in the owner's field guide and as specified.

818.04.4 Extruded Rubber Fender Elements: Install extruded rubber fender elements as specified. When necessary, close the bore with

molded end closure, rubber plugs, or other acceptable means to prevent bore filling with material.

Provide the Project Engineer with certified performance curves, certificate of analysis, and material test reports for rubber compound, furnished by the manufacturer's testing laboratory or an independent testing agency, attesting that each product or material furnished meets the specification.

Manufacturer of extruded, direct-contact fenders shall have been manufacturing extruded rubber marine fenders for at least 5 years and show proof of at least three installations, each having been in service at least three years and currently performing satisfactorily.

818.04.5 Molded Rubber Fender Elements: Erect buckling column in the specified location and attach to the pier protection components using the specified hardware.

Performance requirements for fender elements are as follows.

Minimum Energy absorbed = 39 ft-kips $\pm$ 10 percent
Maximum Reaction Force = 43 kips $\pm$ 10 percent

Provide fender elements capable of absorbing a horizontal shearing force equal to 30 percent of its rated reaction, while simultaneously absorbing the specified minimum energy without exceeding the specified maximum reaction.

Provide a minimum and maximum allowable fender standoff adequate to prevent contact between the bridge and other objects, and measured as indicated in the plans.

Submit to the Project Engineer a certified test report or certificate of conformance or compliance, furnished by a recognized independent domestic testing lab, attesting that each product or material furnished under this specification meets the requirements herein. Furnish certified test reports or certificates for the rubber compound and the steel.

Manufacturer of rubber fender elements shall have been manufacturing rubber fender elements for at least 5 years and show proof of at least 3e installations, each having been in service at least three years and currently performing satisfactorily.

818.05 MEASUREMENT. Pier protection system will be measured per lump sum.

UHMW-PE panels will be measured per square foot of material satisfactorily installed and accepted.

Plastic composite marine timber (unreinforced/reinforced) will be measured by the linear foot of installed and accepted timber.

Extruded rubber fender elements will be measured by the linear foot of installed and accepted fender element.

Molded rubber fender elements will be measured per each fender element installed and accepted.

818.06 PAYMENT. Payment will be made at the contract unit price which includes all material, fabrication, testing, certification, divers, mounting fasteners and anchors, tools, equipment, labor, transportation and incidentals, and the performance of all work necessary to complete the work.

Payment will be at the contract unit price under:

Item No.	Pay Item	Pay Unit
818-01	Pier Protection System (Marine)	Lump Sum
818-02	UHMW-PE Panels	Square Foot
818-03	Unreinforced Plastic Composite Marine Timber (Size)	Linear Foot
818-04	Reinforced Plastic Composite Marine Timber (Size)	Linear Foot
818-05	Extruded Rubber Fender Elements	Linear Foot
818-06	Molded Rubber Fender Elements	Each

Section 819 (Reserved)

Section 820
Movable Bridges

820.01 DESCRIPTION. Provide all material, equipment, tools, measuring devices, and labor to purchase/fabricate, shop test, transport, install/erect, align/adjust, paint, lubricate, field test, and setup a Movable Bridge as specified herein.

These specification govern both new construction projects and rehabilitation/ repair projects.

820.01.1 Structural Specifications: All specifications for bridges in other sections that are applicable to the structure of a Movable Bridge shall apply, unless otherwise specified herein or shown on the plans.

820.01.2 Mechanical System Specifications: See Section 821 for Mechanical System specifications.

820.01.3 Electrical System Specifications: See Section 822 for Electrical System specifications.

820.01.4 Operator's House/Machinery House Specifications: See Section 823 for Operator's House/Machinery House specifications.

820.02 ACRONYMS AND ABBREVIATIONS. See 101.02, 801.02, 821.02, and 822.02 for acronyms and abbreviations.

820.03 DEFINITIONS. See 101.03, 801.03, 821.03, and 822.03 for additional definitions.

Balance Blocks. Concrete blocks that can be added or removed from a counterweight to adjust the counterbalance of a movable span, usually weighing approximately 80 pounds.

Bobtail Swing Span Bridge. A swing span bridge where the length of the movable span on the channel side of the pivot girder is longer than the opposite length. Balancing the span requires a counterweight.

Counterweight. A large heavy concrete and/or steel structure used to counterbalance the weight of a movable span or a movable barrier.

Equal Arm Swing Span Bridge. A swing span bridge where the length of the movable span on the channel side of the pivot girder is equal to the opposite length.

Lift Tower. Towers on a vertical lift bridge that facilitate lifting of the movable span.

Machinery Deck. Platform on top of a vertical lift bridge lift tower where the span drive machinery is located.

Movable Barrier. A barrier that is lowered perpendicular to the roadway to provide a physical barrier to vehicular traffic when a movable bridge is open to marine traffic.

Movable Bridge. A bridge, usually crossing a navigable waterway that has a span that can be moved to open the waterway for marine navigation.

Movable Bridge (Bascule Span). A movable bridge that has a cantilevered movable span which rotates vertically about a horizontal axis to allow marine navigation of the waterway with unlimited vertical clearance.

Movable Bridge (Pontoon Span). A movable bridge that has a floating movable span which rotates horizontally about a pivot point to allow marine navigation of the waterway with unlimited vertical clearance. The floating span becomes part of the fender system when the span is in the open position.

Movable Bridge (Swing Span). A movable bridge that has a cantilevered movable span which rotates horizontally about a vertical axis to allow marine navigation of the waterway with unlimited vertical clearance.

Movable Bridge (Vertical Lift Span). A movable bridge that has a counterweighted movable span which lifts vertically between two towers to allow marine navigation of the waterway with limited vertical clearance.

Movable Span. The span on a movable bridge that can move by means of permanently installed mechanical and electrical systems to allow marine navigation of the waterway.

Pivot Girder. Girder on a swing span bridge that is located on the center pivot bearing and supports the entire weight of the movable span during operation.

Sheave. Large pulley located on top the lift towers of a vertical lift bridge which support the counterweight, counterweight wire ropes, and the movable span. Sheaves facilitate counterbalancing and movement of the movable span.

Sheave Trunnion. Large axle on which a sheave rotates.

Span Trunnion. Large axle on which a bascule span rotates.

System Integrator. A designated representative of the contractor that has the knowledge, experience, responsibility, and authority to integrate the work of all engineering disciplines related to the project.

Traffic Gate. A gate that is lowered perpendicular to the roadway to provide a visual warning to vehicular traffic when a movable bridge is open to marine traffic.

Trunnion. Large axle on which any heavy movable structure or component rotates. (e.g. bascule span, sheave, counterweight, etc.)

Trunnion Bearings. Large sleeve or roller bearings that facilitate rotation of a trunnion.

Unequal Arm Swing Span Bridge. See "Bobtail Swing Span."

820.04 MATERIALS.

Structural Concrete	805.02
Reinforcing Steel	806.02
Structural Metals	807.02
Steel Grid Flooring	808.02
Bridge Railings, Hand Railings and Permanent Roadway Barriers	810.02
Painting and Protective Coatings	811.03
Treated Timber	812.02
Concrete Approach Slabs	813.02
Bearings	814.02

Joints	815.02
Drainage Systems	816.02
Mechanical Systems	821.04
Electrical Systems	822.04
Facilities	823.04
Portland Cement Concrete	901.02
Epoxy Resin Systems	1017

All material for fabricated items and all construction material for movable bridges shall be new.

820.05 GENERAL REQUIREMENTS.

820.05.1 Federal, State, and Local Codes and Laws:

Providing work in accordance with Federal, State, and local codes, laws, ordinances, and codes listed in 821.05.1 is a minimum requirement. Work specified in the Contract that is more stringent than that required by the Federal, State, and local codes, laws, and ordinances shall also be provided. Work that does not meet the requirements of the Federal, State, and local codes, laws, and ordinances, and/or the Contract documents shall be corrected at no additional cost or time to the Department.

820.05.2 Specifications and Standards: Comply with 821.05.2 unless otherwise specified.

820.05.3 Workmanship: Unless otherwise directed, use best industry practices at all times during the fabrication, transportation, erection, installation, alignment, adjustment, and testing of the movable bridge structure and performance of all related work.

820.05.4 Personnel: Provide construction personnel who are knowledgeable and experienced in the construction of movable bridges or other similar heavy movable structures. Although the plans are of sufficient detail and quality to convey the intent of the design to an experienced contractor, they do not necessarily depict every detail or specify every incidental or ancillary item required for the movable bridge to be properly fabricated, transported, erected, aligned, adjusted, tested, painted, and to function in accordance with the intent of the Contract.

Provide a "System Integrator" to perform the following:

1. Point of Contact: Act as the point of contact between the Department, the contractor, and the subcontractors, for all construction issues and issues related to the review of submittals.

2. Contract Compliance of Submittals: Review and manage submittals from the various subcontractors to insure they comply with the Contract prior to forwarding to the Bridge Engineer for review.

3. Submittal Corrections: Review submittals that were returned for correction to verify that all comments were addressed prior to returning submittals to the Bridge Engineer for review.

4. Coordination of Work: Coordinate the work of the various subcontractors to assure that one subcontractor's work does not delay or conflict with the work of another subcontractor, and ensure that all work proposed by one subcontractor will integrate correctly with the work from another subcontractor.

5. Dispute Mediation: Mediate and quickly resolve disputes between subcontractors to prevent construction delays.

6. Final Setup and Testing: Oversee final setup and testing of the movable span. Submit testing procedures for review. Verify all mechanical and electrical equipment are installed and adjusted correctly, and the movable span is performing properly before requesting a final inspection of the span by the Bridge Engineer.

820.06 MOVABLE BRIDGE SUBMITTALS.

Movable Bridge submittals shall comply with Section 105.02.2, 801.05, 821.06, and 822.06. They include shop drawings, cut sheets, field measurements, calculations, manuals, and any other document that the contractor is required by the Contract to produce and submit to the Bridge Engineer for review or record.

The purchase or fabrication of any item prior to the completion of the submittal process is at the contractor's risk. Said items that are later determined to be unacceptable for use on the project, will be rejected by the Department at the contractor's expense, even if the items purchased or fabricated are identical to that shown on the contract documents (plan error).

Always copy the Project Engineer whenever transmitting submittals.

820.06.1 Lubrication and Equipment Setting Drawings: Prepare and submit lubrication and equipment setting drawings to the Bridge Engineer for review. Lubrication and equipment setting drawings shall show the layout of all mechanical and electrical items on the bridge structure. Identify each lubrication point with an arrow and list lubricant type and frequency of lubrication. Lubrication of manufactured items shall be based on the manufacturer's recommendations.

Point to, and identify, mechanical and electrical items with pertinent set points, and list the set point values (e.g. Relief Valve, 1,500 psi).

These sheets should not be prepared until the final setup of the bridge has been completed.

1. Submittal Procedure: Submit lubrication and equipment setting drawings electronically to the Bridge Engineer for review. The electronic file shall be a single PDF file. For bidding purposes, allow a review period of 14 calendar days.

After review, rejected drawings will be stamped "Returned for Correction," will be initialed and dated by the reviewer, will have comments marked in red, and will be returned to the contractor electronically as a PDF file. Correct errors and resubmit electronically to the Bridge Engineer for review. This process will repeat until the Department has no comments. Lubrication and equipment setting drawings will then be stamped "Accepted in accordance with LSSRB 105.02," initialed and dated by the reviewer, and returned to the Contractor electronically as a PDF file.

2. Deliverables: Provide to the Bridge Engineer for distribution, one full scale paper reproduction of all lubrication and equipment setting drawings that have been stamped "Accepted in accordance with LSSRB 105.02." Print paper reproductions directly from the PDF file returned by the Department, and show the "Accepted in accordance with LSSRB 105.02" dated and initialed by the reviewer with no modifications, and laminate (10 mil min.).

Provide a 24 inch x 36 inch aluminum, outdoor, weatherproof poster frame with clear polycarbonate plastic cover for each 22 inch x 34 inch drawing. Submit frame to the Bridge Engineer for review. Hang framed drawings in the machinery room where indicated on the plans.

820.06.2 Manuals: For all movable bridge projects, prepare and submit the following manuals.

Cost of preparing and submitting the manuals shall be included in the pay items of Sections of 821, 822, and 823. The Department will withhold 5 percent of the bid price of all mechanical, electrical, and facility items (821, 822, and 823 items) until all manuals have been reviewed and accepted, and final paper reproductions have been received by the Department.

1. Bridge Operation Manual: Prepare and submit a Bridge Operation Manual to the Bridge Engineer for review.

This manual is a reference for the Bridge Operator, and it shall include a written description of span operation under normal conditions, a written description of span operation under all possible fault conditions, and a

troubleshooting guide. The Engineer of Record will supply the information in this manual to the contractor as a single PDF file.

Print and provide two paper reproductions of the Bridge Operation Manual to the Bridge Engineer for review. For bidding purposes, allow a review period of 21 calendar days.

Format shall be in accordance with "Paper Reproductions" and "Letter Size Sheets" from 801.05.2.2 except that sheets will not show an "Accepted in accordance with LSSRB 105.02" stamp.

Provide each manual with a white, premium, heavy duty, 3 D-ring binder with title sleeve. Binders shall be appropriately sized to hold enclosed material, and shall be extra wide to accommodate sheet protectors. Binders shall not be larger than 3 inches. Use multiple binders if necessary.

Provide each sheet with a top loading, 8 ½ inch x 11 inch, standard weight, clear, sheet protector. Fold half-scale plan sheets in half with printed material facing out, and insert in sheet protectors.

Provide a top loading, 8 ½ inch x 11 inch, standard weight, clear, tab index sheet protector with labeled tab to delineate sections.

If the paper reproductions of the Bridge Operation Manual are rejected after review, the title sheet of both copies will be stamped "Returned for Correction," and both copies will be returned to the contractor with instructions for corrections. Correct errors and resubmit to the Bridge Engineer for review. This process will repeat until the Department has no comments. The title sheet will then be stamped "Accepted in accordance with LSSRB 105.02," initialed and dated by the reviewer, and distributed by the Department.

2. Mechanical Operation and Maintenance Manual: See Section 821 for the Mechanical Operation and Maintenance Manual requirements.

3. Electrical Operation and Maintenance Manual: See Section 822 for the Electrical Operation and Maintenance Manual requirements.

820.07 CONSTRUCTION REQUIREMENTS.

820.07.1 Position of Movable Span during Construction: For new construction, the movable span(s) may be erected in the "open to navigation" or "closed to navigation" positions as allowed by the plans and the Project Engineer. At all times, construction must comply with the United States Coast Guard (USCG) permit or negotiated agreement with the USCG.

Maintain marine and vehicular traffic requirements and closures as specified in the plans.

820.07.2 Survey of Structural Elements: Perform all survey measurements of structural bridge elements that may be affected by temperature and sunlight in the early morning prior to development of a temperature differential in the structure.

820.07.3 Shop Assembly of Structural Steel: Shop assemble the structural steel for all movable spans in accordance with 807.04.10 and mark for reassembly in accordance with 807.04.24.

820.07.4 Construction Sequence: Adhere to construction sequencing specified herein unless otherwise specified on the plans. Any deviation from the construction sequencing must be submitted to the Bridge Engineer for review.

820.07.5 Concrete Test Blocks: Provide test blocks to determine the exact density (weight) of the concrete individually for the movable span deck (if applicable), the counterweight, and the balance blocks. All concrete shall be Class A unless otherwise noted on the plans. Cast test blocks early enough in the construction period such that the test data will be available when it is time for the contractor to perform counterweight calculations.

Casting and weighing test blocks must be performed in the presence of the Project Engineer. Notify the Project Engineer at least three working days in advance. Test blocks shall be of known volume, and shall contain at least one cubic foot (0.03 cu m) of concrete. For each concrete mixture, cast three test blocks. Record the exact concrete mixture used, and the weight of the test blocks the day they were cast. Continue to record the weight of each test block every day for at least seven days. If the weights are still changing after seven days, continue to record weights each day until the weights stabilize. Use the average weight of each set of three test blocks for the counterweight calculations.

For the movable span deck, select the mixture to be used and record the density for future use in the counterweight calculations.

Balance blocks have been standardized and shall weigh 80 - 85 pounds each, with a concrete unit weight of approximately 145 pounds per cubic foot. Continue to make test blocks until a mixture with this density is achieved. Record mixture for future use in casting balance blocks.

For the counterweight, concrete density shall not exceed 180 pounds per cubic foot. Record mixtures with several known densities for possible use in the counterweight.

820.07.6 Construction of Counterweight:

1. Counterweight Calculations and Shop Drawings: Counterweight dimensions shown on the plans are estimates based on an estimated design

weight of the movable span and an estimated concrete density for both the counterweight and the movable span deck. Prior to beginning construction of the counterweights, prepare and submit to the Bridge Engineer for review calculations and shop drawings that show the proposed construction of the counterweight and the proposed concrete density to be used. Calculations shall be based on the submitted shop drawings for the movable span structural steel, grid deck, concrete deck (including actual concrete density from test blocks), concrete reinforcing steel, barrier rails, sidewalks, counterweight wire ropes, balance chains, mechanical equipment, electrical equipment, nuts, bolts, washers, and any other appurtenances that are part of the movable span. Calculations shall show the center of gravity of the movable span and the counterweight if needed.

Maintain the method of construction shown on the plans and plan dimensions. In the event that the counterweight must be resized, shape and construction of counterweight shall be as similar to the plans as practical. If needed, add plate steel or steel billets to the counterweight to increase weight with approval of the Bridge Engineer. If used, they shall be uniformly distributed throughout the counterweight, individually supported within the counterweight, clean and free of oil or grease, and not galvanized or coated with other materials. Vertical clearance between the counterweight and the roadway shall be not less than 5 feet when the movable span is in the fully open position including allowable over-travel. Vertical clearance between the counterweight and any other obstruction (barrier rail, hand rail, etc.) shall be not less than 2 ½ feet in the fully open position, including allowable over-travel. In calculating minimum clearance, counterweight ropes shall be assumed to stretch 2 percent of their calculated length.

2. Counterweight Pockets: Size counterweight pockets to hold balance blocks equal to 15 percent of the weight of the counterweight. Calculations shall assume that the counterweight pockets are 1/3 full of balance blocks.

Any counterweight pocket exposed to rainwater shall have at least two drain holes that are at least 6 inches in diameter.

For vertical lift bridges, size counterweight pockets so that the balance blocks do not show above the sides of the pocket.

For bascule spans with counterweights that rotate with the movable span, position counterweight pockets to allow for adjustment of the center of gravity of the movable span. Counterweight pockets must securely hold balance blocks during operation of the movable span.

3. Balance Blocks: Fabricate balance blocks as shown on the plans and in a uniform manner using Class A concrete with a density of approximately

145 pounds per cubic foot as determined from the test blocks. Balance blocks shall weigh between 80 – 85 pounds to facilitate handling by a single worker. Weigh at least 10 percent of the balance blocks at random after they have cured to their final weight. Discard all balance blocks outside of this range, and continue weighing questionable balance blocks to the satisfaction of the Project Engineer.

Construct enough balance blocks to counterbalance the movable span when it is fully completed. A complete and balanced counterweight shall have at least 1 percent of its weight in balance blocks installed in the counterweight pockets, and at least an additional 1/2 percent of its weight in extra balance blocks to be stored on site as directed by the Project Engineer for future adjustment.

820.07.7 Installation of Alignment Critical Mechanical Equipment: Alignment critical mechanical equipment such as trunnion bearings, gears, drive shafts, gearboxes, brakes, shaft couplings, etc., shall be installed by millwrights experienced in the installation of the specified equipment. Use industry standard alignment equipment and techniques. Alignments shall meet tolerances specified in the Contract, or the manufacturer's minimum requirements, whichever is more stringent.

820.07.8 Temporary Operation and Maintenance of Movable Span: Provide qualified personnel to operate and maintain the movable bridge as directed below. All bridge operations shall be in accordance with the United States Coast Guard (USCG) permit or negotiated agreement with the USCG. While operating the movable bridge, the contractor is responsible for maintenance of the structure. In addition to 107.19, damages that are the result of either negligent operation or negligent maintenance are the responsibility of the contractor.

1. New Construction: Operate and maintain the movable span until the Department agrees to take final acceptance of the project. If the project utilizes a movable detour bridge during the construction of a new movable bridge, operate and maintain the detour bridge for the duration of the project.

2. Repair and Rehabilitation Projects: The Department will continue to operate and maintain the movable span during construction if the contractor is performing work away from the movable span such that neither his personnel nor his equipment could be harmed by its operation, and if the work being performed in no way affects the operation of the movable span. Once work begins on or within the limits of the movable span, or if the work affects the operation of the movable span, the contractor shall begin operating and maintaining the movable span. The Department's operator will remain in the

operator's house during normal operating times, and will continue to monitor the marine radio and log marine traffic, however, the contractor will be responsible for the actual operation of the movable span. If the work has involved the mechanical or electrical systems, or if the work has altered the operation of the movable span in any way, the contractor shall continue to operate the movable span until final acceptance of the project.

820.07.9 Final Setup, and Field Testing of Mechanical and Electrical Systems: Notify the Bridge Engineer 14 calendar days prior to final setup and field testing so the EOR may be present.

After installation of all mechanical and electrical systems has been completed and all weight that will remain on the movable span during operation is in place, adjust and test all mechanical and electrical systems as directed by the plans.

Prior to the inspection by the EOR, all mechanical and electrical systems shall be successfully adjusted and tested to the satisfaction of the Systems Integrator and the Project Engineer. On the day of the inspection, have personnel and equipment available to make any adjustments to the span that may be necessary such as troubleshooting and correcting the electrical system, and adjusting limit switches, buffers, span locks, brakes, time delay relays, balance blocks, relief valves, etc.

The cost of any additional inspections beyond one final and one follow-up inspection will be back-charged to the contractor.

820.07.10 Training: After the final inspection, setup, and testing of the mechanical and electrical systems have been completed, have experienced personnel provide the following training:

1. Training of Bridge Operators: Instruct Department bridge operators in the complete and correct operation of the movable span, including all fault conditions. The Bridge Operation Manual shall be the basis for this training.

Allow 14 calendar days notice for scheduling training sessions. Provide five days (eight hours each) for training sessions.

After the Department has accepted responsibility for operating the movable bridge, provide experienced personnel on two hour notice during operating hours to assist with operational problems for 30 calendar days.

2. Training of Bridge Maintenance Personnel: Instruct Department maintenance personnel as to the function, settings, adjustments, and lubrication of the mechanical and electrical systems. The Mechanical and Electrical Operation and Maintenance Manuals shall be the basis for this training.

Allow 14 calendar days notice for scheduling training sessions. Provide five days (eight hours each) for training sessions.

After the Department has accepted responsibility for maintaining the movable bridge, provide experienced personnel on two hours notice during operating hours to assist with operational/maintenance problems for 30 calendar days.

820.08 CONSTRUCTION REQUIREMENTS FOR SWING SPAN BRIDGES.

820.08.1 Construction of Approach Spans: Approach spans immediately adjacent to the movable span shall not be constructed until "End Lift Reactions and Elevations," 820.08.9 has been completed. Each approach span must match the elevation and profile of the movable span across the entire width of the roadway to within plus or minus 1/8 inch.

820.08.2 Installation of Center Pivot Bearing:

1. Installation of Anchor Bolts: Cast anchor bolts in the pivot pier with an embedded template as shown on the plans. Use survey equipment to locate template horizontally and vertically. No individual anchor bolt can be located more than plus or minus 1/4 inch from its specified location in all directions. Anchor bolts shall be vertical to within 0.5 degrees. Securely anchor template and monitor template locations while the pivot pier is placed and vibrated to assure no movement.

2. Installation of Center Pivot Bearing Base: After the pivot pier has met the requirements for form removal, orient the pivot bearing base on the anchor bolts as shown on the plans. Using the leveling screws provided, set the elevation of the top of the pivot bearing base to plus or minus 1/8 inch of the design elevation, and level in all directions with a machinist's level.

Coat leveling screws with lubricant to prevent adhesion to grout. Form up and grout under the pivot bearing base as shown on the plans using a pre-packaged non-shrink epoxy grout with a minimum seven day compressive strength of 13,000 psi. Follow grout manufacturer's installation instructions. Mix grout so it is flowable and self-leveling. Pour grout from one side of the form to prevent air from being trapped under the pivot bearing base in accordance with the manufacturer's recommendations. Grout shall have a minimum bearing contact area of 95 percent with the pivot bearing base. Packing grout under pivot bearing base is not allowed. Allow grout to cure for a minimum of two days before tightening anchor bolts and removing forms.

3. Assembly of Center Pivot Bearing: Notify the Bridge Engineer 14 calendar days prior to assembly of the center pivot bearing so the EOR may be present. Assembly must be performed on a clear, dry day.

Install the center pivot jacket on the center pivot base such that the sight gauge and fill pipe are oriented as shown on the plans. Torque bolts in accordance with the bolt specifications in Section 821. Thoroughly clean the inside of the jacket with an approved solvent to remove the protective grease applied by the shop. Use only clean, lint free rags. Wipe out solvent and apply a thin coating of the oil specified to lubricate the bearing. Similarly clean the steel disk bearing, coat with oil, and install in jacket without scratching or damaging the bearing surface. Clean the bronze disk bearing, coat with oil, and install in jacket without scratching or damaging the bearing surface. Install sight gauge and fill pipe. Add oil to the level shown on the plans. Apply the grease specified for the bearing seals to the outside of the jacket to assist with the installation of the bearing seals. Install the center pivot bearing top, and fully lubricate the seal cavity with grease. Remove leveling screws, and install steel set screws to fill hole.

4. Clean and Paint Pivot Bearing: Immediately after completing the installation of the center pivot bearing, clean the entire bearing assembly and complete the required mechanical paint system. Do not paint over name plates or sight gauge.

820.08.3 Erection of Bobtail Swing Span with Combination Concrete and Grid Deck: The following is a suggested sequence of construction that complies with the design of the movable span. Prior to construction, submit detailed erection drawings to the Bridge Engineer for review. As a minimum, the submittal shall show the sequence of construction, falsework construction, and counterweight/balance block calculations. Each time the erection blocking is adjusted, submit the blocking ordinates of the movable span to the Bridge Engineer for review.

Note that the movable span will not be balanced until the end of the erection process. All erection blocking adjustments to the movable span will be made in an unbalanced condition. Maintain stability of the movable span during construction, but allow vertical deflection as required by the erection process.

1. Erection of Pivot Girder: Check elevation of center pivot bearing top with acceptable survey equipment and adjust spacer plate if needed. Tolerance on plan elevation is plus or minus 1/8 inch. Place the pivot girder on the pivot bearing and check the elevation of the top flange. Adjust spacer plate if needed and complete connection.

2. Erection of Steel: Provide blocking under each end of the pivot girder. Provide pile supported falsework with blocking at both ends of the main girders. Provide pile supported falsework with blocking at field splices if needed. Falsework must be of sufficient strength and rigidity to support erection loading without deflection. Blocking shall be capable of adjusting to multiple profiles.

Set blocking such that the main girders match the plan "Camber" diagram. Check the profiles of each main girder on a regular basis throughout construction. Complete and finalize all span connections including main girder field splices, pivot girder, floor beams, stringers, and lateral bracing.

Adjust blocking to allow the span to fully deflect. All steel dead load will be supported by the pivot girder. Measure deflection and compare to the plan "Steel Dead Load" diagram. Submit measurements to the Bridge Engineer for review.

3. Construction of Counterweight and Placement of Grid Deck Panels: Conform to 820.07.6. Construct forms and place counterweight concrete in one continuous placement. Place grid deck panels on the span, but do not connect the grid deck panels to the bridge structure. Remove forms after the counterweight has met requirements for form removal in 805.07.

4. Placement of Concrete Deck: Adjust blocking to match the plan "Steel, Deck, and Counterweight Dead Load" diagram. Construct forms and place concrete in one continuous placement. Remove forms after the concrete deck has met requirements for form removal in 805.07.

5. Connection of Grid Deck Panels: Adjust blocking such that the plan finish grade is obtained. Connect the grid deck panels to the bridge structure as shown on the plans. After connection of the grid deck is completed, place concrete fill in specified areas.

6. Installation of Bridge Railings, Mechanical Equipment, and Balance Blocks: Set and complete bridge railings, install all mechanical equipment, and add balance blocks to balance the movable span.

820.08.4 Erection of Bobtail Swing Span with All Concrete Deck: The following is a suggested sequence of construction that complies with the design of the movable span. Prior to construction, submit detailed erection drawings to the Bridge Engineer for review. As a minimum, the submittal shall show the sequence of construction, falsework construction, and counterweight/balance block calculations. Each time the erection blocking is adjusted, submit the blocking ordinates of the movable span to the Bridge Engineer for review.

Note that the movable span will not be balanced until the end of the erection process. All erection blocking adjustments to the movable span will be made in an unbalanced condition. Maintain stability of the movable span during construction, but allow vertical deflection as required by the erection process.

1. Erection of Pivot Girder: Check elevation of center pivot bearing top with acceptable survey equipment and adjust spacer plate if needed. Tolerance on plan elevation is plus or minus 1/8 inch. Place the pivot girder on the pivot bearing and check the elevation of the top flange. Adjust spacer plate if needed and complete connection.

2. Erection of Steel: Provide blocking under each end of the pivot girder. Provide pile supported falsework with blocking at both ends of the main girders. Provide pile supported falsework with blocking at field splices if needed. Falsework must be of sufficient strength and rigidity to support erection loading without deflection. Blocking shall be capable of adjusting to multiple profiles.

Set blocking such that the main girders match the plan "Camber" diagram. Check the profiles of each main girder on a regular basis throughout construction. Complete and finalize all span connections including main girder field splices, pivot girder, floor beams, stringers, and lateral bracing.

Adjust blocking to allow the span to fully deflect. All steel dead load will be supported by the pivot girder. Measure deflection and compare to the plan "Steel Dead Load" diagram. Submit measurements to the Bridge Engineer for review.

3. Construction of Counterweight: Conform to 820.07.6. Construct forms and place the counterweight concrete in one continuous placement. Remove forms after the counterweight has met requirements for form removal in 805.07.

4. Placement of Concrete Deck: Adjust blocking to match the plan "Steel, Deck, and Counterweight Dead Load" diagram. Construct forms and place concrete in one continuous placement except for the specified closure placement. Remove forms after the concrete deck has met requirements for form removal in 805.07.

5. Installation of Bridge Railings: Adjust blocking such that the plan finish grade is obtained. Set and complete bridge railings, install all mechanical equipment, and add balance blocks to balance the movable span.

6. Concrete Closure Placement: Adjust blocking to allow the span to fully deflect. All dead load shall be supported by the pivot bearing. Complete the closure placement on the bridge deck as shown on the plans. Remove

forms after the closure placement has met requirements for form removal in 805.07.

820.08.5 Erection of Equal Arm Swing Span with All Concrete Deck: The following is a suggested sequence of construction that complies with the design of the movable span. Prior to construction, submit detailed erection drawings to the Bridge Engineer for review. As a minimum, the submittal shall show the sequence of construction, falsework construction, and balance block calculations. Each time the erection blocking is adjusted, submit the blocking ordinates of the movable span to the Bridge Engineer for review.

Maintain stability of the movable span during construction, but allow vertical deflection as required by the erection process.

1. Erection of Pivot Girder: Check elevation of center pivot bearing top with survey equipment and adjust spacer plate if needed. Tolerance on plan elevation is plus or minus 1/8 inch. Place the pivot girder on the pivot bearing and check the elevation of the top flange. Adjust spacer plate if needed and complete connection.

2. Erection of Steel: Provide blocking under each end of the pivot girder. Provide pile supported falsework with blocking at both ends of the main girders. Provide pile supported falsework with blocking at field splices if needed. Falsework must be of sufficient strength and rigidity to support erection loading without deflection. Blocking shall be capable of adjusting to multiple profiles.

Set blocking such that the main girders match the plan "Camber" diagram. Check the profiles of each main girder on a regular basis throughout construction. Complete and finalize all span connections including main girder field splices, pivot girder, floor beams, stringers, and lateral bracing.

Adjust blocking to allow the span to fully deflect. All steel dead load will be supported by the pivot girder. Measure deflection and compare to the plan "Steel Dead Load" diagram. Submit measurements to the Bridge Engineer for review.

3. Placement of Concrete Deck: Adjust blocking to match the plan "Steel and Deck Dead Load" diagram. Construct forms and place concrete in one continuous placement except for the specified closure placement. Remove forms after the concrete deck has met requirements for form removal in 805.07.

4. Installation of Bridge Railings, Mechanical Equipment and Balance Blocks: Adjust blocking such that the plan finished grade is obtained. Set and complete bridge railings, install all mechanical equipment, and add balance blocks to balance the movable span.

5. Concrete Closure Placement: Adjust blocking to allow the span to fully deflect. All dead load shall be supported by the pivot bearing. Complete the closure placement on the bridge deck as shown on the plans. Remove forms after the closure placement has met requirements for form removal in 805.07.

820.08.6 Erection of Equal Arm Swing Span with Grid Deck: The following is a suggested sequence of construction that complies with the design of the movable span. Prior to construction, submit detailed erection drawings to the Bridge Engineer for review. As a minimum, the submittal shall show the sequence of construction, falsework construction, and balance block calculations. Each time the erection blocking is adjusted, submit the blocking ordinates of the movable span to the Bridge Engineer for review.

Maintain stability of the movable span during construction, but allow vertical deflection as required by the erection process.

1. Erection of Pivot Girder: Check elevation of center pivot bearing top with acceptable survey equipment and adjust spacer plate if needed. Tolerance on plan elevation is plus or minus 1/8 inch. Place the pivot girder on the pivot bearing and check the elevation of the top flange. Adjust spacer plate if needed and complete connection.

2. Erection of Steel: Provide blocking under each end of the pivot girder. Provide pile supported falsework with blocking at both ends of the main girders. Provide pile supported falsework with blocking at field splices if needed. Falsework must be of sufficient strength and rigidity to support erection loading without deflection. Blocking shall be capable of adjusting to multiple profiles.

Set blocking such that the main girders match the plan "Camber" diagram. Check the profiles of each main girder on a regular basis throughout construction. Complete and finalize all span connections including main girder field splices, pivot girder, floor beams, stringers, and lateral bracing.

Adjust blocking to allow the span to fully deflect. All steel dead load will be supported by the pivot girder. Measure deflection and compare to the plan "Steel Dead Load" diagram. Submit measurements to the Bridge Engineer for review.

3. Installation of Grid Deck Panels: Adjust blocking such that the plan finish grade is obtained. Place and connect the grid deck panels to the bridge structure as shown on the plans. After connection of the grid deck is completed, place concrete fill in specified areas.

4. Installation of Bridge Railings, Mechanical Equipment and Balance Blocks: Set and complete bridge railings, install all mechanical equipment, and add balance blocks to balance the movable span.

820.08.7 Rack and Pinion Installation (Swing Span): For swing span bridges with rack and pinion gears, installation requirements are similar to the requirements for vertical lift bridge rack and pinion gears.

820.08.8 Span Balancing (Swing Span): Perform span balancing in the morning when the effects of temperature on the main girders are at a minimum. Do not perform span balancing during wind that could cause the balance wheels to contact with the track.

After the movable span is fully constructed, including all mechanical and electrical equipment, and deflected under dead load, adjust the balance wheels to have a 1/2-to 3/4-inch gap between the balance wheels and the track.

Check the vertical profile ordinates of both main girders and compare with the ordinates shown in the plans for the span swinging freely with equal end lifts. Adjust balance blocks, swing the span open and closed, and recheck ordinates. Repeat until the ordinates match the ordinates shown on the plans as close as achievable. Operate the span multiple times and recheck ordinates to ensure the results are repeatable.

Adjust balance wheels to have a minimum 1/16-inch gap with the track at all times during the operation of the span. Swing the span open and closed. If at any point the gap between the balance wheels and the track exceeds 3/16 inch, that portion of the track must be re-leveled.

820.08.9 End Lift Reactions and Elevations (Swing Span): Notify the Bridge Engineer 14 calendar days prior to measuring the end lift reactions so the EOR or a designated representative may be present. Measurement of end lift reactions and elevations shall be performed after span balancing has been completed.

Submit cut sheets to the Bridge Engineer for review of hydraulic jacks and pressure gauges. Select jack size so that the expected load will register between 2,000 and 4,000 psi. Use 0-5,000 psi digital pressure gauges with an accuracy of ± 0.25 percent full scale. New gauges shall come with NIST certification. Used gauges shall be newly certified. Power units shall be capable of holding the load for the duration of the measurement process without significant leakage of hydraulic fluid.

Use two identical hydraulic jacks with known bore sizes for the long arm, and two identical hydraulic jacks with known bore sizes for the short arm. All four jacks shall be the same size for an equal arm span. Locate the jacks at the end lift locations as shown on the plans. Each jack shall be connected to a

separate power unit. Pressure gauges should be mounted directly to the jacks, if possible. Otherwise, pressure gauges shall be located as close to the jacks as practical. Jacks must be completely free of air before measurement.

Measure end lift reactions in the morning when the effects of temperature on the main girders are at a minimum. Jack all four corners of the span simultaneously until design reactions are achieved. Allow time for pressure readings to stabilize. Monitor elevations to ensure that each corner is lifting correctly. Survey roadway surface elevations at each gutter line, the profile grade line at each end of the span, and at the pivot girder location. Tolerances between survey and plan elevations are ± 1/4 inch at span ends and ± 3/8 inch at the pivot girder location. If elevations are not within tolerances, adjust spacer plate under the pivot girder while weighing the span under 820.08.10 and repeat the process until tolerance is achieved.

After end lift elevations have been determined, construct risers for end wedge shoes and install/shim the end wedge shoes to meet elevations. At this point, approach spans adjacent to the movable span may be constructed to match movable span elevations.

820.08.10 Weighing the Movable Span (Swing Span): Notify the Bridge Engineer 14 calendar days prior to weighing the movable span so the EOR or a designated representative may be present. Weighing of the movable span shall be performed after measurement of end lift reactions has been completed. Spacer plate under the pivot girder can be adjusted at this time if required.

Submit Cut Sheets for hydraulic jacks and pressure gauges to the Bridge Engineer for review. Select jack size so that the expected load will register between 6,000 and 8,000 psi. Use 0-10,000 psi digital pressure gauges with an accuracy of ± 0.25 percent full scale. New gauges shall come with NIST certification. Used gauges shall be newly certified.

Use two identical hydraulic jacks with known bore sizes, and locate them under the pivot girder where shown on the plans. Each jack should be connected to a separate power unit. Power units shall be capable of holding the load for the duration of the weighing process without significant leakage of hydraulic fluid. Pressure gauges should be mounted directly to the jacks if possible. Otherwise, pressure gauges shall be located as close to the jacks as practical. Jacks shall be completely free of air before measurement.

Retract wedges and raise the span until all load has been removed from the pivot bearing. Allow time for pressure readings to stabilize. Record readings and repeat two more times. Measurements are good if they are within 1 percent of each other. Submit pressure readings to the Bridge Engineer for

review. Actual span weight shall not differ from the design weight by more than ± 5 percent.

If an adjustment needs to be made to the pivot girder elevation during this procedure, remove the existing spacer plate while jacking the span and replace with a single spacer plate machined to the required thickness.

820.09 CONSTRUCTION REQUIREMENTS FOR VERTICAL LIFT SPAN BRIDGES.

820.09.1 Construction of Approach Spans: Approach spans immediately adjacent to the movable span shall not be constructed until "Installation of Bearing Shoes," 820.09.10 has been completed. Each approach span must match the elevation and profile of the movable span across the entire width of the roadway to within ± 1/8 inch.

820.09.2 Tolerances for Lift Towers: For either concrete or steel tower vertical lift bridges, all lines, surfaces, corners, arises, and elements of the lift towers shall be within ± 1/4 inch in any 10 foot section and not more than ± 1/2 inch for the entire length of the tower for towers less than 100 feet and ± 3/4 inch for towers greater than 100 feet of the plan dimension.

For concrete lift towers, survey towers after each placement and before any further construction on that leg occurs. If at any point the tower does not meet the required tolerances, submit a contractor proposal with recommendations for remediation which may include removal and replacement of the tower.

For steel lift towers, survey towers continually during construction. If at any point during construction the tower does not meet the required tolerances, submit a contractor proposal with recommendations for remediation, which may include removal and re-fabrication of structural members.

820.09.3 Installation of Sheave Assemblies (Concrete Towers): Do not transport sheave assemblies to the project site until it is time to install them in their permanent locations on the sheave pedestals. Sheave assemblies shall come from the shop complete with trunnions, trunnion bearings, and sheave gear installed. Sheave gears shall come from the shop coated with a dry, rust-inhibiting grease. Do not remove this grease until installation of the pinion gear.

1. Installation of Anchor Bolts: Cast in place anchor bolts for the sheave pedestals with an embedded template as shown on the plans. Use survey equipment to locate templates horizontally and vertically. All four templates must be square to each other and at the same elevation ±1/2 inch. No individual anchor bolt can be located more than 1/2 inches from its specified location in all directions. Anchor bolts shall be vertical to within 0.5

degrees. Securely anchor template and monitor template locations while the concrete deck is placed and vibrated to assure no movement.

2. Installation of Sheave Pedestals: After both machinery decks have met the requirements for form removal, survey the elevations of all four sheave locations to determine the highest location. Place the first sheave pedestal at this location. Using the leveling screws provided, set the elevation of the top of the sheave pedestal to ±1/16 inch of the design elevation. Adjust pedestal elevation, if needed, to allow for a minimum 2-inch grout pad. Level pedestal in all directions with a machinist's level.

Install remaining three sheave pedestals, and adjust the elevations of these pedestals to match the elevation of the first pedestal. This should require these pedestals to have a grout pad greater than 2 inches. Level all pedestals with a machinist's level. The Project Engineer will verify all pedestal elevations. Submit elevations to the Bridge Engineer for review. All elevations shall be accurate to within ±1/16 inch.

Coat leveling screws with lubricant to prevent adhesion of grout. Form up and grout under the sheave pedestals as shown on the plans using a pre-packaged non-shrink epoxy grout with a minimum seven day compressive strength of 13,000 psi. Mix grout to be flowable and self-leveling. Install in accordance with the grout manufacturer's instructions to achieve 95 percent minimum bearing contact area with the base plate of the sheave pedestal. Pour grout from one side of the form to prevent air from being trapped under the sheave pedestal. Packing grout under sheave pedestal is not allowed. Allow grout to cure for a minimum of 48 hours or as recommended by the grout manufacturer before tightening anchor bolts and removing forms. Back off leveling screws and lock in place with jam nuts.

3. Alignment of Sheave Assemblies: Submit to the Bridge Engineer for review the means and methods for alignment and survey of sheaves. Place sheave assemblies on sheave pedestals. Use survey equipment to position sheave assemblies relative to specified control dimensions.

After positioning sheaves, but prior to installing turned bolts/fitted pins in the trunnion bearings, submit survey data to the Bridge Engineer for review. Submitted data shall show the following:

a. Sheaves on opposite towers are parallel and in the same plane.

b. Trunnions of sheaves on the same tower are aligned vertically and horizontally.

c. Sheaves on the same tower are the correct distance apart and the correct distance from the centerline of the bridge.

d. Sheaves on opposite towers are the correct distance apart and the correct distance from the centerline of the channel.

e. The diagonal distances between the sheaves are equal.

All distances shall be accurate to within ± 1/8 inch.

After review of the data, a representative of the EOR will schedule a site visit to verify sheave placement. Be prepared to demonstrate the submitted data with survey equipment and other measurement devices. After sheave placement has been verified, install turned bolts/fitted pins in trunnion bearings.

4. Determination of Maximum Gear Runout: Prior to installing the counterweight wire ropes, determine the maximum and minimum gear runout on each sheave. Record this data and submit to the Bridge Engineer for review. Mark the tooth with the maximum runout and lock the sheave such that the tooth with the maximum runout is aligned with the future placement of the pinion gear.

5. Clean Sheave Assemblies and Apply Touch-up Paint: Immediately after completing the installation of the sheave assemblies, clean sheave assemblies and pedestals, and touch up paint where damaged. Do not remove the protective grease from or paint the face of the sheave gear teeth.

820.09.4 Installation of Sheave Assemblies (Steel Towers): Use the same installation procedure as 820.09.3 "Installation of Sheave Assemblies (Concrete Towers)" except as follows:

1. Installation of Sheave Pedestals: Survey area of machinery deck where sheave pedestals will be located. Machinery deck plate steel must be flat to within ±1/16 inch in all locations under the pedestals. Project Engineer must verify flatness measurements. Install all four sheave pedestals.

Use survey equipment to determine the elevation of the top of each sheave pedestal. Project Engineer must verify elevation measurements. Calculate the thickness for a single spacer plate on each sheave pedestal (eight plates) to bring the sheave pedestal elevations to the design elevation. Submit shop drawings for the spacer plates to the Bridge Engineer for review. Shop drawings shall show current pedestal elevations. After completing the review process, fabricate and install spacer plates. Re-survey sheave pedestal elevations and submit the data to the Bridge Engineer for review. All final elevations shall be within ± 1/16 inch of the design elevations.

820.09.5 Construction of Counterweight (Vertical Lift): Construct the counterweights in accordance with the plans and 820.07.6, "Construction of Counterweight." Construct forms and place the

counterweight concrete. Remove forms after the counterweight has met requirements for form removal.

820.09.6 Installation of Counterweight Wire Ropes (Vertical Lift): At all times during the installation process, handle counterweight wire ropes (CWR's) in accordance with the wire rope manufacturer's recommendations. Kinks in the CWR's will be cause for rejection. Orient CWR's on the sheave as shown on the plans and without twisting.

1. Alignment of Counterweight Wire Ropes: After all CWR's have been placed on the sheave and attached to both the counterweight and the movable span lift girder, adjust threaded rods on the span sockets such that the tops of all shims are level, but not bearing on the steel frame as shown on the plans.

If sockets are painted, clean sockets and apply an additional top coat of paint to all sockets after completing installation.

Complete construction of the movable span including the concrete/grid roadway deck, sidewalks, and traffic barriers, and all mechanical items such as the span lock catches, buffers, and bearing feet.

2. Initial Tensioning of Counterweight Wire Ropes: Prepare and submit to the Bridge Engineer for review a method for measuring the tension in the wire ropes. Notify the Bridge Engineer 14 calendar days prior to tensioning of the CWR's so the EOR or a designated representative may be present. After the movable span is fully constructed, measure and adjust the tension in the CWR's until they are within ± 8 percent of each other.

Prepare a report describing the measurement method and all measurement data. Submit the report to the Bridge Engineer for review.

820.09.7 Installation of Span Drive Machinery and Pinion Gears. (Vertical Lift): Install the span drive machinery on the machinery deck as shown on the plans. All machinery shall be installed by a millwright and shall be aligned to within tolerances shown on the plans and industry standards for equipment of this type, whichever is more stringent. Do not begin to install span drive machinery until the movable span nears completion. Turned bolts/fitted pins for pinion shaft bearings shall not be installed until the sheave is fully loaded with the weight of the completed movable span and counterweight.

1. Installation of Span Drive Machinery: Sheaves should still be locked in position, and the sheave gear teeth with the maximum runout should still be in position to mate with the pinion gears. Without removing the protective grease on the pinion gear or the sheave gear that was applied in the shop, perform a preliminary alignment of the pinion gears. Locate and install

the span drive machinery base by aligning with the pinion shafts. Span drive machinery base and pillow block bearing supports shall be installed as shown on the plans, and in a similar method as the sheave pedestals. Install all span drive machinery. Fully lubricate all bearings, gearboxes, couplings, and seals.

2. Alignment of Pinion Gears: After the sheave has the full load of the completed movable span and counterweight, remove the protective grease from the pinion and sheave gears. Fully align the pinion gear so that the backlash is near the lower end of the range shown on the plans. Backlash at each end of a tooth shall be equal. Install undersized bolts, and use chock blocks as shown on the plans to fix the pinion bearings in place. Do not install turned bolts/fitted pins at this time.

Apply non-drying gear bluing compound to the entire sheave gear. Unlock sheave, rotate one full revolution, and inspect tooth contact. For acceptable gear contact, 80 percent of the teeth shall have 80 percent contact along the face of the teeth, and no teeth shall have less than 50 percent contact. If tooth contact does not meet this requirement, adjust pinion alignment and retest. Repeat until gear alignment meets both the backlash and tooth contact requirements.

Record all backlash measurements (all sheaves and both ends of the teeth) and take pictures of the tooth contact. Pictures shall show teeth with best contact and worst contact. Submit data to the Bridge Engineer for review.

3. Site Inspection to Check Pinion Gear Alignment: Provide a 14 calendar day notice to the Bridge Engineer to schedule a site inspection to verify pinion gear alignment. At site inspection, repeat tooth contact test on all four pinion gears and demonstrate backlash measurements with feeler gauges.

4. Installation of Turned Bolts/Fitted Pins: Once gear alignment has been verified, install turned bolts/fitted pins in the pinion bearings as shown on the plans.

5. Clean Sheave Assemblies, Paint, and Lubricate: After installing fitted pins, thoroughly clean entire sheave assembly, including all gear teeth and sheave pedestals. Complete the mechanical paint system. Do not paint the face of gear teeth. After the paint has dried, apply the specified gear grease to the sheave and pinion gears.

820.09.8 Weighing of Counterweight and Movable Span (Vertical Lift): After the turned bolts/fitted pins have been installed in the pinion bearings, use the following procedure to weigh the counterweight and the movable span or submit an alternate method to the Bridge Engineer for review. Notify the Bridge Engineer 14 calendar days prior to weighing the counterweight and the movable span so the EOR or a designated

representative may be present. Weighing of the counterweight and movable span shall be performed after construction of both is fully complete.

Submit cut sheets for hydraulic jacks and pressure gauges to the Bridge Engineer for review. Select jack size so that the expected load will register between 6,000 and 8,000 psi. Use 0-10,000 psi digital pressure gauges with an accuracy of ± 0.25 percent full scale. New gauges shall come with N.I.S.T. certification. Used gauges shall be newly certified.

1. Weigh Counterweight: Jack counterweight using the jacking frame shown on the plans. Use four identical hydraulic jacks with known bore sizes. Connect each pair of jacks to a separate power unit. Power units shall be capable of holding the load for the duration of the weighing process without leakage of hydraulic fluid. Each jack shall have its own pressure gauge, and the gauge should be mounted directly to the jack if possible. Otherwise, locate pressure gauges as close to the jacks as possible. Jacks shall be completely free of air before measurement.

Jack counterweight until all tension is removed from the counterweight wire ropes. Allow time for pressure readings to stabilize. Record readings and repeat two more times. Measurements are acceptable if they are within one percent of each other. Submit pressure readings to the Bridge Engineer for review.

2. Weigh Movable Span: Weigh the movable span with the counterweight suspended from the towers by the jacking rods. Place jacks at each corner of the movable span as shown on the plans. Use four identical hydraulic jacks with known bore sizes. Connect each jack to a separate power unit. Power units shall be capable of holding the load for the duration of the weighing process without leakage of hydraulic fluid. Each jack shall have its own pressure gauge, and the gauge should be mounted directly to the jack if possible. Otherwise, locate pressure gauges as close to the jacks as possible. Jacks must be completely free of air before measurement.

Jack all four corners of the movable span until there is a minimum of 1/4 inch of separation from the bearing shoes. All four corners must be jacked the same height. Allow time for pressure readings to stabilize. Record readings and repeat two more times. Measurements are acceptable if they are within one percent of each other. Submit pressure readings to the Bridge Engineer for review. Actual span weight shall not vary from the design weight by more than ± 5 percent.

820.09.9 Balance Movable Span (Vertical Lift): Using the weights measured for the movable span and the counterweight, adjust the balance blocks so that the movable span is 1,500 pounds span heavy per corner. This

is a starting point. Further adjustments to the span balance may need to be made to achieve proper performance. Maintain a record of all balance block adjustments.

820.09.10 Installation of Bearing Shoes (Vertical Lift): Lower the movable span so that the bearing feet contact the main piers. Mark location for bearing shoes on the main pier, and drill in place anchor bolts as shown on the plans. Use a template to space anchor bolts and to hold anchor bolts vertical. Using a non-shrink epoxy grout, form up and install grout pads under bearing shoes as shown on the plans, and in a similar manner as for the sheave pedestals, level bearing shoes with a machinist level. Bearing shoe elevations shall be accurate to within ± 1/16 inch. Entire length of bearing feet shall contact the bearing shoes. Grind bearing feet and repaint as required.

820.09.11 Installation of Span and Counterweight Guide Rails (Vertical Lift): Install span and counterweight guide rails as shown on the plans. Guide rails shall be vertical to within ± 1/8 inch along the entire length of the rail. Guide rail splices shall mate flush. Roller guides shall not ride on guide rails during operation when there is no wind.

820.09.12 Installation of Span Locks (Vertical Lift): Span lock catch shall have already been installed on the movable span. Locate span lock base and drill in place anchor bolts as shown on the plans. Use a template to space anchor bolts and to hold anchor bolts vertical. Using an epoxy grout from the Approved Materials List, form up and install grout pads under span lock bases as shown on the plans, and in a similar manner as the sheave pedestals. Level span lock bases with a machinist level. Span lock base elevations shall be accurate to within ± 1/16 inch. Locate span lock on base such that the center of the latch, when extended, is over the center of the catch when the latch is horizontal. Shim span lock so that there is a 1/16-inch gap between the latch and the catch when the latch is extended. Adjust limit switches so that the span lock latch is fully inside the enclosure when retracted and horizontal when extended.

820.09.13 Installation of Air Buffers (Vertical Lift): Install air buffers as shown on the plans and thoroughly lubricate. Provide air pressure gauges (0-300psi) and install in place of the oilers. Operate span and adjust air valves until the span seats gently and all buffers see approximately the same maximum pressure. This should be between 75 and 100 psi. Be prepared to demonstrate pressure settings during final setup and inspection, and have personnel and tools available to make additional adjustments at that time. After air buffer operation has been accepted, match mark the air valve position and install oilers.

820.10 CONSTRUCTION REQUIREMENTS FOR BASCULE SPAN BRIDGES.

820.10.1 Construction of Approach Spans: Approach spans immediately adjacent to the movable span shall not be constructed until construction of the movable spans is completed. Each approach span must match the elevation and profile of the movable span across the entire width of the roadway to within ± 1/8 inch.

820.10.2 Alignment of Span Trunnion Bearings (Bascule): Span trunnion bearing supports must have a surface flatness of 0.010 inches under the entire footprint of the span trunnion bearing housing and must be level to the accuracy of a machinist's level. Field machine, if necessary, to meet these requirements. Shim the span trunnion bearings to the design elevations and align using a piano wire, laser, or other approved method.

820.10.3 Alignment of Movable Span(s) (Bascule): Hold trusses or girders of bascule span(s) erected in the open position to the correct alignment by the use of struts, braces, guy-wires or other approved methods. Drilling and reaming of bolt holes for lateral bracing may be performed after lowering the bascule span(s) to allow adjustment of alignment in the closed position. For double leaf bascule spans, the two spans must be aligned to within the allowable tolerances of the span locks in the closed position, and the two spans must match the elevation and profile of each other across the entire width of the roadway to within ± 1/8 inch. Do not install the turned bolts/fitted pins in the span trunnion bearings until alignment of the bascule span(s) in the open and closed positions has been verified.

820.10.4 Balancing of the Movable Span (Bascule): Use the strain gauge balancing method to balance the movable span(s). Adjust balance blocks to achieve a balance condition of 3,000 pounds "toe" or "tip" heavy in the closed position and neutral in the open position.

820.11 MEASUREMENT. Except as defined below, measurement for movable bridge components shall be made in accordance with its respective Section.

Measurement includes all equipment, materials, labor, tools, and incidentals necessary to complete this item.

1. Temporary Operation and Maintenance of Movable Span: Operation and maintenance of the movable span during construction will be measured on a lump sum or per day basis. A billable day is when the bridge is operated for more than twelve hours.

2. Weighing and Balancing of Movable Span: Weighing and balancing of the Movable Span will be measured on a lump sum basis.

3. Final Setup and Field Testing: Final setup and field testing will be measured on a lump sum basis.

4. Training: Training of bridge operators and maintenance personnel will be measured on a lump sum basis.

5. Manuals: Preparing and submitting manuals will not be measured for payment. The cost is to be included in the mechanical, electrical, and facility items shown on the plans.

820.12 PAYMENT. Payment will be made at the Contract unit price which includes all equipment, materials, labor, tools, and incidentals necessary to complete the item.

Cost of preparing and submitting the manuals shall be included in the pay items of Sections of 821, 822, and 823. The Department will withhold 5 percent of the bid price of all mechanical, electrical, and facility items (821, 822, and 823 items) until all manuals have been reviewed and accepted, and final paper reproductions have been received by the Department.

Payment will be made under:

Item No.	Pay Item	Pay Unit
820-01	Temporary Operation & Maintenance of Movable Span	Lump Sum
820-02	Temporary Operation & Maintenance of Movable Span	Day
820-03	Weighing and Balancing of Movable Span	Lump Sum
820-04	Final Setup and Field Testing	Lump Sum
820-05	Training	Lump Sum

Section 821
Mechanical Systems

821.01 DESCRIPTION. Provide all material, equipment, tools, measuring devices, and labor to purchase/fabricate, shop test, transport, install/erect, align/adjust, paint, lubricate, field test, and set-up all Mechanical Items/Systems as specified herein.

These specification govern both new construction projects and rehabilitation/ repair projects.

821.02 ACRONYMS AND ABBREVIATIONS. See 101.02 and 801.02 for additional acronyms and abbreviations.

ASJ	All Service Jacket
BOD	Biological Oxygen Demand
BTU	British Thermal Unit
CFM	Cubic Feet per Minute
CMU	Concrete Masonry Unit
CWP	Cold Working Pressure
GPM	Gallons per Minute
EPDM	Ethylene Propylene Diene Monomer
EEIPS	Double Extra Improved Plow Steel
EIPS	Extra Improved Plow Steel
FKM	Fluorocarbon Elastomer
FSK	Foil-Scrim Kraft
HFC	Hard Fiber Core
HPU	Hydraulic Power Unit
HVAC	Heating, Ventilation, and Air Conditioning
IWRC	Independent Wire Rope Core
MDFT	Minimum Dry Film Thickness
MERV	Minimum Efficiency Reporting Value
NIST	National Institute of Standards and Technology
NPS	Nominal Pipe Size
NRTL	Nationally Recognized Testing Laboratories
PE	Polyethylene
PVC	Polyvinyl Chloride
PVDF	Polyvinylidene Diflouride
RPM	Revolutions Per Minute

SBS	Styrene-Butadiene-Styrene
TEFC	Totally Enclosed Fan Cooled
TENV	Totally Enclosed Non-Ventilated
UNC	Unified National Coarse
VOC	Volatile Organic Compound

821.03 DEFINITIONS. See 101.03, 801.03, 820.03, and 822.03 for additional definitions.

ACR Tubing. Air-conditioning and refrigeration field service copper tubing.

Bright Wire Rope. Wire rope with no coatings.

Center Wires. Wires positioned at the center of a strand in a wire rope. See ASTM A1023, 3.6.4.1

Counterweight Ropes for Movable Barriers. Wire ropes that connect the movable barrier to the counterweight. Consists of a specified length of wire rope with sockets permanently attached at each end.

Counterweight Ropes for Vertical Lift Bridges. Wire ropes that connect the movable span of a vertical lift bridge to the counterweight. It consists of a specified length of wire rope with sockets permanently attached at each end.

Drawn-Galvanized Wire. Zinc coating applied prior to the final cold drawing operation of a wire. See ASTM A1007, 3.1.3.

Escutcheon. An escutcheon is a plate or ring formed to cover a gap between a penetrating pipe or valve and the finished wall surface from which it protrudes.

Filler Wires. Smaller, non-load bearing wires in a wire rope. Provides support for subsequent layers of wires. See ASTM A1023, 3.6.2.1.

Final-Galvanized Wire. Zinc coating applied after the final cold drawing operation of a wire that is galvanized at the final size of the wire. See ASTM A1007, 3.1.6.

Fitted Pin. Used for turned bolts larger than 1 1/2 inch diameter. A fabricated fastener that is threaded on both ends and whose shank is machined to a high tolerance to provide a tight (LC6) fit with the hole.

Fluorocarbon Elastomer (FKM). Shaft and O-ring seal material. When available, all shaft and O-ring seals shall be 100 percent FKM in accordance with ASTM D1418, (trade name "Viton").

Flux. A strong cleaning agent which cleans oxidized copper.

Galvanized. Unless otherwise specified, all galvanizing shall be hot dipped in accordance with ASTM A123.

Hydronic. Hydronic is the use of water as the heat-transfer medium in heating and cooling systems.

Inner Wires. All wires except filler wires, center wires, core wires, and outer wires in a wire rope. See ASTM A1023, 3.6.4.3.

Main Wires. Load bearing wires in a wire rope. See ASTM A1023, 3.6.2.2.

Marine Duty Stainless Steel. Any of the following stainless steel types: 201, 202, 205, 301, 302, 302B, 304, 304H, 304L, 304N, 305, 308, 309, 309S, 310, 310S, 314, 316, 316F, 316H, 316L, 316N, 317, 317L, 321, 321H, 329, 330, 347, 347H, 348, 348H, 384, 434, 436, 446, 431, 15-5 PH, 17-4 PH, 17-7 PH.

Operating Ropes. Wire ropes that are part of the drive system of a movable bridge or a movable barrier.

Outer Wires. All wires in the outer layer of the outer strand of a wire rope. See ASTM A1023, 3.6.4.4

Prestretching. A process for stretching a wire rope prior to measuring so that a more accurate measurement can be made. See ASTM A1023, 3.10.

Production Length. A length of wire rope that is manufactured in one continuous operation from one setting of one stranding machine and one setting of one closing machine. See ASTM A1023, 8.3.

Rope Core. Central element of a wire rope that supports the strands. See ASTM A1023, 3.3, 3.3.1, 3.3.2.

Rope Lay. Describes both the direction of the twist of the wires in a strand of a wire rope, and the direction that the strands are laid in a wire rope. See ASTM A1023, 3.16.

Sockets. Steel fittings permanently attached to the end of a wire rope to facilitate connection to a structure.

Strand. An assembly of main wires and filler wires. Multiple strands are used to fabricate a wire rope. See ASTM A1023, 3.4

Turned Bolt. A bolt where the shank has been machined to a high tolerance to provide a tight (LC6) fit with the hole. See also Fitted Pin.

US26D. Door hardware finish specification. Satin chromium plated; brushed/satin chrome. Brass or bronze base material.

US32D. Door hardware finish specification. Satin stainless steel; brushed/satin stainless.

821.04 MATERIALS. All material for fabricated items shall be new and all manufactured items shall be new. Comply with the following Sections.

Fences	705
Jacked or Bored Pipe	728
Structural Metals	807
Painting and Protective Coatings	811
Welding	809
Electrical Systems	822
Facilities	823
Metals	1013
Epoxy Resin System	1017

821.05 GENERAL REQUIREMENTS.

821.05.1 Federal, State, and Local Codes and Laws: Provide all Mechanical Work in accordance with, but not limited to, the following federal laws, and codes adopted by the State of Louisiana to govern the construction of mechanical items/systems. Use code editions that are in effect at the time the Contract is executed.

ADA-AG	Americans with Disabilities Act – Accessibility Guidelines
IBC	International Building Code
IMC	International Mechanical Code
LSPC	Louisiana State Plumbing Code
LSAC	Louisiana Sanitary Code
NFPA 54	National Fire Protection Association – Natural Fuel Gas Code (NFGC)
NFPA 58	National Fire Protection Association – Liquefied Petroleum Gas Code (LPG)
NFPA 70	National Fire Protection Association – National Electrical Code (NEC)
NFPA 72	National Fire Protection Association – National Fire Alarm and Signaling Code
NFPA 90A	National Fire Protection Association – Standard for the Installation of Air-Conditioning and Ventilating Systems
NFPA 90B	National Fire Protection Association – Standard for the Installation of Warm Air Heating and Air-Conditioning Systems
NFPA 101	National Fire Protection Association – Life Safety Code (LSC)
OSHA	Occupational Safety and Health Administration

In addition, provide all mechanical work in accordance with all local building, mechanical, electrical, and sanitary code ordinances in force in the work locality except that local inspection of utilities will not be required unless ownership of the work will be transferred to the local utility.

Providing mechanical work in accordance with Federal, State, and local codes, laws, and ordinances is a minimum requirement. Work specified in the Contract that is more stringent than that required by the Federal, State, and local codes, laws, and ordinances shall also be provided. Work that does not meet the requirements of the Federal, State, and local codes, laws, and

ordinances, and/or the Contract documents shall be corrected at no additional cost or time to the Department.

For projects with federal funding, all mechanical equipment containing steel may require conformance with applicable provisions of the federal Buy America Act 49 U.S.C. § 5323(j). This includes roller bearings, electric motors, brakes, couplings, hydraulic cylinders, hydraulic valves, etc. If there are no domestic suppliers of equipment that will meet the contract specifications, the Contractor must submit a request to the Department to apply for a waiver to use the foreign made product. The request must provide evidence that the product is not available domestically. In addition, if there is only one domestic supplier of equipment that will meet the contract specifications, and the cost of a foreign supplied product is substantially lower, the Contractor can submit a request to the Department to apply for a waiver to use the foreign made product. The request must provide evidence of the cost difference.

821.05.2 Specifications and Standards: Mechanical work shall be in accordance with, but not limited to, the following specifications and standards that govern the construction of the mechanical items/systems specified in the Contract.

AA	Aluminum Association
AABC	Associated Air Balance Council
AAMA	American Architectural Manufacturers Association
AASHTO	American Association of State Highway Transportation Officials • LRFD Bridge Design Specifications • LRFD Movable Highway Bridge Design Specifications
AIA	American Institute of Architects
AGMA	American Gear Manufacturers Association
AMCA	Air Movement and Control Association International
AISC	American Institute of Steel Construction
AISI	American Iron and Steel Institute
ANSI	American National Standards Institute
ARI	American Refrigeration Institute
ASCE	American Society of Civil Engineers
ASHRAE	American Society of Heating, Refrigerating, and Air-Conditioning Engineers

ASME	ASME International (American Society of Mechanical Engineers)
APWA	American Public Works Association
ASSE	American Society of Safety Engineers
ASTM	ASTM International (American Society for Testing and Materials International)
AWG	American Wire Gauge
AWPA	American Wood Protection Association
AWS	American Welding Society
AWWA	American Water Works Association
BHMA	Builders Hardware Manufacturers Association
CSA	CSA International
FMG	Factory Mutual Global
HI	Hydraulic Institute
IAPMO	International Association of Plumbing and Mechanical Officials
IESNA	Illuminating Engineering Society of North America
MSS	Manufacturers Standardization Society
NEBB	National Environmental Balancing Bureau
NEMA	National Electrical Manufacturers Association
NFRC	National Fenestration Rating Association
NRCA	National Roofing Contractors Association
NSF	NSF International (National Sanitation Foundation International)
SAE	SAE International (Society of Automotive Engineers International)
SDI	Steel Door Institute
SMACNA	Sheet Metal and Air Conditioning Contractors' National Association
SSPC	Society for Protective Coatings
UL	Underwriter's Laboratories

Providing mechanical work in accordance with these Specifications and Standards is a minimum requirement. Work specified in the Contract that is more stringent than that required by these Specifications and Standards shall also be provided. Work that does not meet the requirements of these Standards and Specifications and/or the Contract documents shall be corrected at no additional cost or time to the Department.

821.05.3 Workmanship: Use best industry practices at all times during the fabrication, transportation, installation, alignment, adjustment, and testing of the mechanical items/systems specified in the Contract.

821.05.4 Personnel Qualifications: Provide construction personnel who are knowledgeable and experienced in the construction/installation of mechanical items/systems shown in the Contract. Although the contract documents are of sufficient detail and quality to convey the intent of the design to an experienced contractor, they do not necessarily depict every detail or specify every incidental or ancillary item that is required for the mechanical systems to be properly fabricated, transported, installed, aligned, adjusted, tested, painted, and to function in accordance with the intent of the contract documents.

Regardless of the construction cost, all general contractors and subcontractors shall be licensed in Louisiana for the work they are performing.

821.06 MECHANICAL SYSTEM SUBMITTALS

821.06.1 General Requirements: Prepare and submit original mechanical submittals to the Bridge Engineer for review for each mechanical item as described below.

Mechanical system submittals shall comply with Sections 105.02.2, 801.05, and 820.06. They include shop drawings, cut sheets, field measurements, calculations, manuals, and any other document that the contractor is required by the Contract to produce and submit to the Bridge Engineer for review or record.

The mechanical system submittal process creates an official record of the mechanical work performed on the project, how mechanical items were installed, and required construction measurements, settings, and calculations. It also allows the Department to take exception to a mechanical item that is in conflict with the requirements of the Contract, or to correct a plan error prior to the purchase or fabrication of a mechanical item when the cost is at a minimum.

Submittals related to a given mechanical assembly, such as Detail Sheets 821.06.2(1), Assembly Sheets 821.06.2(2), Cut Sheets 821.06.3, etc., shall be submitted together in one package. The review period for these submittals will not begin until all documents have been received by the Department.

Always copy the Project Engineer whenever transmitting mechanical system submittals.

821.06.2 Mechanical Shop Drawings: Prepare and submit original mechanical shop drawings to the Bridge Engineer for review for each shop fabricated and manufactured mechanical item.

Mechanical shop drawings shall be prepared by, or under the direct supervision of, the shop that will perform the work. Mechanical shop drawings shall not be prepared by an independent entity, and given to the shop for use in fabrication. Contract plan sheets shall not be used for mechanical shop drawings.

1. Detail Sheets: Prepare and submit detail sheets for each shop fabricated mechanical item. Detail sheets shall show all views, dimensions, tolerances, fits, finishes, welds, materials, heat treatment, hardness requirements, etc. required to fabricate an individual item. For weldments, show steel plate sizes prior to machining. Include estimated weight of each fabricated Item.

2. Assembly Sheets: Prepare and submit assembly sheets for all mechanical assemblies. Assembly sheets shall show how groups of mechanical parts, both fabricated and manufactured, are to be assembled together, and where the mechanical assemblies are located on the project.

All manufactured items such as motors, speed reducers, bearings, electrical equipment, hydraulic equipment, etc., and their pertinent data shall be shown on assembly sheets. Pertinent data includes dimensions related to the assembly, weights, pressure ratings, capacities, normal operating settings, lubrication fitting types, manufacturer's recommended lubricant, frequency of lubrication, etc. Obtain dimensions of all manufactured equipment from certified drawings provided by the manufacturer prior to the production of shop drawings. Submit certified drawings with related assembly sheets.

If any manufactured item must be modified from the way it is normally delivered by the manufacturer, provide a detail of the modification on the related assembly sheet. If the modification was made by the manufacturer, provide a unique part number from the manufacturer such that when a replacement part is ordered, it will have the same modifications.

3. Submittal Procedure: Submit mechanical shop drawings electronically to the Bridge Engineer for review. The electronic file shall be a single PDF file for each mechanical assembly.

For bidding purposes, allow a review period of 14 calendar days per submittal if the submittal consists of 30 or less shop drawing sheets. For submittals containing more than 30 shop drawing sheets, allow a review period of 14 calendar days per 30 sheets submitted rounded up (40 sheets equals 28 calendar days). Review periods for separate submittals are not concurrent.

After review, rejected shop drawings will be stamped "Returned for Correction," will be initialed and dated by the reviewer, will have comments marked in red, and will be returned to the contractor electronically as a PDF file. Correct errors and mark changes by placing a cloud shaped outline around each change. Note changes in the revision block. Resubmit electronically to the Bridge Engineer for review. Any submittal with unmarked or unnoted changes will be returned without review. This process will repeat until the Department has no further comments. Mechanical shop drawings will then be stamped "Accepted in accordance with LSSRB 105.02," initialed and dated by the reviewer, and returned to the contractor electronically as a PDF file.

4. Deliverables: Provide three full scale paper reproductions and one half scale paper reproduction of all mechanical shop drawings that have been stamped "Accepted in accordance with LSSRB 105.02" to the Bridge Engineer for distribution. Paper reproductions shall be printed directly from the PDF file returned by the Department, shall show the "Accepted in accordance with LSSRB 105.02" stamp, and shall have no modifications.

821.06.3 Mechanical Cut Sheets (Manufacturer Information Sheets): Prepare and submit mechanical cut sheets to the Bridge Engineer for review for each manufactured mechanical Item.

Mechanical cut sheets shall be of good legible quality. Poor legible quality can be reason for rejection.

Stamp each sheet of each mechanical cut sheet submittal with the project name, project number, parish name, contract item number, shop drawing item number (if different), contract sheet number, and shop drawing sheet number (if different). Include the manufacturer's name if not already shown on the mechanical cut sheet. If multiple sheets are related to one item, then note each sheet with X of Y where X is the sheet number and Y is the total number of sheets.

Indicate pertinent sizes, ratings, features, or any other data (voltage, gpm, etc.) specified on the plans on the mechanical cut sheet with an arrow or other such mark. Do not use highlight markers because they do not photocopy well.

Cross out items on mechanical cut sheets that are not being submitted for review.

Include the manufactured item's warranty information if the warranty extends beyond the Contractor's guarantee period. Always include documentation for extended warranties that were required to be purchased for the Contract. Extended warranties shall be in the Department's name.

1. Submittal Procedure: Submit mechanical cut sheets electronically to the Bridge Engineer for review. The electronic file shall be a single PDF file.

For bidding purposes, allow a review period of 14 calendar days per submittal if the submittal consists of 50 or less mechanical cut sheets. For submittals containing more than 50 mechanical cut sheets, allow a review period of 14 calendar days per 50 sheets submitted rounded up (60 sheets equals 28 calendar days). Review periods for separate submittals are not concurrent.

After review, rejected mechanical cut sheets will be stamped "Returned for Correction," will be initialed and dated by the reviewer, will have comments marked in red, and will be returned to the contractor electronically as a PDF file. Correct errors and resubmit electronically to the Bridge Engineer for review. This process will repeat until the Department has no further comments. Mechanical cut sheets will then be stamped "Accepted in accordance with LSSRB 105.02," initialed and dated by the reviewer, and returned to the contractor electronically as a PDF file.

2. Deliverables: No paper reproductions of mechanical cut sheets are required. The Department will distribute "Accepted in accordance with LSSRB 105.02" mechanical cut sheets to all interested parties electronically as a PDF file.

821.06.4 Color and Material Samples: Prepare and submit color and material samples to the Bridge Engineer for review as indicated on the plans.

Color samples shall be printed hard copies by the item's manufacturer or color samples of the item itself (e.g., floor tiles of various colors). Electronic submittals of color samples are not allowed.

821.06.5 Mechanical Record Drawings: Mechanical record drawings shall become part of the final estimate package and submitted for archiving. They shall consist of the following:

1. Original, full size, mechanical contract plan sheets and change order sheets.
2. All reviewed and stamped mechanical shop drawings.
3. Any mechanical contract plan sheets (full scale) that have been marked to indicate construction changes ("As Built" sheets). These sheets shall have the Project Engineer's signature certifying that the changes are accurate.

821.06.6 Mechanical Operation and Maintenance Manual: For any project with mechanical ("M") sheets, prepare and submit a mechanical operation and maintenance manual to the Bridge Engineer for review.

Cost of preparing and submitting the Mechanical Operation and Maintenance Manual shall be included in the pay items of Sections 821, 822, and 823. The Department will retain 5 percent of the bid price of all mechanical, electrical, and facility items (821, 822, and 823 items) until the manual has been reviewed and accepted, and final paper reproductions have been received by the Department.

All sheets included in the manual must be of good legible print quality. Poor legible quality can be reason for rejection. Any sheets with color must be scanned/printed in color.

Include a title sheet showing "Louisiana Department of Transportation and Development," "Mechanical Operation and Maintenance Manual," the project name, project number, parish name, the year the project was completed, the name of the contractor, and the contractor's contact information.

Include a "Contract Plans" section that contains all original mechanical contract plan sheets and change order sheets. Scan at high quality from the full scale original and format for printing at 11 inches x 17 inches.

Include a "Shop Drawings" section that contains all mechanical shop drawing sheets. Generate from the original PDF files reviewed by the Department with the "Accepted in accordance with LSSRB 105.02" stamp, the reviewer's initials, and the date of the review. Format for printing at 11 inches x 17 inches.

Include a "Cut Sheets" section that contains all mechanical cut sheets. Generate from the original PDF files reviewed by the Department with the "Accepted in accordance with LSSRB 105.02" stamp, the reviewer's initials, and the date of the review.

Include an "As Built" section that contains all mechanical "As Built" sheets. Scan at high quality from the full scale original and format for printing at 11 inches x 17 inches.

For movable bridge projects, include a "Lubrication Plan and Equipment Settings" section that contains the "Lubrication Plan and Equipment Settings" drawings from 820.06.1. Generate from the original PDF files reviewed by the Department with the "Accepted in accordance with LSSRB 105.02" stamp, date, and reviewer's initials. Format for printing at 11 inches x 17 inches.

Include a "Warranties" section that contains all warranty information for all manufactured Items. Generate from the original PDF files reviewed by the Department with the "Accepted in accordance with LSSRB 105.02" stamp, the reviewer's initials, and the date of the review.

1. Submittal Procedure: Submit the mechanical operation and maintenance manual electronically to the Bridge Engineer for review. The

electronic file shall be a single PDF file, and shall be organized and formatted to present itself as a finished maintenance manual. For bidding purposes, allow a review period of 21 calendar days.

The entire maintenance manual will be considered one item. Only the title sheet shall be stamped "Returned for Corrections" or "Accepted in accordance with LSSRB 105.02."

If the maintenance manual is rejected after review, the title sheet will be stamped "Returned for Corrections," will be initialed and dated by the reviewer, will have comments marked in red, and will be returned electronically. Correct errors and resubmit electronically to the Bridge Engineer for review. This process will repeat until the Department has no further comments. The title sheet will then be stamped "Accepted in accordance with LSSRB 105.02," initialed and dated by the reviewer, and distributed electronically by the Department.

2. Deliverables: After the electronic submittal process has been completed, provide two paper reproductions of the mechanical operation and maintenance manual to the Bridge Engineer for review. For bidding purposes, allow a review period of 14 calendar days.

Format shall be in accordance with "Paper Reproductions" and "Letter Size Sheets" from 801.05.2.2.

Provide each manual with a white, premium, heavy duty, 3 D-ring binder with title sleeve. Binders shall be appropriately sized to hold enclosed material, and shall be extra wide to accommodate sheet protectors. Binders shall not be larger than 3 inches. Use multiple binders if necessary.

Provide each sheet with a top loading, 8 ½ inches x 11 inches, standard weight, clear, sheet protector. Fold half-scale sheets in half with printed material facing out, and insert in sheet protectors.

Provide a top loading, 8 ½ inches x 11 inches, standard weight, clear, tab index sheet protector with labeled tab to delineate sections.

If the paper reproduction of the manual is rejected after review, the title sheet of both copies will be stamped "Returned for Correction," will be initialed and dated by the reviewer, and both copies will be returned to the contractor with instructions for corrections. Correct errors and resubmit to the Bridge Engineer for review. This process will repeat until the Department has no further comments. The title sheet will then be stamped "Accepted in accordance with LSSRB 105.02," initialed and dated by the reviewer, and distributed by the Department.

821.07 GENERAL CONSTRUCTION REQUIREMENTS FOR MOVABLE BRIDGES

821.07.1 Fabrication Standards: Fabrication of parts shall conform to all standards shown in 821.05.2.

821.07.2 Burrs and Sharp Edges: Remove all burrs and break all sharp edges of fabricated parts.

821.07.3 Finished Mating Surfaces: Finished surfaces that mate with or slide on other finished surfaces shall have a 125 finish or as shown on the plans.

Immediately after fabrication, coat the surface with NO-OX-ID "A-Special" rust preventative or an approved equal to prevent corrosion.

Protect with wooden lagging or some other approved method for transportation to the field.

821.07.4 Unfinished Surfaces and Finished Non-Mating Surfaces: Paint all unfinished surfaces and finished surfaces that do not mate with other finished surfaces in accordance with Section 811.

821.07.5 Fits and Finishes: If not shown on the plans, or specified elsewhere herein, fits and finishes shall be in accordance with Table 821-1.

Table 821-1

Fits and Finishes for Common Mating Parts[1]		
Part	**Fit**	**Finish µin**
General Machinery Parts in Fixed Contact	—	125
Machinery Base in Fixed Contact with Machinery Parts	—	125
Machinery Base on Steel	—	250
Machinery Base on Masonry	—	500
Shaft Journals	RC6	8
Journal Bushings	RC6	16
Split Bushings in Base	LC1	125
Solid Bushing in Base (≤ 0.25 inch wall)	FN1	63
Solid Bushing in Base (> 0.25 inch wall)	FN2	63
Hubs on Shafts (≤ 2 inch bore)	FN2	32
Hubs on Shafts (> 2 inch bore)	FN2	63
Hubs on Main Trunnions	FN2	63
Fitted Pins in Finished Holes	LC6	63
Sliding Bearings	RC6	32
Center Pivot Disk Bearing Sliding Surfaces (Bronze and Steel Disks)	—	32
Keys and Keyways		
Top and Bottom	LC4	63
Sides (Load Transmitting)	FN2	63
Sides (Non-load Transmitting)	LC4	63
Teeth of Open Spur Gears		
Over 3 Diametral Pitch	—	32
3 - 1.75 Diametral Pitch	—	63
Under 1.75 Diametral Pitch	—	125

[1]ANSI B4.1, Fits, and ANSI B46.1, Finishes, can be found in the current edition of the Machinery's Handbook.
Surface finishes are given as the arithmetic average roughness height in µin.

821.07.6 Dimensional Tolerances: If not shown on the plans, or specified elsewhere herein, dimensional tolerances for fabricated parts shall be as follows:

Integers and Fractions: ……..	± 0.03	inch
X.XX": ……...	± 0.01	inch
X.XXX": ……	± 0.005	inch
Angles: ……...	±0.5	degrees

821.07.7 Shop Storage: Store all fabricated/manufactured mechanical parts/equipment out of the weather while at the shop.

821.07.8 Stainless Steel Bolts: Unless otherwise specified on the plans, all standard bolts used with mechanical parts/equipment shall be stainless steel in accordance with the following.

1. Material: ASTM F593, Type 304 or 316, alloy groups 1 or 2, Condition CW, minimum tensile strength of 80 ksi, and minimum yield strength of 40 ksi.
2. Head: Hex head as specified in ANSI B18.2.1.
3. Threads: UNC as specified in ANSI/ASME B1.1, Class 2A tolerances.
4. Nut: ASTM F594 with a minimum proof stress equal to or greater than the bolt, and the same alloy group as the bolt. Hex head as specified in ANSI B18.2.2. One required per bolt.
5. Flat Washers: Type 304 or 316 stainless steel with a minimum tensile strength of 80 ksi and minimum yield strength of 40 ksi. For standard size holes, use American Standard Type A, narrow series. For oversized holes, use American Standard Type A, wide series. Two required per bolt, one under the head and one under the nut.
6. Beveled Washers: Fabricate from the same material as the flat washers. Bolt heads and nuts shall bear flat on the materials being fastened. Beveled washers shall be used where bearing faces on either the head or nut of the bolt have a slope of more than 1:20.
7. Bolt Holes: For shank diameters less than 1/2 inch, hole diameters shall be 1/32 inch larger than the shank diameter. For shank diameters greater than or equal to 1/2 inch, hole diameters shall be 1/16 inch larger than the shank diameter. Where oversized holes are permitted, double these allowances.

Bolt holes shall be drilled, or sub-drilled and reamed in either the shop or the field and shall be cylindrical and perpendicular to the materials being fastened. Diameters shall be accurate to within 0.01 inch. Where practical,

direct drills and reamers by mechanical means. If materials being fastened do not mate flush, draw firmly together prior to drilling/reaming. Poor matching holes will be cause for rejection. After drilling/reaming, grind bolt holes free of sharp edges or burrs. Burned holes are not allowed.

8. Handling: Carefully pack bolts and their matching accessories (nuts and washers) together in a water tight, resealable container by the shop in a manner that prevents damage during shipping. Clearly and permanently label the container to identify the material, type, size, and length of the enclosed bolts, nuts, and washers. In the field, store the container out of the weather, and do not open until ready to install the bolts. Only remove from storage the number of fasteners that will be installed during a work shift.

9. Installation: Locate one flat washer under the head, and one flat washer under the nut. Torque the nut in accordance with Table 821-2. Threads shall be clean, but not lubricated. Bolts so torqued may be reused as long as there is no visible elongation or deformation of the bolt or threads. Use only properly fitting wrenches or sockets to tighten nuts.

Table 821-2

Torque Table for Stainless Steel Bolts **ASTM F593 - 80 ksi Tensile, 40 ksi Yield** Threads should be clean, but not lubricated			
Bolt Diameter (inch)	**Torque (ft-lbs)**	**Bolt Diameter (inch)**	**Torque (ft-lbs)**
1/4	3	3/4	86
5/16	5	7/8	145
3/8	10	1	215
7/16	16	1 1/8	300
1/2	24	1 1/4	430
9/16	35	1 3/8	560
5/8	48	1 1/2	750

821.07.9 High Strength Bolts: When specified for use on mechanical equipment, high strength bolts shall meet all requirements of Sections 807 and 1013.

821.07.10 High Strength Anchor Bolts: When specified for use on mechanical equipment, high strength anchor bolts shall meet all requirements of Sections 807 and 1013.

821.07.11 High Strength Stainless Steel Anchor Bolts: When specified for use on mechanical equipment, cast-in-place and drilled-in-place high strength stainless steel anchor bolts shall comply with the following.

1. Material: Bolts less than or equal to 1-1/2 inches diameter, use ASTM F593, alloy group 7, condition AH, minimum tensile strength 135 ksi, minimum yield strength 105 ksi. Bolts larger than 1-1/2 inches diameter, use ASTM A564, Type 630, Condition H1150, 135 ksi minimum tensile strength, 105 ksi minimum yield strength.

2. Head: Anchor bolts less than or equal to 1-1/2 inches diameter shall have hex heads as specified in ANSI B18.2.1. Anchor bolts greater than 1-1/2 inches diameter will not have a head. They shall be fabricated from bar stock and threaded on each end as shown on the plans.

3. Threads: UNC as specified in ANSI/ASME B1.1, class 2A tolerances.

4. Nuts: Bolts less than or equal to 1-1/2 inches diameter, use ASTM F594 nut with a minimum proof stress equal to or greater than the bolt, and the same alloy group as the bolt. Hex head as specified in ANSI B18.2.2. One required per bolt. Bolts greater than 1-1/2 inches diameter, fabricate from same material as the anchor bolt. Use heavy hex dimensions as specified in ANSI B18.2.2. Threads shall have Class 2B tolerances. Two nuts required with each anchor bolt.

5. Flat Washers: Fabricate from same material as the anchor bolt. Use dimensions for American Standard Type A, narrow series washers. One required for each anchor bolt.

6. Beveled Washers: Fabricate from same material as the anchor bolt. Nuts shall bear flat on the materials being fastened. Beveled washers shall be used where bearing faces under the nut have a slope of more than 1:20.

7. Bolt Holes: Hole diameters shall be 1/16 inch larger than the shank diameter.

8. Packaging/Shipping/Storage: Provide resealable water tight containers for shipping and storage. Pack anchor bolts in containers in a manner that prevents damage during shipping. Clearly and permanently label container to identify the contents and reference the contents with the plans. Store the container out of the weather at the project site.

9. Installation: Locate anchor bolts for mechanical equipment with an anchor bolt template in accordance with 821.07.10. Torque nut in accordance with Table 821-3. Threads shall be cleaned, but not lubricated. Anchor bolts so torqued may be reused as long as there is no visible elongation or deformation of the bolt or threads. Use only properly fitting wrenches or sockets to tighten nuts.

821.07.12 High Strength Stainless Steel Turned Bolts and Fitted Pins: For applications less than or equal to 1-1/2 inches diameter, fabricate turned bolts from bolt blanks in accordance with the plans and the following specifications. For applications greater than 1-1/2 inches diameter, fabricate fitted pins from bar stock and thread at both ends in accordance with the plans and the following specifications.

1. Material: For diameters less than or equal to 1-1/2 inches, fabricate turned bolts from ASTM F593 bolt blanks, alloy group 7, condition AH, min. tensile strength 135 ksi, min. yield strength 105 ksi. For diameters greater than 1 1/2", fabricate fitted pins from ASTM A564, Type 630, Condition H1150, 135 ksi min. tensile strength, 105 ksi min. yield strength.

2. Shank Dimensions/Tolerances: Nominal shank diameters shall be as shown on the plans. Shanks shall be straight to within 0.005 inch per inch of length, shall have a surface finish of ANSI 63 µin or better, and shall have an LC6 fit with the bolt/pin hole based on the nominal diameter.

3. Head: For diameters less than or equal to 1-1/2 inches, turned bolts shall have hex heads as specified in ANSI B18.2.1.

4. Threads: UNC as specified in ANSI/ASME B1.1, Class 2A tolerances. Threads shall not extend into the shear plane of the bolt/pin.

5. Nuts: For diameters less than or equal to 1-1/2 inches, use ASTM F594 nut with a minimum proof stress equal to or greater than the bolt, and the same alloy group as the bolt. Hex head as specified in ANSI B18.2.2. One required per bolt. For diameters greater than 1-1/2 inches, fabricate nuts from same material as the pin. Use heavy hex dimensions as specified in ANSI B18.2.2. Threads shall have Class 2B tolerances. Two nuts required with each fitted pin.

6. Flat Washers: Fabricate from same material as the anchor bolt/fitted pin. Use dimensions for American Standard Type A, narrow series washers. Two required for each anchor bolt/fitted pin.

7. Beveled Washers: Fabricate from same material as the anchor bolt/fitted pin. Nuts shall bear flat on the materials being fastened. Beveled washers shall be used where bearing faces under the nut have a slope of more than 1:20.

8. Holes: Sub-drill and ream holes in either the shop or the field as indicated on the plans. In either case, direct drills and reamers by mechanical means. Holes shall be cylindrical and perpendicular to the materials being fastened, and shall be reamed to a tolerance that will provide an LC6 fit with the turned bolt/fitted pin diameter. Holes shall have an ANSI 63 µin finish or better, and shall be ground free of sharp edges or burrs. If materials being

fastened do not mate flush, firmly draw together prior to drilling/reaming. Do not use burned or slotted holes for turned bolts/fitted pins.

9. Packaging/Shipping/Storage: Provide resealable water tight containers for shipping and storage. Pack anchor bolts/fitted pins in containers in a manner that prevents damage during shipping. Clearly and permanently label container to identify the contents and reference the contents with the plans. Store the container out of the weather at the project site, and remove only the number of turned bolts/fitted pins that will be installed in a work shift.

10. Installation: Lightweight oil may be used to facilitate assembly; however, oil shall be cleaned from threads prior to tightening nuts. Locate one flat washer under each nut. Torque the nut in accordance with Table 821-3. Turned bolts/fitted pins so torqued may be reused as long as there is no visible elongation or deformation of the pin or threads. Use only properly fitting wrenches or sockets to tighten nuts.

Table 821-3

Torque Table for High Strength Stainless Steel Bolts and Pins ASTM F593 & A564 - 135 ksi Tensile, 105 ksi Yield Threads should be clean, but not lubricated			
Bolt Diameter (inch)	**Torque (ft-lbs)**	**Bolt Diameter (inch)**	**Torque (ft-lbs)**
1/2	65	1 3/4	3,100
9/16	90	2	4,650
5/8	130	2 1/4	6,900
3/4	230	2 1/2	9,400
7/8	370	2 3/4	12,900
1	550	3	17,200
1 1/8	790	3 1/4	22,300
1 1/4	1,125	3 1/2	28,300
1 3/8	1,450	3 3/4	35,300
1 1/2	1,950	4	43,400

821.07.13 Shim Packs: Fabricate shim packs for adjustment of mechanical equipment as shown on the plans. Fabricated shim packs shall neatly match the shape of the equipment to be shimmed, have all holes/slots

pre-drilled, and have the thickness marked on each shim with an indelible marker. Submit shop drawings for fabricated shim packs to the Bridge Engineer for review. Shop drawings shall show dimensions, material and number of shims supplied with each shim pack.

The shop may fabricate a single stainless steel shim to precise dimensions for any machinery assembled in the shop.

1. "A" Shim Packs: "A" shim packs contain very fine shims and are capable of positioning mechanical equipment with a high degree of accuracy. Use where indicated on the plans for machinery that require precise alignment to function correctly (electric motors, pumps, pinion bearings, etc.).

Number, thickness, and material of shims in "A" shim packs shall be in accordance with Table 821-4.

Table 821-4

"A" Shim Packs - Number, Thickness, and Material								
Nominal Shim Pack Size (inches)	Stainless Steel, ASTM A666, Type 302/304/316							
	Shim Thickness (inches)							
	1/4	1/8	1/16	1/32	.016	.008	.004	.002
	Number of Shims per Shim Pack							
3/8	2	1	1	1	1	1	1	1
5/16	1	2	1	1	1	1	1	1
1/4	1	1	1	1	1	1	1	1
3/16	0	2	1	1	1	1	1	1
1/8	0	1	1	1	1	1	1	1

Where appropriate (under electric motor feet, pump feet, etc.), commercially available, stainless steel, square, slotted, shim packs with an accuracy of 0.001inch may be used as "A" shim packs. Submit cut sheets for commercial shim packs to the Bridge Engineer for review.

2. "B" Shim Packs: "B" shim packs are accurate to ± 1/16 inch. Use where indicated on the plans for machinery that does not require highly accurate positioning to operate properly.

Number, thickness, and material of shims in "B" shim packs shall be in accordance with Table 821-5.

Table 821-5

"B" Shim Packs - Number, Thickness, and Material								
Nominal Shim Pack Size (inches)	ASTM A709, GR. 36/50					Stainless Steel ASTM A666 302/304/316*		
	Shim Thickness (inches)							
	1	3/4	5/8	1/2	3/8	1/4*	1/8*	1/16 *
	Number of Shims per Shim Pack							
1	1	0	0	1	0	1	1	1
3/4	0	1	0	0	1	1	1	1
5/8	0	0	1	0	1	1	1	1
1/2	0	0	0	1	0	1	1	1
3/8	0	0	0	0	1	1	1	1
1/4	0	0	0	0	0	1	1	1

3. Packaging: Carefully package/bundle individual shim packs not installed in the shop in a manner that will prevent damage or the loss of shims during shipping/handling. Permanently label package/bundle to reference the shim pack with the plans. Shim packs shall then be packed together in a watertight, resealable container by the shop in a manner that prevents damage during shipping. Clearly and permanently label the container to identify the enclosed shim packs and reference the shim packs with the plans. In the field, store the container out of the weather, and do not open until ready to install the shim packs. Only remove from storage the shim packs that will be installed during a work shift.

821.07.14 Keys and Keyways: Provide keys and keyways as follows unless otherwise shown on the plans.

1. Material: For carbon or alloy steel shafts, make keys from forged steel that meets the requirements of ASTM A668/A668M, Class D minimum. Keys less than 1/2 inch square may be cold finished carbon steel that meets the requirements of ASTM A675/A675M, Grade 80. If a gearbox or other manufactured component has been specified to have a stainless steel shaft, the

key shall also be stainless steel with similar mechanical and corrosion resistant properties as the shaft.

2. Sizing and Fits: Size keys used to transmit torque generated by a prime mover to develop the full strength of the shaft. If two keys are required, locate keys 120 degrees apart, with each key capable of carrying 60 percent of the full torsional strength of the shaft. Sides of these keys shall have an FN2 fit with the keyway. Tops and bottoms of these keys shall have an LC4 fit with the keyway.

Keys not transmitting torque (such as for rotary limit switch shafts) can be sized appropriately for the load. All four sides of these keys shall have an LC4 fit with the keyway.

For manufactured items such as electric motors, gearboxes, etc., key size, length, and strength shall be determined by the manufacturer, but must meet the above requirements.

Key length shall be sufficient to fill entire keyway.

3. Fabrication: Fabricate keys and keyways to have widths and heights in accordance with ANSI Standards. Machine keys and keyways to have parallel faces with square or rectangular cross-sections. Plane surfaces to have an ANSI 63 µin finish. If tapered keys are specified, machine to bear on all four surfaces.

4 Keyways: Machine cut all keyways and provide a fillet in the bottom of each corner in accordance with ANSI B17.1. For keyways located in shafts, provide closed ends milled to a semi-circle equal to the width of the key where possible. Keyways shall not extend into any bearing or shaft shoulder fillet. In hubs of wheels with spokes, locate keyway in the center of the spoke. Provide safety set screws or other effective means to hold any key that is not set into closed end keyways.

821.07.15 Weldments: Provide weldments as follows unless otherwise shown on the plans.

1. Material: Steel for weldments shall comply with ASTM A572/A572M, Grade 50, unless otherwise specified on the plans. In all cases, steel for weldments shall be weldable grades as designated by applicable ASTM standards.

2. Fabrication: All welds shall be in accordance with Section 809, and shall be complete joint penetration unless otherwise shown on the plans. Shop drawings shall show weld type and sizes and all plate thicknesses prior to machining.

3. Tolerances: Position unfinished plates to within 0.5 degree of the specified angle on the plans. Provide flat finished surfaces to within 0.05

degree of the reference datum and a minimum surface flatness of 0.010 inch. Flat finished surfaces that mate with a manufactured part shall have a minimum surface flatness of 0.010 inch or the recommended surface flatness of the part manufacturer, whichever is more stringent. Where finish marks are shown on the plans, machine the entire surface of the weldment flat to the final dimension shown on the plans.

4. Non-Destructive Weld Testing: Weldments that support dead load, live load, or span drive forces including the counterweight sheaves, sheave pedestals, center pivot bearing housings, balance wheels, end and center wedges, span drive hydraulic cylinder mounting brackets, etc., shall be 100 percent tested by non-destructive methods in accordance with Section 809.

5. Stress Relief: Provide a stress relief heat treatment prior to final machining. Submit to the Bridge Engineer for review a schedule listing the heat treatment to be performed on each weldment. Schedule shall include a description of the part, the rate of heating, soaking temperature, time at soaking temperature (min. one hour), rate of cooling, and the temperature at which the part will be removed from the chamber.

821.07.16 Anchor Bolt Templates: Provide templates for all machinery anchor bolts even if not shown on the plans. Templates shall hold anchor bolts vertical and provide proper spacing. Submit shop drawings for all anchor bolt templates to the Bridge Engineer for review.

821.07.17 Open Gear Sets: Provide open gear sets that are spur gears with 20 degree involute, full depth teeth cut and mounted to meet requirements of the current AGMA standards. Gear quality and backlash shall be as specified on the plans. If the gear quality or backlash is not shown on the plans, request clarification from the Bridge Engineer. Show the AGMA quality number and backlash that will be cut into each gear on the shop drawings.

1. Fabrication: Fabricate open gears from solid rims or blanks, and finish the sides and peripheries. The working surfaces of all gear teeth shall be true to the proper outline, accurately spaced on the pitch circle, free from planing or mill-cutter ridges, and the surface finish smoothness shall be equal to or exceed AASHTO finish guidelines. Remove cutter burrs from edges of teeth, and round the top edges of teeth to 1/16 inch radius. For all open gears that will transmit torque from a prime mover, scribe the pitch circle on both sides of the gear not less than 1/32 inch deep with a “V” pointed tool.

Fabricate ring/bull/rack gears in segments as shown on the plans. Fit ends accurately maintaining tooth pitch across the splice. Finish the contact

surfaces between the sides of the gear segments and the gear mounting surfaces.

2. Field Installation: For rack and pinion open gear installations for movable bridges, see Section 820.

Align the pinion gear so that the backlash is near the lower end of the range shown on the plans. For acceptable gear contact, 80 percent of the teeth shall have 80 percent contact along the face of the teeth, and no tooth shall have less than 50 percent contact. If tooth contact does not meet this requirement, adjust pinion alignment and retest. Repeat until gear alignment meets both the backlash and tooth contact requirements. Once gear alignment has been verified, install bolts in the pinion bearings as shown on the plans.

821.07.18 Roller Bearings: Provide roller bearings from an established manufacturer who has produced bearings of comparable size, material, and type as that specified on the plans, and that have been in successful service for at least 10 years.

1. Shop Installation: Preferably, all roller bearings shall be installed on shafts in the shop. Large roller bearings, bore sizes 10 inches or greater, shall be installed under the direction of a representative of the bearing manufacturer. Shop shall coordinate with the bearing representative to insure that a proper environment for installing the bearings will be provided by the Shop, and all cleaning supplies, tools, and measuring devices needed to correctly install the bearings will be on hand the day of installation.

2. Transportation to the Field: Bearings that have been installed on shafts must be properly prepared for transportation to the project site in accordance with the recommendations of the bearing manufacturer. For large bearings, this may include the fabrication of a structure to support/protect the bearing during transport.

821.07.19 Electric Squirrel Cage Induction Motors: Provide electric squirrel cage induction motors that meet the following requirements, if commercially available:

1. Rated for “chemical” or “severe duty”
2. IEEE-841 standard for severe duty applications
3. NEMA MG1 standard
4. NEMA design B standard
5. NEMA premium efficiency standard
6. NEMA dimensional standards
7. Rated for continuous duty
8. 1.15 service factor

9. Totally enclosed non-ventilated (TENV) if commercially available, otherwise totally enclosed fan cooled (TEFC)
10. Foot mounted heavy duty cast iron frame or stainless steel frame
11. Oversized cast iron rotatable junction box
12. Copper windings
13. Class F insulation
14. Windings coated for tropical environments
15. Automatically resetting thermal overloads
16. Severe duty epoxy paint system both inside and out
17. Grease-able ball bearings
18. Premium shaft seals
19. All joints gasketed and sealed
20. Stainless steel hardware or at least corrosion resistant hardware
21. Stainless steel nameplate

Horsepower, frame, rpm, voltage, phase, and hertz shall be as shown on the plans.

821.07.20 Main Span Drive Speed Reducers: Design the main span drive speed reducers in accordance with current AGMA standards, and size for the horsepower input shown on the plans with a service factor of 2.0 for strength and 1.25 for durability.

1. Certified Drawings: Provide manufacturer's certified drawings that show the following as a minimum:

a. External drawings showing all mounting dimensions including shaft sizes and keyways.

b. Internal drawings showing all internal components.

c. Complete part list (with part numbers) of all components with descriptions that show materials, gear teeth information, bearing information, seal information, etc.

d. Horsepower rating, thermal rating, gear ratios, dry and wet weight, and lubricant recommendations.

2. Housing: Fabricate housing from steel with adequate inspection openings to permit easy inspection of all gears after installation. Inspection openings shall have a raised lip or "picture frame" to prevent rain water from pooling at the seal.

Attach inspection covers with stainless steel hardware that meets or exceeds the material requirements of stainless steel bolts in 821.07.8.

Provide a sight glass to measure the lubricant level.

Provide a thermometer to show oil temperature.

Provide a port to fill oil.

Provide a hygroscopic air breather with an adequate filter to prevent particulate matter from entering the housing.

Provide an oil drain port with a bronze or stainless steel drain valve. Valve shall have a bronze or stainless steel plug to prevent loss of the lubricant due to accidental opening or vandalism.

Provide a permanent, stainless steel or aluminum name plate stating the name of the speed reducer manufacturer, horsepower rating, service factors, input rpm, output rpm, exact gear ratio, thermal rating, AGMA symbol, and a name (such as "Gearbox 1") to differentiate the speed reducers.

If the speed reducer is to be installed outdoors, provide inspection cover seals, sight glass, thermometer, air breather, and paint that are appropriate for outdoor use.

3. Gears: Speed reducer shall utilize spur, helical, herringbone, and/or bevel gears fabricated and mounted to meet requirements of the current AGMA standards. Gears shall be through-hardened, cut from solid rims or blanks, and have the AGMA gear quality of Class 9 or greater. Show the AGMA gear quality on the shop drawings.

The working surfaces of the teeth shall be true to the proper outline, accurately spaced on the pitch circle, and free from planing or mill cutter ridges. Remove cutter burrs from all edges of teeth, and round the top edges of the teeth to a 1/32-inch radius.

4. Input Shafts: Provide two non-differential input shafts parallel with two output shafts as shown on the plans. Design input shafts for two times the rated horsepower of the speed reducer.

Provide diameter and length of input shafts to accommodate brake wheels, couplings, and key seating as shown on the plans.

5. Output Shafts: Provide two output shafts parallel to the input shafts as shown on the plans. Output shafts shall be capable of differential output by the means of a manual clutch mechanism.

Provide diameter and length of output shafts to accommodate couplings and key seating as shown on the plans.

6. Clutch Mechanism: Provide a manual clutch mechanism capable of locking and unlocking the output shafts while the speed reducer is loaded, unloaded, rotating, or stationary. It shall be engaged and disengaged by pushing and pulling an external rod as shown on the plans.

7. Double Shaft Seals: Provide FKM double shaft seals on the input and output shafts with provision to grease between the seals.

8. Bearings: Provide anti-friction type roller bearings with a B-10 life of 100,000 hours while transmitting the full rated motor horsepower.

9. Lubrication: Speed reducer shall be designed to provide automatic and continuous lubrication of all gear teeth and bearings. Provide a synthetic lubricant as recommended by the speed reducer manufacturer. Use the same lubricant for testing that will be used for operation. After testing, lubricant shall be removed and the gearbox shall be cleaned before shipment to the shop. New lubricant shall be used at the project site.

10. Shop Testing: Test both span drive speed reducers by the following method.

a. General: Speed reducers shall be tested by the manufacturer in the presence of a representative of the Department before shipment to the shop for incorporation in the span drive machinery shop assembly. The speed reducer manufacturer shall provide a 14 calendar days notice to the Bridge Engineer prior to the date of the testing.

Prior to adding lubricant and testing, the speed reducer manufacturer shall blue the gears and run the speed reducers to demonstrate gear alignment. Include photographs of the gear contact patterns in the final testing report.

All parts of testing shall be performed consecutively. The speed reducer manufacturer shall not start testing unless all the following testing parts can be completed.

b. Testing Part 1 – No Load Test (Both Speed Reducers): Engage clutch (output shafts locked together), turn the input shaft at 900 rpm with no load on the output shafts. Run the speed reducer for 30 minutes. Verify and record output rpm. At 10-minute intervals, measure and record the oil temperature and the external temperatures at each shaft seal and bearing cover. After 30 minutes, stop the gearbox and immediately open the inspection cover. Measure and record the temperature of all bearings.

Repeat test for opposite direction. If no problems are found, proceed immediately to Part 2.

c. Testing Part 2 – No Load Test (Both Speed Reducers): Disengage clutch (output shafts not locked together), turn the input shaft at 450 rpm and hold one output shaft fixed. Run speed reducer for 30 minutes. Verify and record output rpm. At 10-minute intervals, measure and record the oil temperature and the external temperatures at each shaft seal and bearing cover. After 30 minutes, stop the speed reducer and immediately open the inspection cover. Measure and record the temperature of all bearings.

Repeat test holding the other output shaft fixed, and turning the input shaft in the opposite direction. If no problems are found, proceed immediately to Part 3.

d. Testing Part 3 – Load Test (Both Speed Reducers): Engage clutch (output shafts locked together), turn the input shaft at 870 rpm, slowly apply load to one output shaft until full load torque is reached. Run speed reducer for 30 minutes.

Measure and record the output rpm of both output shafts to verify that there is no clutch slippage. At 10-minute intervals, measure and record the oil temperature and the external temperatures at each shaft seal and bearing cover. After 30 minutes, stop the speed reducer and immediately open the inspection cover. Measure and record the temperature of all bearings.

Repeat test turning the input shaft in the opposite direction. If no problems are found, proceed immediately to Part 4.

e. Testing Part 4 – Load Test (Both Speed Reducers): Disengage clutch (output shafts not locked together), hold one output shaft, turn the input shaft at 435 rpm, slowly apply load to the other output shaft until full load torque is reached. Run speed reducer for 30 minutes.

At 10-minute intervals, measure and record the oil temperature and the external temperatures at each shaft seal and bearing cover. After 30 minutes, stop the speed reducer and immediately open the inspection cover. Measure and record the temperature of all bearings.

Repeat test by holding the other output shaft, and turning the input shaft in the opposite direction.

f. Testing Report: After testing is complete, submit a report with all measurements taken during testing to the Bridge Engineer for review.

11. Shipment: After testing is complete, transport the speed reducers to the shop that is assembling the span drive machinery.

821.07.21 Motor and Machinery Brakes: Provide thruster operated shoe brakes as follows unless otherwise specified on the plans.

1. Features: Low force hand release; hydraulic, adjustable time delay on setting (0-8 seconds); stainless steel enclosure with means to access all adjustment points.

2. Shop Testing: Adjust the time delays on the "Motor" brakes to set in approximately one second. Adjust the time delays on the "Machinery" brakes to set in approximately four seconds. Verify through experimentation and testing that the torque scale on the brakes is correct, and that the brakes are set at the torque setting shown on the plans. The shop will demonstrate the

braking torque settings and the time delay settings at the shop to a representative of the Bridge Engineer prior to shipment to the field.

3. Field Testing: During the field testing and setup of the movable span, provide personnel, tools, and measurement equipment to adjust the brakes until the span performs to the satisfaction of the Bridge Engineer's inspector.

821.07.22 Hydraulic Reservoir: The hydraulic reservoir shall serve as the machinery platform for the hydraulic components that comprise the Hydraulic Power Unit (HPU). Design the reservoir accordingly. Utilize welded stainless steel plate construction conforming to ASTM A276, type 316 with 3/16 inch minimum thickness. Total volume shall be as shown on the plans. Features shall include removable cleanout covers, baffles, sight gauge and thermometer, electronic low level indicator, fluid sampling ports, and drain ports with bronze plugs.

821.07.23 Hydraulic Pumps: Provide hydraulic pumps as follows unless otherwise specified on the plans. Hydraulic pumps shall be fixed displacement, pressure and flow compensated, rated for continuous duty at 3,000 psi minimum, and shall have SAE four bolt flange ports with FKM O-ring seals.

821.07.24 Main Span Hydraulic Cylinders:

1. Fabrication: Bore size, rod size, stroke length, and other dimensional requirements shall be as shown on the plans. The intent of the design is for the cylinders to be rated for a working pressure of 3,000 psi, and rated against buckling in the fully extended position at a pressure of 1,700 psi with a safety factor of 3. The hydraulic cylinder manufacturer shall adjust cylinder dimensions if needed to meet this intent and submit the changes to the Bridge Engineer for review.

2. Cylinder Rods: Rods shall be high strength carbon steel, case hardened, and hard chrome plated. They shall have spanner wrench flats or other approved means to prevent the rod from rotating while assembling or removing the rod end.

3. Rod Seals and Bearings: Provide FKM seals. Sealing system for the cylinder rod shall provide for dynamic low pressure and dynamic high pressure sealing, and a scraper to prevent ingression of contaminants. Seals shall be rated for continuous use at 3,000 psi and periodic spikes of 5,000 psi. Provide wear-rings or bushings that will insure proper guidance of the rod and provide ample bearing area to prevent side loading.

4. Ports: Main ports shall be SAE code 62 four bolt flange ports with FKM O-ring seals rated for 6,000 psi.

5. Cushions: Span drive cylinders shall be cushioned at both ends. Cushions shall be adequate to slow the span from full speed to creep speed (5 percent of full flow) prior to the cylinders reaching the end of their stroke without exceeding a 5,000 psi pressure intensification in the cushion. Use a minimum 4-inch long cushion spear with dual adjustable needle valves in series to provide progressive cushioning action. Needle valves shall be tamper proof. Cushions shall be designed to provide similar force reactions from the cylinders during deceleration of the movable span. Show details of the cushions and a description of the cushion's performance on the hydraulic cylinder submittal. Cushions may be bolted to each end of the cylinder.

6. Calculations: Prepare and submit calculations for the cylinders to the Bridge Engineer for review. Calculations shall include the cylinder buckling strength, tube yield strength, rod eye tear out yield, blind end eye tear out yield, rod pull out strength, cushion calculations, and any other strength calculation deemed necessary by the Bridge Engineer.

7. Shop Testing: The Shop shall prepare and submit to the Bridge Engineer for review a test plan for the span hydraulic cylinders. Submittal shall show a schematic of the test setup, and describe the tests to be performed. The Shop must provide a power unit that can provide the pressures and flows required to perform all tests, and it shall provide all equipment needed to measure and record the test data. All testing shall be performed using the exact type of hydraulic oil that will be used on the project. Oil used in the testing shall not be reused.

At a minimum, the Shop shall perform the following tests on all span hydraulic cylinders: A pressure test, a leak test of the piston seals, a dynamic test of the cushions where the cushions must decelerate the cylinder to creep speed while the power unit is driving the cylinder without exceeding 5,000 psi in the cushion.

The Shop must demonstrate the ability to adjust the amount of cushioning with the needle valves.

8. Field Testing: During the field testing and setup of the movable span, provide personnel, tools, and measurement equipment to perform the following procedure.

Bypass the span nearly closed and closed limit switches. Open the span a few feet and close the span at a slow speed allowing only the cylinder cushions to stop the span. Measure and record the pressures in the cushions. If the span is stopping too abruptly, or if the cylinders are not equally sharing the deceleration loads, adjust the cushion needle valves until the issues are corrected. Progressively increase the closing distance and the closing speed

until the span is closed at full speed and is decelerated using only the cylinder cushions, and the cylinders are equally sharing the deceleration loads.

821.07.25 Rigid, High Pressure, Hydraulic Lines External to the HPU:

1. Material: Provide seamless, low carbon, 3,000 psi, stainless steel pipe that conforms to ASTM A312/A312M, type 304/316. Pipe shall have four bolt, SAE code 61, 3,000 psi, stainless steel flanges with FKM O-ring seals.

2. Fabrication: Shop fabricate pipe sections as shown on the plans. Where possible, turns and offsets shall be made by bending the pipe. No flattening or crimping in the bends will be allowed. Weld all pipe fittings (elbows, tees, flanges, etc.). No threaded or metal compression fittings are allowed. All welds in flanges and fittings shall be full penetration welds. Air bleeds/gauge cocks shall be provided in the piping as shown on the plans and at high points of the hydraulic system.

3. Preparation for Shipment/Shop Storage: After fabrication is complete, remove all loose scale and slag from the interior and exterior of the welds. Thoroughly clean and flush pipe sections of all contaminants. Wooden plugs shall be installed in all openings, and the pipe sections shall then be covered with heavy plastic sheeting held in place by steel bands. While at the shop, store pipe sections indoors and protect from the weather.

821.07.26 Rigid, High Pressure, Hydraulic Lines Internal to the HPU:

1. Material: Provide either stainless steel pipe as specified above, or seamless, annealed, low carbon, 3,000 psi, stainless steel tubing that conforms to ASTM A269, types 304, 304L, 316, or 316L. Tubing shall have braze type, 3,000 psi, O-ring seal flanges. No threaded or metal compression fittings are allowed.

2. Fabrication: Shop fabricate all pipe/tubing sections. Where possible, make turns and offsets by bending. No flattening or crimping in the bends will be allowed. Weld all pipe fittings (elbows, tees, etc.). No threaded or metal compression pipe/tubing fittings or flanges are allowed. After welding/brazing of a pipe/tubing section is complete, remove all loose scale and slag from the interior and exterior of the welds/brazing. Thoroughly clean and flush free all contaminants from the rigid pipe/tubing sections before they are incorporated into the HPU.

821.07.27 Rigid, Low Pressure (Tank) Hydraulic Lines, Internal and External to the HPU:

1. Material: Provide rigid, standard duty copper or stainless steel pipe; or rigid, standard duty copper or stainless steel tubing intended for use in

industrial hydraulic applications. Threaded and metal compression fittings are allowed.

2. Fabrication: Shop fabricate pipe/tubing sections. After fabrication /assembly is complete, thoroughly clean and flush free piping/tubing sections of all contaminants before incorporating into the hydraulic system.

821.07.28 Flexible Hydraulic Hoses:

1. Material: Provide flexible hydraulic hoses as specified on the plans or approved equal. Hoses shall be intended for use with high pressure industrial hydraulic systems, and rated for 5,000 psi minimum.

2. Fabrication: Flexible hydraulic hoses shall have re-useable, stainless steel, 5,000 psi, four bolt connection fittings with FKM O-ring seals. Fittings shall conform to SAE j518, code 62 specifications. Measure dimensions in the field to verify lengths before fabrication. Hose lengths shall be the minimum length needed to make the connection without having the hose exceed the minimum bend radius at any point during the normal operation of the span. Excessive looping that does not serve an operational function is not allowed.

821.07.29 Hydraulic Seals: All seals used in hydraulic systems shall be FKM seals.

821.07.30 Cleaning, Assembly, and Flushing of Hydraulic Systems: Follow all practices specified in ASTM D4174 for cleaning, flushing, and purification of hydraulic systems that apply to the fabrication, cleaning, handling, storage, assembly, contamination control, installation, flushing, testing, and operation of hydraulic systems to produce optimum system reliability. Allow only personnel experienced with contamination prevention to work on hydraulic systems.

1. Fabricated Parts: Clean and flush fabricated parts such as rigid pipe, flexible hoses, reservoir, manifold, etc. in accordance with ASTM D4174. After cleaning and flushing has been completed, wet internal surfaces that are prone to corrosion with a VSI oil that is compatible with the hydraulic oil that will be used for testing and operation of the hydraulic system. Cover all openings to prevent recontamination. Ends of rigid pipe and flexible hoses shall be sealed with cover plates, wooden plugs, or other approved method to prevent recontamination.

2. Manufactured Parts: Do not open manufactured parts until the fabricator is ready to install them as part of the hydraulic system. Prior to installation; inspect, clean, and flush manufactured parts such as, pumps, directional control valves, stop valves, relief valves, check valves, etc. in accordance with ASTM D4174.

3. Adding Hydraulic Fluid to Reservoir: Filter hydraulic fluid in accordance with ASTM D4174 any time hydraulic fluid is added to the reservoir. This includes filling the reservoir for shop testing and field testing/operation, or the addition of make-up fluid.

4. Flushing of Hydraulic System: Prior to Shop testing or field testing/operation, flush the hydraulic system in accordance with ASTM D4174.

821.07.31 Field Setup, Testing, and Break-in of Hydraulic Systems:

1. Field Setup and Testing: After field assembly and flushing has been completed, perform a static pressure test of the entire hydraulic system by pressurizing the system to 3,000 psi and holding for 15 minutes. Inspect for leaks. If leaks are found, fix the leaks and retest.

2. Break-in of Hydraulic System: After field setup and testing of the hydraulic system has been completed, operate the span at least 10 times consecutively. Remove and properly dispose of the existing hydraulic fluid and replace with new hydraulic fluid. Replace all hydraulic system filters.

821.07.32 Center Pivot Bearing for Swing Span Bridges: Center pivot bearings shall be as follows unless otherwise shown on the plans.

1. Housing: Housing shall be a steel weldment, ASTM A709/A709M, Grade 50. Housing shall come complete with oil level sight glass, oil fill port, oil drain port, air vent with plug, seals, and non-corrosive metallic name plates as shown on the plans. The center pivot bearing base may be submitted as a casting. All sections must have the same area as shown on the plans. Casting material shall be ASTM A27/A27M, Grade 70-36.

2. Bronze Disk: Bronze disk shall be a bronze casting, ASTM B 22, alloy C91300.

3. Steel Disk: Steel disk shall be ASTM A291/A291M, Grade 5, Class F, Brinell hardness greater than 300.

821.07.33 Counterweight Ropes for Vertical Lift Bridges: Only companies that specialize in the fabrication of wire ropes of the size and type specified shall supply counterweight ropes for vertical lift bridges hereafter referred to as counterweight ropes. Fabricate counterweight ropes in accordance with ASTM A1023/A1023M, ASTM A1007, all specifications referenced by these specifications, and the specifications listed herein unless otherwise specified on the plans. Dimensions for counterweight ropes shall be as shown on the plans.

1. Description: Provide all material, equipment, tools, and labor to fabricate, paint, lubricate, shop test, transport, install, and adjust the tension in

counterweight ropes as specified herein and in accordance with the intent of the plans and specifications.

2. Materials: All materials for counterweight ropes (including sockets) shall be new and as specified below. Main wire material, type of rope core, and galvanizing shall be selected by the Bridge Engineer and specified on the plans. If these materials have not been specified on the plans, clarify material specifications with the Bridge Engineer.

a. Main Wires: Shall be Extra Improved Plow Steel (EIPS) or Double Extra Improved Plow Steel (EEIPS).

b. Rope Cores: Shall have either a Hard Fiber Core (HFC) made of polypropylene or an Independent Wire Rope Core (IWRC).

c. Sockets: Machine from forged solid blanks of ASTM A668, Class D minimum. Sockets for 1 1/2 inch diameter wire ropes or greater may be machined from cast steel conforming to ASTM A148/A148M, Grade 80-50.

d. Shims: Fabricate from a single piece of marine duty stainless steel with a minimum yield strength of 30 ksi.

e. Cap Screw to Attach Shim: Attach shims to sockets with countersunk, flat head, hex-socket cap screws in accordance with ASTM F879, Alloy Group 1 or 2, Alloy Condition CW or CW1. Size shall be 3/8 inch diameter. Length is dependent on size of shim.

f. Zinc for Socket Connection: Connect wire rope to sockets with ASTM B6, High Grade (HG) zinc.

g. Zinc for Galvanizing: If the counterweight rope is specified to be galvanized, zinc shall be in accordance with ASTM B6, High Grade (HG).

3. Socket Fabrication: Do not fabricate sockets as a weldment. Sockets shall be as specified on the plans, shall conform to the requirements of the latest revision of Federal Specification RR-S-550, and shall be stronger than the wire rope. The socket shall not fail before the wire rope. The wire rope manufacturer shall notify the Bridge Engineer prior to fabrication if any of these requirements are in conflict.

Sockets can be supplied by an independent machine shop; however, the sockets must be attached to the wire ropes and tested by the wire rope manufacturer. Holes for cap screws shall be tapped 3/8 inch UNC, shall allow for 5/8 inch thread engagement minimum, and shall be located on opposite corners of the socket. Hot-dip galvanize all sockets after machining in accordance with ASTM A123/A123M.

4. Socket Testing:

a. Non-destructive Testing: Perform magnetic particle testing on all sockets in accordance with ASTM E709.

b. Socket Strength Test: See 821.07.33.10.

5. Wire Fabrication:

a. Main Wires: Fabricate in accordance with the current revision of ASTM A1007 and these specifications. Inner wires can be joined in accordance with ASTM A1023/A1023M except that only electric welding will be allowed. Outer wires cannot be joined.

b. Filler Wires: Fabricate according to the wire rope manufacturer's specifications.

c. Independent Wire Rope Core (IWRC): If the wire rope is specified to have an IWRC, fabricate wires in accordance with "5.1. Main Wires" except that all wires may be joined.

d. Galvanizing: If the wire rope is specified to be galvanized, the wire rope shall be final-galvanized by a hot galvanizing process, as described in ASTM A1023/A1023M, 6.4.1.

6. Wire Testing:

a. Main Wires: Wire diameter measurement, tensile testing, torsion testing, and wrap testing shall be performed in accordance with ASTM A1007 and ASTM A1023/A1023M. Take test samples at random from not less than 10 percent of the total number of wire coils from each production heat. Test samples can be taken from either end of the coils. If a test sample fails to meet any one of the testing requirements, the wire coil from which it was taken shall be rejected, and all wire coils from that production heat must then pass the testing process in order to be used on the project.

b. Filler Wires: No testing is required.

c. Independent Wire Rope Core (IWRC): If the wire rope is specified to have an IWRC, test wires in accordance with 821.07.33.6.1.

7. Strand Fabrication: Each strand shall consist of 19 main wires and six filler wires fabricated in one operation with all wires interlocking. The lay of the wires in the strands shall be such as to make the wires approximately parallel to the axis of the wire rope where it comes in contact with a circular cylinder circumscribed on the wire rope. If a strand has two or more inner wires that have been joined, the joints shall be spaced at least 25 feet apart.

8. Strand Testing: No testing is required.

9. Wire Rope Fabrication: Notify the Bridge Engineer 45 calendar days prior to fabrication of the wire rope so the Department may have an inspector present.

Fabricate in accordance with the current revision of ASTM A1023 and these specifications. Wire ropes shall be 6x19 classification with 6x25 filler wire construction. Wire ropes shall be preformed, have right regular lay, and

the maximum length of the lay shall be 7.5 times the diameter of the wire rope. Wire ropes shall have uniform physical properties in accordance with Tables 821-6 and 821-7, and shall be laid in accordance with the best industry practices.

All counterweight ropes used on one bridge structure shall be fabricated from one production length of wire rope. If this is not possible due to the amount of wire rope required, an additional production length can be used.

a. Independent Wire Rope Core (IWRC): If the wire rope is specified to have an IWRC, fabricate the IWRC in accordance with the same specifications as the wire rope, except that the classification and type of construction of the IWRC shall be in accordance with the wire rope manufacturer's standards.

b. Lubrication: Fiber cores shall be lubricated prior to fabrication of the wire rope. All other wire rope components shall be lubricated during the fabrication process. The lubricant shall contain a rust inhibitor and shall be submitted to the Bridge Engineer for review.

c. Test Segments of Wire Rope: During the wire rope fabrication process, set aside test segments of the wire rope in accordance with 821.07.33.10.1.

10. Wire Rope Testing: Notify the Bridge Engineer 45 calendar days prior to assembly of the test segments and any wire rope testing so the Department may have an inspector present.

The wire rope manufacturer shall provide proper facilities and test equipment to perform required tests. Detailed test reports shall be submitted to the Fabrication Engineer and the Bridge Engineer for review and acceptance for each test performed. Test reports shall describe all test procedures and list all test results.

a. Test Segments of Wire Rope: Test one segment from each end of each production length of wire rope used on the project. Test segments shall be at least 50 rope diameters long, but not longer than 12 feet.

b. Test Sockets: For testing purposes, select sockets at random from the sockets fabricated for use on the project. Use one span socket and one counterweight socket for each test segment. No sockets used in testing shall be used on the project.

c. Test Segment Assembly: Attach one span socket and one counterweight socket to each end of a wire rope test segment in a similar manner to that which will be used for the counterweight ropes. Clean area where the wire rope enters the socket, and make a suitable mark around the

rope adjacent to the socket such that any movement can be readily measured. Repeat process for each test segment.

d. Wire Rope Strength Test: Stress each test segment assembly until destruction. If a test segment assembly breaks before reaching the ultimate strength listed in Tables 821-6 and 821-7, select two additional test segments from that production length and retest. If either of these test segments fail the strength test, the entire production length shall be rejected. Fabricate a new production length and repeat the testing procedure.

e. Socket Strength Test: Sockets shall be stronger than the wire rope. If a socket fails during the wire rope strength test, perform the test again with four more sockets of the same type that failed (span or counterweight) selected at random from the sockets that will be used on the project. If any of these sockets fail, all sockets of that type shall be rejected. Fabricate new sockets from stronger steel or a heavier design, and retest.

During the strength test, the seating of the wire rope between the zinc and the socket shall not exceed 1/6 the diameter of the wire rope. Seating in excess of 1/6 the diameter of the wire rope shall be cause for rejection of that connection.

11. Prestretching: Lay wire rope straight and twisted to the correct lay. Paint a line along the entire length of one side of the wire rope to indicate the proper lay for installation in the field. Apply a load equal to 40 percent of the wire rope's ultimate strength as listed in Tables 821-6 and 821-7 and hold for five minutes. Reduce the load to five percent of the wire rope's ultimate strength, and repeat the process two more times. Release load.

12. Measurement of Segment Lengths: After prestretching is complete, support the wire rope at intervals no greater than 25 feet. Apply a load equal to 12 percent of the wire rope's ultimate strength to approximate the "as installed" load. Measure and cut the wire rope segments to lengths as shown on the plans. Segments shall be cut from one production length of wire rope. No splicing of the wire rope or its component strands will be allowed.

13. Socket Attachment: Notify the Bridge Engineer 45 calendar days prior to the attachment of sockets so the Department may have an inspector present.

The wire rope manufacturer shall attach the sockets to the wire rope using a molten zinc method sufficient to meet all requirements for wire rope testing specified in 821.07.33.10. Use the best industry practices to make attachments. Sockets for wire ropes that are smaller than or equal to 1 1/2 inches shall be preheated to insure zinc flows to the bottom of the socket.

Clean excess wire rope lubricant from the socket connection and any excess wire rope lubricant that may have run onto the sockets due to the heat

of the connection process. Paint a line around the wire rope where it enters the sockets so that any slippage between the wires and the zinc can be seen.

14. Proof Loading: Apply a load equal to 40 percent of the wire rope's ultimate strength as listed in Tables 821-6 and 821-7 to each counterweight rope and hold for five minutes. Remove load and inspect the connections between the wire rope and the sockets. Seating of the wire rope between the zinc and the socket shall not exceed 10 percent of the diameter of the wire rope. Seating in excess of 10 percent of the diameter of the wire rope shall be cause for rejection of that connection. Any visible movement between the individual wires of the wire rope and the zinc shall be cause for rejection of the connection. If either of these cases occurs, the wire rope manufacturer shall determine the cause of the failure, develop a new connection method, and assemble a replacement counterweight rope.

15. Measurement of Counterweight Ropes: After proof loading is complete, lay the counterweight ropes straight and twisted to the correct lay. Support the counterweight ropes at intervals not greater than 25 feet, and apply a load equal to 12 percent of the wire rope's ultimate strength to approximate the "as installed" load. Measure and record the lengths of the counterweight ropes. For counterweight ropes shorter than or equal to 100 feet in length, the measured length shall be plus or minus 1/4 inch of the design length. For counterweight ropes longer than 100 feet in length, the measured length shall be plus or minus 0.0002 times the design length. Reject counterweight rope lengths that do not conform to these tolerances.

16. Paint: If paint has been specified for the sockets, clean and apply all paint coatings in the Shop after measurement of counterweight ropes has been completed. Protect the wire rope during the cleaning and painting process.

17. Shims: To adjust for the permissible deviation in counterweight rope lengths specified in 821.07.33.15, the wire rope manufacturer shall fabricate a single, stainless steel, slotted shim (see material specification) that shall be attached to the rope end of the span socket. This shim is not load bearing, but will assist the contractor during the initial installation of the counterweight ropes by providing a visual cue for the actual counterweight rope length. Fabricate shims such that the actual counterweight rope length will be within 1/32 inch of the design counterweight rope length. Minimum shim thickness shall be 3/8 inch. Maximum shim thickness shall be two times the counterweight rope length tolerance plus 3/8 inch. For a counterweight rope 100 feet or less, this would be 7/8 inch. Attach shim to the span socket with two cap screws (see material specification). Cap screw length shall be based

upon the thickness of the shim and a minimum thread engagement in the socket of 5/8 inch.

Stamp the shim thickness and the counterweight rope number on the outward facing side of each shim.

18. Packaging and Identification: The wire rope manufacturer shall supply the assembled counterweight ropes on individual reels. Provide reels with the span socket out or the counterweight socket out, in accordance with the installer's preference. The diameter of the reels shall be not less than 25 times the diameter of the counterweight rope.

Fabricate and permanently attach a corrosion resistant metal tag to the span end of each counterweight rope. The tag shall list the wire rope manufacturer and address, the counterweight rope number, the design length, the fabricated length, shim thickness, and a number traceable to the wire rope manufacturer's production length.

19. Field Storage: Once shipped to the project site, locate counterweight rope reels such that neither the wire rope nor the sockets can come in contact with vegetation, mud, or standing water.

20. Field Installation: Conform to 820.09.6 for field installation.

Table 821-6

Physical Properties of Wire Rope with IWRC					
Diameter (in.)	Weight Per Length (Lbs/ft)	Minimum Ultimate Strength (Kips)			
		EIPS with IWRC		EEIPS with IWRC	
		Bright	Galvanized	Bright	Galvanized
1/2	0.46	26.6	23.9	29.2	26.3
9/16	0.58	33.6	30.2	37.0	33.3
5/8	0.72	41.2	37.1	45.4	40.9
3/4	1.04	58.8	52.9	64.8	58.3
7/8	1.41	79.6	71.6	87.6	78.8
1	1.85	103.4	93.1	113.8	102.4
1-1/8	2.34	130.0	117.0	143.0	128.7
1-1/4	2.89	159.8	143.8	175.8	158.2
1-3/8	3.49	192.0	172.8	212.0	190.8
1-1/2	4.16	228.0	205.2	250.0	225.0
1-5/8	4.88	264.0	237.6	292.0	262.8
1-3/4	5.66	306.0	275.4	338.0	304.2
1-7/8	6.49	348.0	313.2	384.0	345.6
2	7.39	396.0	356.4	434.0	390.6
2-1/8	8.34	442.0	397.8	486.0	437.4
2-1/4	9.35	494.0	444.6	544.0	489.6
2-3/8	10.42	548.0	493.2	602.0	541.8
2-1/2	11.60	604.0	543.6	664.0	597.6

Table 821-7

Physical Properties of Wire Rope with HFC					
Diameter (in.)	Weight Per Length (Lbs/ft)	Minimum Ultimate Strength (Kips)			
		EIPS with HFC		EEIPS with HFC	
		Bright	Galvanized	Bright	Galvanized
1/2	0.42	23.6	21.2	25.8	23.2
9/16	0.53	29.8	26.8	32.6	29.3
5/8	0.66	36.8	33.1	40.4	36.4
3/4	0.95	52.4	47.2	57.6	51.8
7/8	1.29	70.8	63.7	78.0	70.2
1	1.68	92.0	82.8	101.2	91.1
1-1/8	2.13	115.8	104.2	127.2	114.5
1-1/4	2.63	142.2	128.0	156.4	140.8
1-3/8	3.18	171.0	153.9	188.0	169.2
1-1/2	3.78	202.0	181.8	222.0	199.8
1-5/8	4.44	236.0	212.4	258.0	232.2
1-3/4	5.15	272.0	244.8	300.0	270.0
1-7/8	5.91	310.0	279.0	342.0	307.8
2	6.73	352.0	316.8	388.0	349.2
2-1/8	7.60	394.0	354.6	434.0	390.6
2-1/4	8.52	440.0	396.0	484.0	435.6
2-3/8	9.49	488.0	439.2	538.0	484.2
2-1/2	10.50	538.0	484.2	590.0	531.0

821.07.34 Counterweight Ropes for Movable Barriers: All specifications for 821.07.33 shall apply to counterweight ropes for movable barriers except as follows:

1. Socket Fabrication: When fabricating sockets, do not attach shims to sockets with cap screws.

2. Wire Rope Fabrication: When fabricating wire rope, the maximum length of the lay shall be 6.75 times the diameter of the wire rope. For barriers with two counterweight ropes on each side, provide ropes with opposite lay.

3. Shims: Do not attach load bearing shims to the sockets. Place shims in the socket holder.

4. Packaging and Identification: Attach tag to the counterweight end of each counterweight rope.

821.07.35 Operating Ropes for Movable Bridges: All specifications for 821.07.33 shall apply to operating ropes except as follows:

1. Socket Fabrication: Unless shown on the plans or directed otherwise, sockets will not be required for operating ropes. If sockets are required, shims do not need to be attached to sockets with cap screws.

2. Wire Rope Fabrication: When fabricating wire rope, the maximum length of the lay shall be 6.75 times the diameter of the wire rope. If sockets are not required for operating ropes, seize ends and weld wires together. Remove seizing at installation.

3. Shims: Unless shown on the plans or directed otherwise, shims will not be required for operating ropes. If shims are required, they shall be load bearing and not attached to the sockets.

4. Packaging and Identification: Attach tag to either end of the operating rope.

821.07.36 Shop Storage of Mechanical Equipment: Prepare and package all Shop fabricated mechanical equipment for storage in the Shop immediately after fabrication is complete in a manner that will prevent distortion, corrosion, damage, and contamination. This includes painting metal surfaces, coating unpainted metal surfaces with a corrosion preventing grease (1/32 inch min. film thickness), coating interior metal surfaces with a VSI oil, use of wooden lagging to prevent damage to machined surfaces, wrapping parts with plastic, providing wooden supports/crates, etc. Store all Shop fabricated and manufactured mechanical equipment out of the weather in a manner that prevents distortion, corrosion, damage, and contamination and in accordance with the manufacturer's recommendations. Shop must request permission from the Bridge Engineer in advance to store any mechanical equipment out of doors.

821.07.37 Delivery of Mechanical Equipment to the Project Site: Prepare and package all Shop fabricated and manufactured mechanical equipment for transport to the project site in accordance with the manufacturer's recommendations and in a manner that will protect it from the weather and from damage during transport. This may include measures in

addition to that which were taken for Shop storage.

821.07.38 Field Storage of Mechanical Equipment: As specified elsewhere, some mechanical equipment shall not be transported to the field until the Contractor is ready to install the equipment in its permanent location on the bridge structure. Uninstalled mechanical equipment at the project site must be stored out of the weather in a manner that permits easy access for identification and inspection, and prevents distortion, corrosion, damage, and contamination.

821.07.39 Field Installation of Mechanical Equipment: Provide personnel who are trained and experienced in installing the type of mechanical equipment shown on the plans. Provide millwrights to align and install open gears, shafts, gearboxes, electric motors, brakes, etc.

At all times, follow manufacturer's installation instructions and use best industry practices when installing mechanical equipment. Remove protective grease/oil by the use of approved solvents and methods prior to the application of operating grease/oil.

821.08 MECHANICAL CONSTRUCTION REQUIREMENTS FOR FACILITIES

This section sets forth general requirements for the construction of new mechanical systems and/or the renovation of existing mechanical systems for facilities, such as HVAC systems, plumbing systems, sewage treatment plants, and sewage lift stations.

821.08.1 Outdoor Mechanical Equipment Requirements: All mechanical equipment that is to be installed outdoors and exposed to the weather shall be rated for outdoor use, shall have a minimum 500 hour salt spray corrosion coating system in accordance with ASTM B17, and shall be installed in a manner to allow easy access for maintenance. All outdoor mechanical equipment with coils shall have coil guards.

All mechanical equipment and accessories mounted on roofing structures shall be installed in strict accordance with the roofing manufacturer's recommendations. Installation shall not invalidate any new or existing roofing warranties. In addition, mechanical equipment installed on a roof shall be mounted securely to the building structure such that it meets or exceeds the IBC wind load requirements for both location and elevation.

821.08.2 Potable Water Piping: All potable water pipe and fittings shall be NSF approved for potable water service and bear the "NSF 14 and NSF 61" (NSF-pw for plastic pipe) mark indicating suitability for use in transporting potable water. Test the water lines in accordance with "PIPE

TESTING" as defined below. After testing has been completed, thoroughly sterilize the entire potable water piping system as specified under "POTABLE WATER PIPING STERILIZATION" below. Piping materials shall be as follows:

1. Inside Building Walls and Under Foundations: Use copper water tube conforming to ASTM B88, Type L annealed and/or drawn tempered. No joints will be allowed under foundations. Drawn tempered copper piping may be run in walls and ceiling spaces only. Connections shall be wrought copper and copper alloy solder joint pressure fittings in accordance with ASME 16.22. Flux shall meet or exceed alloy grade ASTM B813.

2. Exposed Inside or Outside of Building: Use Schedule 40 seamless galvanized steel pipe with welded fittings conforming to ASTM A53/A53M, Type E, Grade B, standard weight. Fittings shall be galvanized in accordance with ANSI B16.4, Class 125, Standard Pattern. Galvanized pipe nipples shall be ASTM A733 made of ASTM A53/A53M or ASTM A106/A106M, Standard Weight, seamless pipe with threaded ends.

3. Underground Water Pipe and Fittings (Excluding Hydronic Piping): Use plastic pipe conforming to ASTM D2239. Plastic pipe shall be polyethylene DR 11 minimum, PE 3608, rated for a working pressure of 160 psi minimum. Working pressures which exceed 160 psi due to elevation changes or system pressures will require the use of polyethylene pipe which exceeds these working pressures. Fittings shall be of like material and have the same or greater pressure rating. Join all polyethylene piping into continuous lengths at the job site, above ground, using the butt fusion method conforming to ASTM D3261.

821.08.3 Vent Piping:

1. Concealed, Above Foundations: Vent pipe and fittings three inches in diameter and smaller installed in concealed spaces above foundations shall conform to ASTM D2665, Schedule 40. Use solvent weld joints conforming to ASTM D2564.

2. Exposed: Use Service Weight, centrifugal-coated, cast iron pipe conforming to ASTM A74 for any exposed vent pipe installation. Hubs and spigots shall have neoprene gaskets with no-hub joints conforming to ASTM C564. No exposed PVC piping shall be allowed.

821.08.4 Gravity Sanitary Waste Piping:

1. Concealed, Exposed, and Below Foundations: Use Service Weight, centrifugal-coated cast iron pipe meeting ASTM A74, hub and spigot with neoprene gaskets with no-hub joints conforming to ASTM C564.

2. Underground (Outside Foundations): Use plastic pipe and fittings conforming to ASTM D2665, Schedule 40 with solvent weld joints conforming to ASTM D2564.

821.08.5 Forced-Main Sanitary Waste Piping:

1. Above Ground: Use Schedule 40 seamless galvanized steel pipe with welded fittings conforming to ASTM A53/A53M, Type E, Grade B, standard weight. Fittings shall be galvanized in accordance with ANSI B16.4, Class 125, Standard Pattern. Galvanized pipe nipples shall be ASTM A733 made of ASTM A53/A53M or ASTM A106/A106M, Standard Weight, seamless pipe with threaded ends.

2. Underground: Use plastic pipe conforming to ASTM D2239. Plastic pipe shall be polyethylene DR 11 minimum, PE 3608, rated for a working pressure of 160 psi minimum. Working pressures which exceed 160 psi due to elevation changes or system pressures will require the use of polyethylene pipe which exceeds these working pressures. Fittings shall be of like material and have the same or greater pressure rating. Join all polyethylene piping into continuous lengths at the job site, above ground, using the butt fusion method conforming to ASTM D3261.

821.08.6 Hydronic Piping:

1. Above Ground: Use ASTM A53/A53M Schedule 40, seamless black pipe with grooved ends for piping equal to 3 inches in diameter and above. Join pipe sections and fittings together using either welded (plain end) or grooved mechanical joint type rigid and flexible pipe couplings. Piping under 3 inches in diameter shall be copper water tube conforming to ASTM B88, Type L hard drawn. Connections shall be wrought copper and copper alloy solder joint pressure fittings in accordance with ASTM B32. Flux shall meet or exceed alloy grade ASTM B813.

2. Underground: Use a pre-insulated piping system with 1½ inch polyurethane insulation and with a 0.070 inch minimum thick, high-density, black industrial grade polyethylene jacket. Carrier pipe shall be standard weight carbon steel, ASTM A53/A53M Grade B, Type E, Schedule 40. The pre-insulated pipe shall be in unitized factory pre-fabricated sections. Pipe shall be rated for use with chilled water systems. Insulation shall be 90 to 95 percent formed-in-place closed-cell polyurethane with 2 pounds per cubic foot density, completely filling the annular space between the carrier pipe and pipe casing. Thermal conductivity shall be a minimum of 0.16 BTU-in/(hr-ft^2-°F) at 73°F. Pipe shall be pressure tested at 150 psig for a minimum of 24 continuous hours in the presence of the Project Engineer or representative. After hydrostatic testing of the pipe, insulate field joint with kits provided by

the pre-insulated pipe manufacturer. Apply field joint insulation in straight sections by pour forming in-situ using molds furnished by system manufacturer. Seal field joint insulation surface with heat shrinkable sleeve. Insulation and jacket on all fittings shall be factory-applied after pipe spool fabrication, extending continuously onto adjoining straight sections of pipe.

821.08.7 Natural Gas Piping:

1. Above Ground: Use ASTM A53/A53M, black steel, Schedule 40, Type E or S, Grade B. Malleable-iron threaded fittings shall be ASME B16.3, Class 150, standard pattern. Unions shall be ASME B16.39, Class 150, malleable iron with brass-to-iron seat, ground joint, and threaded ends.

2. Underground: Use polyethylene plastic pipe and fittings conforming to ASTM D2513. Piping shall be marked "gas" and "ASTM D2513." Join all polyethylene piping into continuous lengths at the job site, above ground, using the butt fusion method ASTM D3261 with dimensions matching PE pipe. Polyethylene pipe shall be yellow in color conforming to ANSI/ASME A13.1 standard.

3. Painting: Paint exterior and exposed interior gas piping from the service point (gas regulator/meter) to gas appliance connections. Prepare pipe surfaces to receive paint using solvent cleaners in accordance with SSPC-SP1 and hand tool method in accordance with SSPC-SP2. All pipe scheduled for painting shall be clean, dry, and in sound condition free of rust, oil, grease, and other contaminants. Use one coat of a metal alkyd primer and two finish coats of high-solids, alkyd industrial enamel. Gas pipe color shall be yellow and shall meet ANSI/ASME A13.1.

821.08.8 Refrigerant Piping: Use seamless copper tube conforming to ASTM B280, Type ACR for air conditioning and refrigeration field service. Fittings and unions shall conform to ASME B16.22. Solder shall conform to ASTM B32, 95-5, tin antimony, or alloy HB solder to join copper socket fittings on copper pipe. Brazing filler metals shall comply with AWS A5.8. A moisture flow and sight glass indicator shall be installed in the piping.

821.08.9 Pipe Insulation Materials:

1. Mineral-Fiber, Preformed Pipe Insulation: Type I, 850 ºF. Mineral or glass fibers shall be bonded with a thermosetting resin. Comply with ASTM C547, Type I, Grade A. Mineral-fiber adhesive shall comply with MIL-A-3316C, Class 2, Grade A.

2. Flexible Elastomeric Pipe Insulation: Closed-cell, sponge, or expanded-rubber materials. Comply with ASTM C534, Type I for tubular materials. Flexible elastomeric adhesive shall comply with MIL-A-24179A, Type II, Class I.

3. Mastics: Materials shall be compatible with insulation materials, jackets, and substrates; comply with MIL-PRF-19565C, Type II.

821.08.10 Insulation Type and Thickness:

1. Exposed Interior Potable Water Piping: Mineral fiber; 1 inch thick.
2. Exposed Exterior Potable Water Piping: Mineral fiber, 2 inches thick.
3. Interior Hydronic Piping: Mineral fiber; 2 inches thick.
4. Exterior Hydronic Piping: Mineral fiber; 3 inches thick.
5. Refrigerant Piping: Flexible elastomeric; 2 inches thick.

821.08.11 Pipe Jackets: Install the following types of piping jackets and markers on all exposed above ground piping:

1. Exterior: Cover exposed exterior insulated piping with an aluminum jacket, complying with ASTM B209, Alloy 3003, 3005, 3105, or 5005, Temper H-14. Sheet and roll stock shall be ready for shop or field sizing. Finish and thickness shall be a minimum of 0.032 inch. Moisture barrier for outdoor applications shall be 3-mil thick, heat-bonded polyethylene and kraft paper. Factory fabricated fitting covers shall have the same material, finish, and thickness as the jacket.

Use preformed 2-piece or gore, 45- and 90-degrees, short- and long-radius elbows, tee covers, flange and union covers, end caps, beveled collars, and valve covers. Use field fabricated fitting covers only if factory fabricated fitting covers are not available.

2. Interior: Cover exposed insulated piping in mechanical rooms with a 20-mil minimum PVC jacket, meeting ASTM D1784, Class 16354-C. PVC jacket shall be rated to a 150°F temperature limit. Clean insulation surface thoroughly before application of PVC jacket. Factory fabricated fitting covers shall have the same material, finish, and thickness as jacket.

Use preformed 2-piece or gore, 45- and 90-degree, short- and long-radius elbows, tee covers, flange and union covers, end caps, beveled collars and valve covers. Use field fabricated fitting covers only if factory fabricated fitting covers are not available.

3. Colors: Colors shall be in accordance with ANSI/ASME A13.1 and Table 821-8.

Table 821-8

Pipe Jacket Colors	
Type of Pipe	**Color**
Chilled Water	Blue
Hot Water	Orange
Fire Suppression Systems	Red
City Water (Makeup)	White
Natural Gas	Yellow
Process Water	Purple

4. Pipe Markers: For pipes located in mechanical rooms in buildings, provide and install pipe markers to indicate direction of flow. Apply markers so as to remove any doubt as to the circulation characteristics of the system. Markers shall be plastic wrap-around type with lettering a minimum of 1/2 inch in height on pipe sizes up to NPS 6. Markers on pipe sizes larger than NPS 6 shall be plastic strap-retained, secured with nylon ties with lettering a minimum of 1-1/4 inches in height. Pressure adhesive markers will not be allowed. Lettering and background color shall be as specified in ANSI/ASME A13.1 and Table 821-9.

Table 821-9

Pipe Marker Colors			
Type of Pipe	**Label**	**Text Color**	**Background Color**
Chilled Water Supply	CHWS	White	Green
Chilled Water Return	CHWR	White	Green
Hot Water Supply	HWS	White	Green
Hot Water Return	HWR	White	Green
City Water (Makeup)	City Water	White	Green
Natural Gas	Gas	Black	Yellow
Process Water	Process Water	White	Green
Fire Suppression	Fire Sprinkler	White	Red
Compressed Air	Compressed Air	White	Blue

821.08.12 Pipe Installation (All Pipe): Install all piping in a neat, workmanlike manner. Mark each length of pipe and each pipe fitting in accordance with the approved standard and specification to which it is manufactured. Install piping so as to eliminate air pockets and permit drainage. Provide air relief at all high points and drains at all low points. Make allowances for expansion and contraction. Pipe all air vents to drain.

Slope horizontal soil waste and drain pipe as shown on the plans, or where not specifically indicated, grade in the direction of flow at 1/4 inch per foot for pipe diameters of less than 4 inches and 1/8 inch per foot on line sizes of 4 inches or greater.

Make changes in pipe size on soil, waste, and drain lines using reducing fittings, recessed reducers, or flush bushings. Make all changes in direction using long radius fittings, except that sanitary tees may be used on vertical stacks, and short quarter bends or elbows may be used where the change is from horizontal to vertical. Where it becomes necessary because of space conditions to use short radius fittings in any other location, obtain permission from the Project Engineer before installation.

Where pipes extend through roof or outside walls, flashings will be required for weatherproofing. Roof and wall flashings shall be in strict accordance with the state sanitary code and the roofing manufacturer's requirements.

Where pipes pass through walls and floors, provide weather tight stainless steel split plate escutcheons. Escutcheons shall be 16 gauge 300 series stainless steel with a satin finish and spring clip fasteners. Escutcheons shall fit snuggly around the pipe outer diameter and shall cover the entire wall opening.

Support suspended piping every four feet using beam clamps or beam clamps in combination with anchor rods and hangers. Install pipe supports so as not to damage insulation or jacketing. All beam clamps, anchor rods, hangers, and associated hardware shall be marine grade stainless steel.

Underground piping shall be as follows:

1. Bury piping a minimum of 36 inches below grade and a minimum of 60 inches below roadway surface. Water lines shall not be buried in the same trench as sewer lines.
2. Pipe trench excavation shall be in accordance with 701.03.
3. Install underground piping with restrained joints at horizontal and vertical changes in direction. Use restrained-joint piping, thrust blocks, anchors, tie-rods and clamps, and other supports. Concrete shall be Class A in accordance with Section 901.

4. Place and tamp a 4-inch thick layer of sand in the trench to provide uniform bedding for the piping system. After piping is installed, evenly backfill the entire trench with sand in 6-inch compacted layers to a minimum height of 6 inches above the top of the insulated piping system. Evenly and continuously backfill the remaining trench in uniform layers with select fill in accordance with Section 701 to the finished grade level.

5. Hydroseed backfilled areas in accordance with Section 739; seed species to match existing.

6. Provide detectable warning tape on all underground non-metallic lines. Use acid and alkali-resistant, PE film warning tape manufactured for marking and identifying underground utilities, a minimum of 6 inches wide and 4 mils thick, continuously inscribed with a description of the utility. The tape shall have a metallic core encased in a protective jacket for corrosion protection, detectable by metal detector when tape is buried up to 30 inches deep. Follow APWA and ANSI/ASME A13.1 for installation and color requirements.

821.08.13 Pipe Testing:

1. Pressure Piping Systems: Test for leaks at 50 psi above working pressure or 100 psi whichever is greater for a minimum of four hours before placing slabs, closing walls, ceilings or before backfilling. Repair leaks found by replacing the entire defective section and retest the system until proven free of defects. Perform testing in the presence of the Project Engineer or his representative.

2. Gravity Piping Systems: Test for four hours under a head of 10 feet and show no leaks. Provide a copy of the manufacturer's recommended testing procedure to the Project Engineer prior to the test and use as the basis for inspection. Repair leaks found by replacing the entire defective section and retest the system until proven free of defects. Perform testing in the presence of the Project Engineer or his representative.

3. Gas Piping Systems: Test and purge in accordance with NFPA 54.

4. Refrigerant Line Testing: Comply with ASME B31.5, Chapter VI. Test refrigerant piping and specialties. Isolate compressor, condenser, evaporator, and safety devices from test pressure if they are not rated above the test pressure. Test high and low pressure side piping of each system separately at no less than 300 psig for suction lines, 535 psig for heat pumps, and no less than 535 psig for liquid and hot gas lines. Fill system with nitrogen to the required test pressure. System shall maintain test pressure at the manifold gauge throughout duration of test. Test joints and fittings with electronic leak detector or by brushing a small amount of soap and glycerin solution over joints. Remake leaking joints using new materials, and retest until satisfactory

results are achieved.

821.08.14 Heat Trace Wiring for Freeze Protection: Use heat trace wiring to protect water piping from freezing in outdoor and unconditioned areas. Heat trace wiring shall be listed and labeled as defined in NFPA 70, by a qualified testing agency, and marked for intended location and application. All components shall be from the same manufacturer. Do not exceed the maximum wire length list by the manufacturer for a given electrical circuit size.

1. Ambient Thermostats for Freeze Protection: Shall have an ambient-sensing probe with adjustable temperature range from 0 to 225 ºF. Switch shall be snap action, open-on-rise, single pole with minimum current rating adequate for connected cable. Shall have a resistance temperature device or thermistor for sensing ambient air temperature, and a NEMA 4X enclosure.

2. Heating Element: Heating elements shall consist of a pair of parallel No. 16 AWG, tinned, stranded copper bus wires embedded in cross-linked conductive polymer core, which vary heat output in response to temperature along its length. Terminate with waterproof, factory-assembled, non-heating leads with connectors at one end, and seal the opposite end watertight. Cable shall be capable of crossing over itself once without overheating. Electrical insulating jacket shall be flame-retardant polyolefin. Cable cover shall be tinned-copper braid and polyolefin outer jacket with ultraviolet inhibitor.

3. Cable Installation: Cable installation accessories include fiberglass tape, heat-conductive putty, cable ties, silicone end seals and splice kits, and installation clips all furnished by the manufacturer, or as recommended in writing by the manufacturer.

821.08.15 Potable Water Piping Sterilization: Sterilize the potable water piping system in the presence of the Project Engineer or other designated Department representative.

Clean interior of new domestic water piping system. Remove dirt and debris as work progresses. Before using, purge new piping and parts of existing piping that have been altered, extended, or repaired. Use purging and disinfecting procedures prescribed by authorities having jurisdiction (AHJ). If methods are not prescribed, use procedures described in either AWWA C651 or AWWA C652 or the following procedure:

1. Flush piping system with clean, potable water until clean water appears at all outlets.

2. Sterilize system according to either of the following:

a. Fill potable water system or part thereof with a water/chlorine solution that has at least 50 ppm of chlorine. Isolate with valves and allow to

stand for 24 hours.

b. Fill potable water system or part thereof with a water/chlorine solution that has at least 200 ppm of chlorine. Isolate with valves and allow to stand for three hours.

3. After the standing times are complete, flush the system with clean, potable water until no chlorine can be detected coming from any outlets.

4. Repeat procedures if biological examination shows contamination.

5. When no contamination is found, submit water samples in sterile bottles to authorities having jurisdiction (AHJ).

6. Prepare and submit reports of purging and disinfecting activities, including test reports.

821.08.16 Plumbing Specialties: Plumbing fixtures shall be rigidly supported and fitted with necessary trimmings. Exposed metal parts, trim, brackets, drains, supply lines, etc. shall have a chrome-plated finish. Flexible supply hoses shall be braided stainless steel with compression fittings on one end and pipe thread on the other end, and shall comply with ASME 112.18.6. Fixtures shall have a water seal trap of not less than two inches or greater than four inches. Traps shall have cleanouts, and shall be placed as close to the fixture as possible. Immediately after installation of plumbing fixtures, cover each fixture with a fixture protector. Each fixture shall have an accessible shut-off valve in the water supply line that allows the fixture to be shut-off without interfering with the water supply to any other fixture. Shut-off valves shall comply with ASME A112.18.1/CSA B125.1.

All pipes passing through walls shall have stainless steel escutcheons on finished sides of walls. All escutcheons shall be held in place by stainless steel set screws. Plumbing fixtures in publically accessible buildings shall comply with all ADA requirements. Water hammer arrestor devices shall be installed at each individual fixture. Water hammer arrestors shall be 1-1/2 inches copper pipe, 18 inches high. Supply and install the quantity and type of plumbing fixtures in the locations as shown on the plans in full accordance with the manufacturer's instructions and the LSAC and LPC.

821.08.17 Natural Gas Accessories: Fixtures shall have individual shut-off valves consisting of two-piece, full-port, bronze ball valves with bronze trim: MSS SP-110. Install flexible connectors from each fixture to the shut-off valve on equipment. Flexible connectors shall comply with ANSI Z21.26 and Z21.75. Install appliance regulators where required. Install dielectric unions where required conforming to ASSE 1079. Install line and equipment regulators conforming to ANSI Z21.80a where required.

821.08.18 Water Closet - Close Coupled (Gravity Tank) Type: Provide commercial grade water closets and accessories that conform to ASME A112.19.2/CSA B45.1 and ASME A112.19.5. Use wall or floor mounted water closets as specified. Provide wall carriers on all wall mounted water closets. Comply with ADA if required. Close coupled type water closets shall have the following features:

1. Material: Vitreous china.
2. Bowl Type: Siphon Jet.
3. Height: Standard or as required by ADA, if applicable.
4. Rim Contour: Elongated.
5. Water Consumption: 1.6 gal per flush.
6. Color: White.
7. Fasteners: Marine Grade Stainless Steel.

821.08.19 Water Closet - Top Spud (Flush Valve) Type: Provide commercial grade water closets and accessories that conform to ASME A112.19.2/CSA B45.1 and ASME A112.19.5. Use wall or floor mounted water closets as specified. Provide wall carriers on all wall mounted water closets. Comply with ADA if required. Top spud type water closets shall have the following features:

1. Material: Vitreous china.
2. Bowl Type: Siphon Jet.
3. Height: Standard or as required by ADA, if applicable.
4. Rim Contour: Elongated.
5. Water Consumption: 1.6 gal per flush.
6. Spud Size and Location: NPS 1-1/2; top.
7. Color: White.
8. Flushometer Valve: Comply with ASSE 1037. Provide with diaphragm, integral check stop device, integral backflow prevention device, exposed brass body with corrosion resistant components, a lever handle, chrome plated finish (US26D), and an NPS 1 minimum inlet.

821.08.20 Toilet Seats: Provide toilet seats that conform to IAPMO/ ANSI Z124.5. Toilet seats shall have the following features:

1. Material: Plastic.
2. Type: Commercial (Standard).
3. Shape: Elongated rim, closed front.
4. Hinge: Check.
5. Hinge Material: Stainless steel; concealed.
6. Seat Cover: Required.
7. Color: White.

821.08.21 Lavatories: Provide commercial grade lavatories and accessories that conform to ASME A112.19.3/CSA B45.4 and NSF 61. Use wall or countertop mounted lavatories as specified. Provide wall carriers on all wall mounted lavatories. Use and install in accordance with ADA requirements where required. Lavatories shall have the following features:

1. Material: Vitreous china.
2. Color: White.
3. Bowl Type: Rectangular.
4. Size: As specified or as required by ADA, if applicable.
5. Height: Standard or as required by ADA, if applicable.
6. Mounting: For countertop type, provide material sealant and under-counter mounting kit. For wall-mounted type, provide chair carrier.
7. Fasteners: Marine grade stainless steel.

821.08.22 Sinks: Provide commercial grade sinks and accessories that comply with ASME A112.19.2/CSA B45.1 and NSF 61. Use and install in accordance with ADA requirements where required. Sinks shall have the following features:

1. Material: 0.050-inch stainless steel.
2. Finish: Satin stainless steel.
3. Bowl Type: Compartments are to be as specified on the plans.
4. Size: As specified or as required by ADA, if applicable.
5. Height: Standard or as required by ADA, if applicable.
6. Mounting: Material sealant and under-counter mounting kit.
7. Fasteners: Marine grade stainless steel.

821.08.23 Faucets: Provide two-handle center set faucets with rigid gooseneck spouts that conform to ASME A112.18.1/ANSI A117.1 and NSF 61. Device is to be certified as lead free. Faucets shall have the following features:

1 Material: Solid Brass Construction.
2. Finish: Polished chrome – US26D.
3. Type: 4-inch lever handles with rigid gooseneck spout.
4. Height: Standard or as required by ADA if applicable.

5. Valve Type: Ceramic disc.
6. Fasteners: Marine grade stainless steel.

821.08.24 Water Coolers: Provide commercial grade water coolers and accessories that comply with NSF 61 and ASHRAE 34, "Designation and Safety Classification of Refrigerants," for water coolers. Provide HFC 134a (tetrafluoroethane) refrigerant unless otherwise indicated. Use flush-to-wall mounted type water coolers and provide wall carriers. Provide bi-level type water coolers and install in accordance with ADA requirements, where required.

1. Cabinet Material: Stainless steel.
2. Finish: Satin finish stainless steel.
3. Bowl Type: Rectangular
4. Size: As specified or as required by ADA, if applicable.
5. Height: Standard or as required by ADA, if applicable.
6. Mounting: Chair carrier.
7. Bubbler: One with adjustable stream regulator, located on deck.
8. Control: Push button
9. Fasteners: Marine grade stainless steel.

821.08.25 Tank Water Heaters (Electric): Provide electric tank water heaters that conform to UL 1453. Water heaters shall have the following features:

1. Storage-Tank: ASME-code steel pressure rated for 150 psig. Tappings shall be factory fabricated of materials compatible with tank and piping connections. Attach tappings to tank before testing. Interior finish shall comply with NSF 61 barrier materials for potable-water tank linings, including extending lining material into tappings.
2. Anode Rod: Replaceable magnesium.
3. Drain Valve: Corrosion-resistant metal complying with ASSE 1005.
4. Insulation: Comply with ASHRAE/IESNA 90.1.
5. Jacket: Steel with enameled finish.
6. Heating Elements: Electric, screw-in or bolt-on immersion type, arranged in multiples of three.
7. Temperature Control: Adjustable thermostat.
8. Safety Controls: High-temperature-limit and low-water cutoff devices or systems.
9. Relief Valves: ASME rated and stamped for combination temperature-and-pressure relief valves. Include one or more relief valves with total relieving capacity at least as great as heat input, and include pressure setting less than domestic-water heater working-pressure rating. Select one relief

valve with sensing element that extends into storage tank. The drain is to be piped inside of an exterior wall and penetrate the wall outside 12 inches above finished grade.

821.08.26 Water Heater Accessories:

1. Drain Pan: Use 16 gauge marine grade stainless steel. Sides are a minimum of 3 inches in height and a minimum of 3 inches wider than sides of the storage tank. The drain is to be piped inside of an exterior wall and penetrate the wall outside 12 inches above finished grade. If located in a mechanical room, pipe drain lines to nearest floor drain.

2. Temperature and Pressure Piping: Use copper water tube conforming to ASTM B88, Type L drawn tempered. Drawn tempered copper piping may be run in walls and ceiling spaces only. Connections shall be wrought copper and copper alloy solder joint pressure fittings in accordance with ASME 16.22. Flux shall meet or exceed alloy grade ASTM B813.

3. Cold Water Shut-off Valve: Provide a gate valve (specified below) on the entering cold water line.

4. Tank Drain Valve: Provide a gate valve (specified below) on the exiting hot water line, mounted below the water tank, if no means to drain the water tank is provided by the manufacturer.

5. Gate Valves: The gate valve shall conform to MSS SP-80, Type 2, be Class 125, and have a CWP rating of 200 psig. Body shall be bronze with integral seat and screw-in bonnet, and ends shall be threaded or soldered joint. Hand wheel shall be malleable iron, bronze or aluminum. Valve stem shall be bronze, disc shall be a solid bronze wedge, and packing shall be asbestos free.

821.08.27 Split System Air Conditioners - 5 Tons or Less - Electric Heat:

1. Air Handling Units:

a. Chassis: Galvanized steel with flanged edges, faced glass fiber duct liner, and removable insulated panels for servicing.

b. Electrical: Provide a single point power connection and breaker sized in accordance with the manufacturer's recommendation and NEC code requirements. See Section 822 for electrical requirements.

c. Expansion Coil: Provide with copper tube, mechanically bonded aluminum fins, and an expansion valve. Comply with ARI 206/110.

d. Electric Heating Coil: Provide with helical, nickel-chrome, resistance wire heating elements with refractory ceramic support bushings, automatic reset thermal cutout, built-in magnetic contactors, manual reset thermal cutout, airflow proving device, and one time fuses in terminal box for over current protection.

e. Fan: Provide with double-width wheel of galvanized steel, and forward-curved blades. Fan shall be directly connected to the motor.

f. Fan Motor: Provide a multi-tapped, multi-speed motor with internal thermal protection, permanent lubrication, and a plug connection. Motor shall comply with NEMA designation, temperature rating, service factor, enclosure type, and efficiency requirements as specified.

g. Air Filtration Section: Provide filter holding frames arranged for flat or angular orientation, with access doors on both sides of the unit. Filters shall be removable from one side or by lifting out from the access plenum. Provide permanent cleanable filters. Air filtration section shall comply with NFPA 90A. Minimum resistance shall be in accordance with ASHRAE 52.1, and MERV shall be in accordance with ASHRAE 52.2.

h. Condensate Drain Pan: Provide with one percent slope in at least two planes to collect condensate from cooling coils (including coil piping connections, coil headers, and return bends) and humidifiers, and to direct water toward drain connection. Drain pan shall have a minimum height of three inches, and a length and width that extends a minimum of three inches beyond the air handling unit. Provide a float switch on the drain pan to de-energize the air conditioning system when positive contact is made. Fabricate drain pan from a single-wall, 16 gauge, marine grade stainless-steel sheet. Provide a drain connection located at the lowest point of the drain pan and size to prevent overflow. Terminate with threaded nipple on one end of drain pan. Connection size to be a minimum of 1 inch.

2. Condensing Units:

a. Casing: Steel finished with baked enamel in color selected by the Architect, with removable panels for access to controls, weep holes for water drainage, and mounting holes in base. Mounting base shall be polyethylene. Provide brass service valves, fittings, and gauge ports on exterior of casing.

b. Electrical: Provide a single point power connection and disconnect sized as per the manufacturer's recommendation and as per NEC code requirements. See Section 822 for electrical requirements.

c. Compressor: Provide a scroll type with two speeds, a manual reset high pressure switch, and an automatic reset low pressure switch. Compressor shall be hermetically sealed, have a crankcase heater, and be mounted on a vibration isolation device.

d. Compressor Motor: Provide with thermal and current sensitive overload devices, a start capacitor, a relay, and contactor.

e. Condensing Coils: Provide with copper tubing, mechanically bonded aluminum fins, and liquid subcooler. Condensing coils shall comply with ARI 206/110be.

f. Refrigerant: R-410A.

g. Fan: Aluminum propeller type directly connected to motor.

h. Fan Motor: Permanently lubricated, with integral thermal overload protection.

i. Low Ambient Kit: Shall allow operation down to 45 ºF.

3. Thermostat: Low voltage with subbase to control compressor and evaporator fan. Shall have "heat-off-cool" and "on-auto" selector switches. All thermostat wiring shall be installed in accordance with Section 822.

a. Display: Provide Liquid-crystal display to indicate room temperature, set-point temperature, time setting, operating mode, and fan speed.

b. Automatic Reset Timer: Provide to prevent rapid cycling of the compressor.

4. Accessories:

a. Refrigerant Line Kits: Provide soft-annealed, factory cleaned, copper suction and liquid lines, dried, pressurized, and sealed. Suction line shall be factory insulated with flared fittings at both ends.

b. Condensate Drain Piping: Provide copper water tube conforming to ASTM B88, Type L, drawn tempered. Copper piping may be run in walls and ceiling spaces only. Connections shall be made wrought copper and copper alloy solder joint pressure fittings in accordance with ASME 16.22. Flux shall meet or exceed alloy grade ASTM B813.

c. Firestats: For systems with a supply air of less than 2000 cfm, provide firestats with a dust protected steel enclosure and a baked enamel finish, a relay rated to interrupt the fan motor-control circuit to de-energize the air handler on a temperature rise in excess of 125ºF, and a manual reset. Locate in the return air intake. Install in accordance with the manufacturer's instructions.

d. Duct Smoke Detectors: For systems with a supply air of greater than 2000 cfm, provide duct smoke detectors in accordance with NFPA 90A. Duct smoke detectors shall be photoelectric type in accordance with UL 268A. Provide with a weatherproof housing in accordance with NEMA 250, Type 4X; NRTL, and listed for use with the supplied detector for smoke detection in HVAC system ducts. Provide with a relay rated to interrupt the fan motor-control circuit to de-energize the air handler on the detection of smoke in the

ductwork. Locate in both the supply and return air ducts. Install in accordance with the manufacturer's instructions.

821.08.28 Split System Ductless HVAC System: Provide a unit that includes a factory test log sheet for each unit consisting of the unit tested pressures, temperatures and amperage, as tested prior to shipment.

1. Indoor Ceiling-Mounted Cassette Units (5 Tons Or Less): Where specified, provide a ceiling cassette fan coil unit, operable with R-410A refrigerant, equipped with an electronic expansion valve, for installation into the suspended ceiling with an air panel grille, and factory-tested prior to shipment. Provide each component as follows:

a. Chassis: Galvanized steel, polyethylene insulation.

b. Panel Grille: Impact-resistant polypropylene; White.

c. Outside Air Intake: Integral, side mounted.

d. Fan: Direct-drive, turbo fan type with statically and dynamically balanced impeller with high, medium, and low speeds available.

e. Refrigerant Coils: Direct expansion type, copper tubes mechanically bonded with aluminum fins; charged with dehydrated air prior to shipment from the factory.

f. Air Distribution: Four-way.

g. Filter: Long-life, washable with mildew-proof resin.

h. Condensate: 21-inch lift mechanism provided with built-in safety alarm.

i. Controls: Provide with a self diagnostic function, three minute time delay, automatic restart, emergency operation function, and test run switch.

2. Indoor Wall-Mounted Units (5 Tons Or Less): Wall-mounted fan coil unit, operable with R-410A refrigerant, equipped with an electronic expansion valve, for installation onto a wall within conditioned space, and factory-tested prior to shipment.

a. Cabinet: Galvanized steel frame, affixed to a factory-supplied wall mounting template and located in conditioned space; polyethylene insulation.

b. Fan: Direct-drive, cross-flow; statically and dynamically balanced impeller with high and low fan speeds; thermally protected.

c. Refrigerant Coils: Direct expansion type, copper tubes mechanically bonded with aluminum fins; charged with dehydrated air prior to shipment from the factory.

d. Controls: Provide with a self diagnostic function, three minute time delay, automatic restart, emergency operation function, and test run switch.

3. Outdoor Units (5 Tons Or Less): Direct expansion (DX), air-cooled heat pump, with variable speed, inverter-driven compressors. Unit shall be

factory assembled and pre-wired with all necessary electronic and refrigerant controls.

Unit shall be capable of providing heating to indoor units at 0ºF ambient temperature without additional low-ambient controls or auxiliary heat source.

The condensing unit shall automatically restart following power failure and will not cause any settings to be lost.

a. Refrigerant: R-410A.

b. Cabinet: Weatherproof; galvanized steel with corrosion-resistant baked enamel finish.

c. Fan: Direct-drive, propeller type with multiple speed operation; permanently-lubricated bearings.

d. Compressor Type: Scroll.

e. Coils: Copper tubes mechanically bonded with aluminum fins; fins shall have anti-corrosion acrylic resin.

f. Safety Devices: Provide a high pressure sensor and switch, a low pressure switch, control circuit fuses, crankcase heater, fusible plug, overload relay, inverter overload protector, thermal protector for compressor and fan motors, over current protection for inverter, and anti-recycling timers.

g. Controls: Provide zone thermostats where indicated on the drawings. Thermostat shall have "heat-off-cool" and "on-auto" selector switches, and be from the same manufacturer as the system.

System shall provide constant fan operation or automatic fan operation on both the heating and cooling cycles.

h. Air Filters: Provide factory-manufactured, gasketed, framing systems and accessories. Provide and maintain temporary air filters during construction and install permanent filters after final acceptance.

821.08.29 Circular and Rectangular Rigid Ductwork: Size and locate circular and rectangular rigid ductwork as scheduled on the plans. Ductwork shall be galvanized steel, lock forming quality, conforming to ASTM A653 having G90 coating designation.

1. Ductwork Construction and Installation: Construct ductwork in accordance with SMACNA Duct Construction Standards – Metal and Flexible based on indicated static-pressure class unless otherwise indicated.

a. Collars: Always use collars when appropriate for duct transitions.

b. Bends: Radii of bends shall not be less than 1.5 times the width of the duct on centerline unless otherwise indicated on the plans.

c. Transitions: Offset angles of transitions shall not exceed 20 degrees.

d. Dampers: Provide galvanized (G90) lockable spin-in type manual dampers for all diffuser branch lines as required for air balancing and on all

individual duct runs. Install dampers a minimum of two duct widths from branch takeoff. Provide a minimum thickness of 26 gauge galvanized steel with 2 inches extension handles.

e. Hanger Materials: Provide electro galvanized, all-thread rods. Straps and rod sizes shall be galvanized (G90) and shall comply with SMACNA's HVAC Duct Construction Standards – Metal and Flexible for steel sheet thickness and for steel rod diameters. Ductwork shall be supported so as not to crush or damage insulation.

f. General Sealant and Gasket Requirements: Surface-burning characteristics for sealants and gaskets shall be a maximum flame-spread index of 25 and a maximum smoke-developed index of 50 when tested according to UL 723; certified by an NRTL. Whether required or not by SMACNA standards, seal all joints and seams on all duct systems. Apply sealant to male end connectors before insertion and afterward to cover entire joint and sheet metal screws. Seal duct seams and joints according to SMACNA's HVAC Duct Construction Standards – Metal and Flexible for duct pressure class or nearest class requiring continuous sealing.

g. Firewall Penetrations: Where ductwork passes through fire-rated interior partitions and exterior walls, install appropriately rated fire dampers, sleeves, and fire-stopping sealant that meet or exceed NFPA requirements and as per the wall UL listing.

821.08.30 Ductwork Insulation: All ductwork shall be externally insulated. Provide insulation that is a minimum of 2-1/8 inches thick with a nominal density of 0.75 pounds/cubic foot.

1. Insulation: Provide mineral or glass fibers bonded with a thermosetting resin. Comply with ASTM C553, Type II and ASTM C1290, Type III with factory-applied FSK jacket. Insulation shall have a minimum installed thickness of 2 1/8 inches and a nominal density of 0.75 pounds/cubic foot.

2. Mineral-Fiber Adhesive: Comply with MIL-A-3316C, Class 2, Grade A.

3. ASJ Adhesive and FSK Jacket Adhesive: Comply with MIL-A-3316C, Class 2, Grade A for bonding insulation jacket lap seams and joints.

4. Mastic: Materials shall be compatible with insulation materials, jackets, and substrates; comply with MIL-PRF-19565C, Type II

5. FSK Tape: Foil-face, vapor-retarder tape matching factory-applied jacket with acrylic adhesive. Shall comply with ASTM C1136. Tape shall be minimum three inches wide, 6.5 mils thick, 90 ounces force per inch width adhesion, two percent elongation, and 40 lbf per inch width tensile strength. Precut disks or squares of FSK tape may also be used.

6. Exterior Ductwork Jacket: In addition to the external insulation, exterior ductwork shall have a weatherproof flexible jacket with SMACNA Class A seals.

821.08.31 Flexible Connectors (HVAC): Where ducts are to be fastened to the intake or discharge of an air-moving device, provide a flexible connection between the duct and fan.

1. Material: Use glass fabric, double coated with weatherproof, synthetic rubber, resistant to UV rays and ozone.
2. Minimum Weight: 24 ounces/sq yd.
3. Tensile Strength: 530 lbf/inch in the warp and 440 lbf/inch in the filling.
4. Service Temperature: Minus 50 to plus 250 ºF.
5. Compliance: Flexible connectors shall be in accordance with NFPA 45 and 90A and shall not provide pockets of stagnation or concentrations of vapor.

821.08.32 HVAC Testing, Adjusting, and Balancing: Projects containing new or renovated HVAC systems shall be balanced to the requirements set forth in this subsection. HVAC systems shall be tested, adjusted, and balanced to set the proper airflow and water flow within distribution systems, including sub mains, branches, and terminals to indicate quantities according to the specified tolerances; adjusting total HVAC systems to provide quantities indicated on the plans; measuring electrical performance of HVAC equipment; verifying automatic control devices are functioning properly, measuring sound and vibration; and reporting results of activities and procedures as specified in this subsection.

1. Quality Assurance: Provide an independent testing, adjusting, and balancing Agent (hereafter referred to as Agent) certified by either the AABC or NEBB.
2. Submittal Requirements: Provide submittals including a procedural step-by-step testing, adjusting, and balancing strategy. These submittals shall be provided to the Bridge Engineer for review on approved forms certified by the testing, adjusting, and balancing Agent. Testing, adjusting, and balancing reports shall conform to the AABC or NEBB standard form.
3. Coordination: If controls are involved on the project, the balancing Agent shall coordinate work with a control contractor to support and assist with testing, adjusting, and balancing.
4. Testing: The Agent shall perform testing and balancing procedures on each HVAC system according to the procedures contained in AABC national standards or NEBB's "Procedural Standards for Testing, Adjusting, and

Balancing of Environmental Systems." Make any adjustments and/or replacement of items such as pulleys, belts, and dampers as recommended by the Agent at no additional cost or time to the Department. The Agent shall balance the HVAC system to the following tolerances:

a. Supply Fans: 0 to plus 10 percent of the design cfm.

b. Exhaust Fans: 0 to minus 5 percent of the design cfm.

c. Air Outlets and Inlets: Plus 10 percent to minus 10 percent of the design cfm.

d. Water Flow Rates: Plus 5 to minus 5 percent of the design gpm.

5. Reports: The Agent shall submit to the Bridge Engineer a preliminary testing report for review. The report shall be marked and returned to the Agent for corrections (if any). After outstanding comments are resolved, the Agent shall submit to the Bridge Engineer a bound and typewritten final report that he/she has signed, sealed, and dated to certify the accuracy of the report. As a minimum the report shall include the following:

a. Title page that includes the name and address of the Agent; the project number, name, and location; the architect's name and address; the engineer's name and address; the report date, and the signature of Agent who certified the report.

b. A summary of the contents including design versus final performance, notable characteristics of systems, and a description of the system operation sequence if it varies from the plans.

c. List of the instruments used in the testing along with proof of calibration.

d. Pump curves, fan curves, manufacturer's test data.

e. Field quality control test reports prepared by the system and equipment installers, and other information relative to equipment performance.

f. Nomenclature sheets for each item of equipment.

g. Terminal unit data including manufacturer, model, type, size, fittings, motors, air flows, static pressures, etc.

h. Coil data including flow rates (water and air), pressure drop (water and air), etc.

i. Duct traverse reports.

j. Do not include shop drawings.

821.08.33 In Ground Basins for Sewer Lift Stations: Provide precast concrete pipe conforming to ASTM C478 for in ground lift station basins. Grout the bottom and slope to pumps. Basins shall be a minimum of 6 inches thick and shall be capable of handling geotechnical loading. Install an

attached concrete base at the bottom of the basin for both geotechnical loading and to prevent the basin from lifting out of the ground. Excavation and backfill for in ground installations shall be in accordance with Section 802. All piping and conduit into basins shall be grouted and watertight.

1. Access Hatch: Provide a heavy duty aluminum hatch for basin equipment access. The hatch shall have a minimum loading requirement of 300 psf.

2. Vent Pipes: Ventilate basin with a minimum 3 inch schedule 40 galvanized steel pipe. Vents shall have stainless steel insect screens.

821.08.34 Above Ground Basins for Sewer Lift Stations: Fabricate from ASTM A709 Grade 36 galvanized steel, minimum ¼ inch. Basin shall be mounted to withstand all IBC wind loads. All penetrations into basin shall have a watertight flange.

1. Access Hatch: Provide a heavy duty aluminum hatch for basin equipment access. The hatch shall have a minimum loading requirement of 300 psf.

2. Vent Pipes: Ventilate basin with a minimum 3-inch schedule 40 galvanized steel pipe. Vents shall have stainless steel insect screens.

821.08.35 Non-Clog Submersible Pumps for Sewer Lift Stations: Provide a factory-assembled and factory-tested sewage-pump unit with guide-rail supports. The submersible sewage pumps shall consist of the following:

1. Pump Type: Submersible, end-suction, single-stage, close-coupled, overhung-impeller, centrifugal sewage pump as defined in ANSI/HI 1.1-1.2 and ANSI/HI 1.3. Pumps shall be capable of passing 3-inch solids without clogging.

2. Pump Casing: Cast iron, with open inlet, and discharge fittings for connection to guide-rail support.

3. Impeller: Statically and dynamically balanced, stainless steel, non-clog, for solids handling, and keyed and secured to shaft.

4. Pump and Motor Shaft: Stainless steel, with factory-sealed, grease-lubricated ball bearings

5. Moisture-Sensing Probe: Internal moisture sensor and moisture alarm.

6. Motor: Hermetically sealed, capacitor-start type (if required); with built-in overload protection; lifting eye or lug; and three-conductor, waterproof power cable of length required with grounding plug and cable-sealing assembly for connection at pump.

821.08.36 Chopper Type Submersible Pumps for Sewer Lift Stations: Provide a factory-assembled and factory-tested sewage-pump unit

with guide-rail supports. The submersible sewage pumps shall consist of the following:

1. Casing and Back Pull-Out Plate: The pump casing shall be of volute design, spiraling outward to the 125 lb. flanged centerline discharge. Back pull-out design shall incorporate jacking bolts for accurate adjustment of impeller-to-cutter bar clearance. Casing and back plate shall be ductile cast iron with all water passages to be smooth, and free of blowholes and imperfections for good flow characteristics. A pressure tap shall be included on or near the discharge flange. Back plate shall include a replaceable Rockwell C 60 steel cutter adjustable for 0.005-0.015-inch clearance to cut against the rotating impeller pump out vanes for removing fiber and debris. Provide a minimum three mil MDFT epoxy coating.

2. Impeller: The impeller shall be semi-open type with pump out vanes to reduce seal area pressure. Chopping/maceration of materials shall be accomplished by the action of the cupped and sharpened leading edges of the impeller blades moving across the cutter bar at the intake openings, with a maximum set clearance between the impeller and cutter bar of 0.015-0.025 inch cold. Impeller shall be cast alloy steel heat treated to minimum Rockwell C 60 and dynamically balanced. The impeller shall be keyed to the shaft and shall have no axial adjustments and no set screws.

3. Cutter Bar Plate: The cutter bar plate shall be recessed into the pump bowl and shall contain at least two shear bars extending diametrically across the intake opening to within 0.010-0.020-inch of the rotating cutter nut tooth, for the purpose of preventing intake opening blockage and wrapping of debris at the shaft area. Chopper pumps utilizing individually mounted shear bars shall not be acceptable. Cutter bar shall be alloy steel heat-treated to minimum Rockwell C 60.

4. Cutter Nut: The impeller shall be secured to the shaft using a cutter nut, designed to cut stringy materials and prevent binding using a raised, rotating cutter tooth. The cutter nut shall be cast steel heat treated to minimum Rockwell C 60.

5. Upper Cutter: The upper cutter shall be threaded into the back pull-out adapter plate behind the impeller, designed to cut against the pump-out vanes and the impeller hub, reducing and removing stringy materials from the mechanical seal area. Upper cutter shall be cast steel heat treated to minimum Rockwell C 60. The upper cutter teeth are positioned as closely as possible to the center of shaft rotation to minimize cutting torque and nuisance motor tripping. The ratio of upper cutter cutting diameter to shaft diameter in the upper cutter area of the pump shall be 3.0 or less.

6. Shafting: Pump shafting shall be heat-treated alloy steel. The pump shaft shall be directly coupled to the motor shaft, with a bolt and keyway.

7. Submersible Electric Motor: The submersible electric motor shall be UL listed explosion proof for Class 1, Group D, Division 1 hazardous locations, rated at 3 phase, with a 1.15 service factor and Class F insulation. Motor shall be equipped with tandem, independently mounted, mechanical seals in oil bath and with dual moisture sensing probes. The inner and outer seals shall be separated by an oil-filled chamber. The oil chamber shall act as a barrier to trap moisture and provide sufficient time for a planned shutdown. The oil shall also provide lubrication to the internal seal. The inner seal shall be a standard UL listed with carbon rotating faces and ceramic stationary faces. The outer seal construction shall be designed for easy replacement. Outer mechanical seal shall be 316 stainless steel metal bellows type with silicon carbide or tungsten carbide faces. Seal shall be positively driven by set screws. Elastomers shall be two normally closed automatic resetting thermostats connected in series and imbedded in adjoining phases. Motor frame shall be cast iron, and all hardware and shaft shall be stainless steel.

8. Nameplates: Provide stainless steel or aluminum nameplates permanently attached to the pump and drive motor giving the manufacturer's model and serial number, rated capacity, head, speed, and any other pertinent data.

9. Guide Rail System: Provide a guide rail system consisting of two stainless steel guide rails, stainless steel pump guide bracket and discharge elbow with mounting feet and 125 lb flanges, an upper guide rail mounting bracket and intermediate guide brackets every 10 feet.

10. Spark Proof Guide Rail System: Provide a non-sparking guide rail system consisting of two stainless steel guide rails, cast aluminum bronze pump guide bracket, cast ductile iron discharge elbow with mounting feet and 125 lb flanges, upper guide rail mounting bracket, and intermediate guide brackets every 10 feet. System design shall prevent spark ignition of explosive gases during pump installation and removal.

11. Moisture-Sensing Probe: Provide an internal moisture sensor and moisture alarm.

821.08.37 Control Panels for Sewer Lift Stations: Provide NEMA 4X stainless steel panels with the following features:

1. Alternate between pumps for each run cycle.
2. Audible and visual high water alarms.
3. Mercury float type switch with mounting rod and electric cables.

4. External indicator lights for each pump on/off status and each pump seal failure.

5. All components, wiring, and conduit shall be in accordance with Section 822, Electrical Systems.

821.08.38 Valves for Sewer Lift Stations: Each pump and motor assembly shall have a shut-off valve and a swing check valve located above the high water alarm. Shut-off and swing check valves shall be as follows:

1. Shut-off Valves: Provide cast iron shut-off valves that conform to ASME B16.1. Valves shall be line size, Class 125, non-rising stem, and an epoxy coating.

2. Swing Check Valves: Provide cast iron swing check valves that conform to ASME B16.1. Valves shall be line size, Class 250, horizontal swing type, rated for non-clog service, and an epoxy coating.

821.08.39 Accessories for Sewer Lift Stations:

1. Lift Assembly: Provide a marine grade stainless steel lift assembly for each pump and motor.

2. Conduit Seals: Provide conduit seals on every conduit leaving the lift station basin. Seals shall be airtight, line sized, and code compliant.

821.08.40 In-Ground Sewage Treatment Facilities: Excavation and backfill for in-ground installations shall be in accordance with Section 802. Foundations shall be in accordance with Section 823.07.1, Foundations. Sewage treatment facilities shall consist of the following items:

1. General Requirements: The extended aeration sewage treatment plant shall provide primary and secondary treatment of wastewater flow.

Primary treatment shall be accomplished in the aeration chamber of the facility. All incoming wastewater shall enter and be retained in the aeration chamber for 24 hours. Air shall be introduced along one wall near the bottom to produce a mixing and rolling action in the tank.

Secondary treatment of the wastewater shall be accomplished in a clarification chamber. Mixed liquids shall flow from the aeration chamber into the clarification chamber by hydraulic displacement. The effective holding capacity of the clarifier shall be of sufficient volume to provide in excess of 4 hour retention of the daily flow.

Capability of a plant shall be certified by an independent testing laboratory. The manufacturer shall make certified data available to the regulatory agency, customer, consultant, and contractor as required.

Principal items of equipment supplied with the system shall include concrete aeration and clarification tank(s), air distribution system, air diffused system, airlift sludge return pumping system, airlift surface skimming system,

galvanized grating with bolted locking device for all tank openings, rotary blowers, motors, electrical controls, mechanical equipment housing, effluent weir trough, and all necessary internal piping and mechanical equipment. Reinforce the sewage treatment plant structure to withstand normal pressures from external soil and internal hydrostatic loads.

2. Aeration Chamber(s): Construct the clarifier of properly reinforced 5,000 psi, 28 day compressive strength concrete. Each casting shall be a monolithic unit with all four walls incorporated into the tank section. The aeration chamber(s) shall provide 24 hour retention of daily waste water flow. The chamber shall be of sufficient size to provide a minimum of 80 cubic feet of tank capacity per pound of applied BOD. Install concrete fillets in the bottom of the chamber parallel to the treatment flow to ensure uniform tank roll and prevent deposition of solids. Overall design of the chamber shall be such that effective mixing shall be maintained to provide optimum treatment.

3. Air Distribution Piping: Provide galvanized steel Schedule 40 piping and galvanized malleable iron pipe fittings throughout the air distribution system. Provide individual galvanized pipe unions, dresser couplings, and flexible couplings with stainless steel clamps in the air distribution piping as required to allow individual adjustment of each separate element within the system.

Provide primary air distribution through a galvanized air header. The air header shall have individual drop pipes connected to the header assembly for air supply to individual diffused assemblies.

Provide each drop pipe with an air brass bodied adjustment valve to control air flow individually to each diffused assembly. In addition, provide a brass bodied quick release coupling or union for each pipe diffused assembly downstream from the air adjustment.

4. Air Diffusion System: Provide diffusers parallel to the treatment flow in the aeration chamber. Install each diffuser assembly no more than 12 inches off the floor of the chamber and no more than 12 inches away from the chamber sidewall. Construct diffusers of Schedule 40 galvanized steel and design to ensure uniform mixing within the aeration chamber. Fine air bubble distribution effected by the diffusers shall be adequate to provide all oxygen necessary for the aerobic digestion process while maintaining an acceptable dissolved oxygen level in the final plant effluent.

5. Clarification Chamber: Provide a final clarification chamber for secondary treatment of the daily flow. Construct the clarifier of properly reinforced 5,000 psi, 28-day compression strength concrete.

Each casting in the clarifier shall be a monolithic unit with all four walls

incorporated into the tank section. Provide an inlet baffle zone at the flow inlet to the clarification chamber. The area contained behind the baffle shall allow adequate capacity and retention for surfacing of all buoyant material entering the clarifier. Settled sludge shall be returned to the aeration chamber by continuous airlift pumping.

6. Airlift Sludge Return: Provide an airlift sludge return pump for the hopper(s) in the clarification chamber. Air shall be supplied to the airlift(s) through a secondary air distribution system connected to the main air header of the treatment plant. Install individual air manifold piping for each airlift and equip with a brass bodied valve for fine adjustment or shut-off.

Construct the airlift(s) proper of Schedule 40 galvanized steel pipe and fittings. Install a removable clean-out plug at the top of the vertical airlift pipe. Arrange piping so that returned sludge is deposited in the aeration chamber at a point which prevents short-circuiting and with positive visible return. The airlift pump(s) shall be designed and manufactured of adequate size pipe and with sufficient air supply to provide a pumping rate in excess of the total daily flow. Provide air required to achieve this in excess of the necessary air for aeration, mixing, and treatment. Equip the airlift pump inlet(s) to achieve this. Provide stainless steel brackets to position the inlet correctly at the base of the hopper.

7. Airlift Surface Skimmer: Provide an airlift surface skimming system in the settling zone of the clarification chamber(s).

Construct the airlift skimmer(s) of Schedule 40 galvanized pipe and fittings. Equip the skimmer inlet(s) with an adjustable cone. Provide a removable galvanized cleanout plug at the top of the skimmer airlift pipe where it joins the horizontal discharge line. The discharge line shall run on top of the plant and return back to the aeration chamber for final discharge. Connect the skimmer air supply to the main air header of the treatment plant.

8. Disinfection: Disinfection of treatment plant effluent shall be done by a chlorine contact chamber. The chlorine contact chamber shall have a retention time of 15 minutes at peak hourly flow.

9. Mechanical Equipment: Provide air required for the treatment process and operation of airlifts in the clarifier by two rotary positive displacement blowers. Provide each blower unit with inlet air filter silencer(s), discharge flexible coupling connector to air header assembly, and a bronze bodied check valve on the discharge piping. Each blower shall be capable of providing all air capacity for the sewage treatment facility. Blower connection to the drive motor(s) shall be conventional v-belts power transmission drive assembly.

Motors shall be severe-duty TENV electric motor(s) used to drive the blower(s). When in operation at the rated horsepower, the motor(s) shall reach maximum speed that shall exceed 97 percent of the reference synchronous speed. The motor(s) for the facility shall be designed and rated for continuous duty applications and shall not overload or exceed motor nameplate ratings when operating as outlined for this facility.

10. Control Panel: Provide NEMA 4X stainless steel panels with the following features:

a. Alternate between blowers based on the time clock.

b. Audible and visual alarm for blower failure.

c. External indicator lights for each blower on/off status.

d. All components, wiring, and conduit shall be in accordance with Section 822, Electrical Systems.

821.08.41 Above Ground Sewage Treatment Plants: Provide a U.S. Coast Guard Certified Type II Marine Sanitation Device (MSD). Equip the aeration-type mechanical sewage treatment system with clarification and chlorination chambers, valves, blowers, and chemical injection pump. Sewer and vent piping shall be Schedule 40 ductile iron with corrosion resistant coating. Exposed PVC piping will not be allowed. The sewage treatment plant shall contain the following:

1. Construction: Marine-grade aluminum with corrosion resistant finish.
2. Fasteners: Marine-grade stainless steel.
3. Finish: Ceramic-filled epoxy coating.
4. Capacity: Minimum of 50 gallon per day.
5. Control Panel: NEMA 4X stainless steel enclosure meeting the following requirements:

a. Alternate between blowers based on the time clock.

b. Audible and visual alarm for blower failure.

c. External indicator light for blower on/off status.

d. All components, wiring, and conduit shall be in accordance with Section 822, Electrical Systems.

821.08.42 Fencing Around Sewage System: Provide a 6 feet high fence around all sewage treatment plants, lift stations, and accessories. Fence shall be as detailed on the plans. If not detailed on the plans, fence shall be in accordance with Section 705 and the Department's standard chain link fence details. Fence shall have a 3 feet wide lockable gate or a lockable double gate if access for service vehicles is needed.

821.08.43 Equipment Nameplates: Where shown on the plans or as required by the Project Engineer, all mechanical equipment shall have a

nameplate as shown on Figure 821-1. Refer to plan sheets and details for nameplate text and location. Nameplates shall be fabricated from 1/16-inch thick phenol plate engraved stock, have satin black outer layer, have white inner layer, and have 45 degree beveled edges. Nameplate wording shall have 1/4-inch or 1/2-inch size block-style letters. Nameplates shall have four 1/8-inch diameter pre-drilled holes, one at each corner, for mounting nameplate. Nameplates shall be fastened to equipment with #6-32 marine duty stainless steel self-tapping machine screws having 30,000 psi yield strength. Nameplates shall be level after installation. Any variation in nameplate size shall be submitted to the Bridge Engineer for review.

Figure 821-1, Nameplate Details

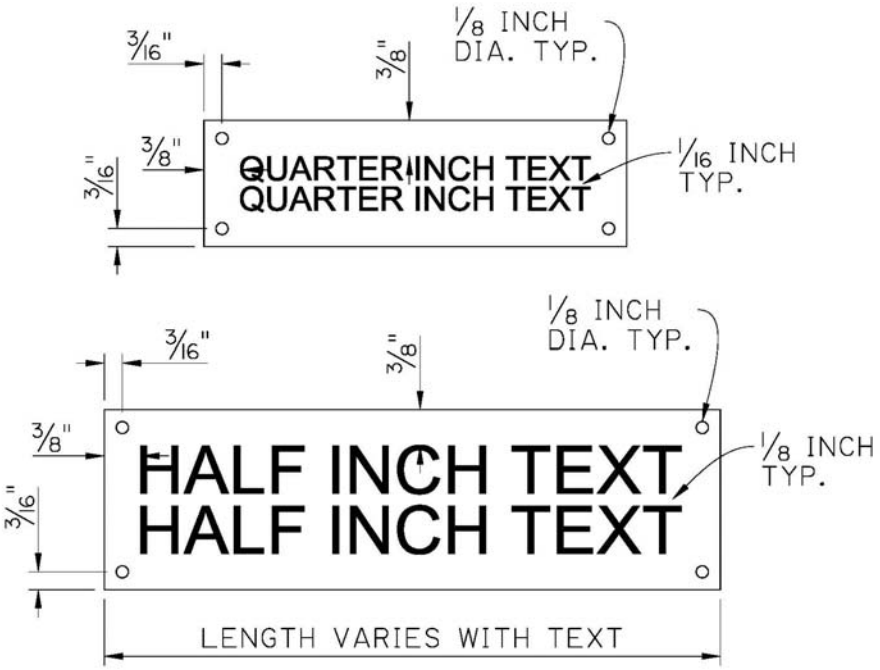

821.09 MEASUREMENT. No measurement of materials will be made; material quantities shown on the plans are for informational purposes only.

Preparing and submitting the Mechanical Operation and Maintenance Manual will not be measured for payment. The cost is to be included in the mechanical, electrical, and facility items contained in the plans.

821.10 PAYMENT. Payment for the completed and accepted items will be made at the contract lump sum price, which includes furnishing, shop and field fabricating, erecting, cleaning and painting, galvanizing, or other coating materials; furnishing all required labor, equipment and materials, tools, staging, falsework, forms, welding, bolts, and other hardware; and the performance of all work necessary to complete the item.

Cost of preparing and submitting the Mechanical Operation and Maintenance Manual shall be included in the pay items of Sections of 821, 822, and 823. The Department will retain 5 percent of the bid price of all mechanical, electrical, and facility items (821, 822, and 823 items) until the manual has been reviewed and accepted, and final paper reproductions have been received by the Department.

When changes in the work are ordered by the Project Engineer, which vary from the contract, compensation will be in accordance with 109.04.

Payment will be made under:

Item No.	Pay Item	Pay Unit
821-01	Swing Span Bridge Mechanical System (Type)	Lump Sum
821-02	Vertical Lift Bridge Mechanical System (Type)	Lump Sum
821-03	Bascule Span Bridge Mechanical System (Type)	Lump Sum
821-04	Pontoon Span Bridge Mechanical System (Type)	Lump Sum
821-05	Movable Barriers (Type)	Lump Sum
821-06	Facility Mechanical Systems (Type)	Lump Sum

Section 822
Electrical Systems

822.01 DESCRIPTION. Furnish equipment, materials, tools, and labor to purchase/fabricate, shop test, transport, install/erect, wire, align/adjust, paint, field test, and set-up electrical items/systems as specified.

822.02 ACRONYMS AND ABBREVIATIONS.

IES	Illuminating Engineering Society
NEC	National Electrical Code
NESC	National Electrical Safety Code
NFPA	National Fire Protection Association
UL	Underwriters Laboratories, Inc.

See 101.02, 801.02, and 820.02 for additional acronyms.

822.03 DEFINITIONS.

System Compatibility. System compatibility covers the overall functionality, appropriateness, and integration with all components used to make up that system and interfacing with adjacent systems or components, whether electrical or non-electrical.

See 101.03, 801.03, and 820.03 for additional definitions.

822.04 EQUIPMENT AND MATERIALS. Furnish equipment and materials suitable for the intended use with all necessary hardware and components.

References to a specific manufacturer's name and/or catalog number are intended to denote the quality and function of equipment or material and not to specifically exclude other products. When specified model or catalog numbers conflict with descriptive specifications, plans, or system compatibility, the descriptive specifications, plans, or system compatibility shall govern.

Except for those products designated as fabricated or those that are no longer produced, all specified products shall be manufactured by companies that regularly engage in the production of the specified products.

The products specified shall be specifically designed, tested, and manufactured for the purpose for which they will be used. Modification of equipment for other than design purposes will be permitted only when no currently manufactured products meet the specifications. Such modifications

shall be submitted for review to the Bridge Engineer and the manufacturer prior to purchasing equipment.

Consider all manufactured items identified on the plans by a manufacturer and a part number to be followed by the phrase "or item of equal or better quality and function."

All manufactured parts/equipment and all material for fabricated parts shall be new. Like equipment and materials shall be made by the same manufacturer.

The plans, item descriptions, and specifications do not necessarily include or define everything necessary for a complete and operational item. When required, provide any modifications, fabrications, extra hardware, and equipment necessary for the satisfactory installation and operation of the system to coordinate with other items or conditions. The cost of such provisions shall be included in the bid price.

Materials shall comply with the plans and specifications and the following sections and subsections:

Embankment	203
Drilled Shafts	803.02
Piles	804.02
Structural Concrete	805.02
Deformed Reinforcing Steel	806.02
Structural Metals	807.02
Steel Grid Flooring	808.02
Welding	809
Painting and Protective Coatings	811.02
Treated Timber	812.02
Mechanical Systems	821.03
Portland Cement Concrete	901.02
Mortar	1001.03
Reinforcing Steel	1009
Metals	1013
Stainless Steel Bolts	1013.08.3
Timber	1014
Epoxy Resin System	1017
Electrical Conduit and Conductors	1018.11

822.05 GENERAL REQUIREMENTS. By bidding on the project, the bidder affirms to having necessary knowledge and experience, to

understanding the intent of the contract, and to the obligation of providing complete, safe, and functioning electrical systems in accordance with the intent of the contract.

1. Provide personnel knowledgeable and experienced in the installation, wiring, assembly, adjustment, fabrication, and testing of the type of electrical systems specified in the contract. Although the contract documents are of sufficient detail and quality to convey the intent of the design to an experienced contractor, they do not necessarily depict every detail or specify every ancillary item required for the electrical systems to be properly installed, wired, assembled, aligned, fabricated, transported, adjusted, tested, painted, and functioning in accordance with the intent of the contract. Some drawings are diagrammatic and do not show the exact location and size of equipment. Prevent interference and conflicts and ensure system compatibility; coordinate the work as required and in accordance to the following:

2. Comply with the applicable requirements of the NEC, NFPA 70E, and UL, etc., except where superseded by applicable laws.

3. Check mounting space, equipment dimensions, and installation requirements before ordering equipment.

4. Establish the electrical circuit requirements of all equipment to be served before ordering material.

5. Where circuits are to serve specific appliances, equipment, or feeders, verify the electrical requirements and the exact location of connections before installing the service to the equipment.

If any portion of the work that is not clearly defined in the contract, or if the contract has a conflict, or if the contract appears to violate any governing laws, codes, or regulations, submit a written Request For Information (RFI) to the Project Engineer for clarification prior to proceeding with the work. Any such work performed without a completed RFI is at the contractor's risk. RFI's shall be submitted on the Department's official RFI form for review. The form can be found on the Department's website.

Use best industry practices at all times during fabrication, assembly/alignment, installation, wiring, and testing of all electrical systems.

822.06 SUBMITTALS. Prepare and submit electrical items/system submittals shown on the plans to the Bridge Engineer for review or record in accordance with 105.02.2, 801.05, 820.06, and the following:

Manufactured items/materials shall be installed in accordance with the manufacturer's recommendations and instructions unless otherwise noted on the plans. Prior to installation of manufactured items at the project site,

provide the manufacturer's written installation recommendations and instructions to the Department's Inspector/Project Engineer as requested for reference during installation.

822.06.1 Shop Drawings: Prepare and submit shop drawings for fabricated items.

For bidding purposes, allow a review period of 14 calendar days per submittal for submittals consisting of 15 or less cut sheets. For submittals containing more than 15 cut sheets, allow a review period of 14 calendar days per 15 sheets submitted rounded up (e.g. ,16 to 30 sheets equals a 28 calendar day review). Review periods for separate submittals are not concurrent.

Submit a shop drawing submittal schedule to the Bridge Engineer prior to the preconstruction conference.

For drawings returned for correction, place a cloud shaped outline around each change and note changes in the revision block. Resubmit to the Bridge Engineer for review. Any submittal with unmarked or unnoted changes will be returned without review. This process will repeat until the drawing is accepted.

822.06.1.1 Detail Sheets: Submit detail sheets for each fabricated electrical item. Detail sheets shall show all views, dimensions, tolerances, fits, finishes, welds, materials, etc. required to fabricate an individual item. Include estimated weight (mass) for each fabricated item.

822.06.1.2 Assembly Sheets: Submit assembly sheets for electrical assemblies. Show how groups of electrical parts are to be assembled, and where electrical assemblies are located on the project. Show manufactured items, their pertinent dimensions, and estimated weights.

Submit assembly sheets, related detail sheets, and related cut sheets for manufactured items at the same time. Assembly sheets will not be accepted until all items that make up the assembly have been accepted.

822.06.2 Manufacturer Information Sheets (Cut Sheets): Prepare and submit cut sheets for all manufactured items. Cut sheets must be of good quality and easily readable. Poor quality can be reason for rejection.

Stamp each sheet of each submittal with the project name, project number, parish name, and contractor's name. Include the manufacturer's name if not already shown on the cut sheet and the electrical item number assigned for the item on the plans.

Pertinent ratings, sizes, features, or any other data specified on the plans must be indicated on the cut sheet with an arrow or other such mark. Do not use highlight markers.

Cross out all items on a cut sheet that are not specifically being submitted.

Include the manufactured item's warranty information if the warranty extends beyond the contractor's guarantee period. Always include documentation for extended warranties that were required to be purchased for the contract.

822.06.2.1 Cut Sheet Submittal Procedure: Submit cut sheets electronically to the Bridge Engineer for review. The electronic file shall be a single, color, Portable Document Format (PDF) file.

For bidding purposes, allow a review period of 14 calendar days per submittal for submittals consisting of 25 or less cut sheets. For submittals containing more than 25 cut sheets, allow a review period of 14 calendar days per 25 sheets submitted rounded up (e.g., 26 to 50 sheets equals a 28 calendar day review). Review periods for separate submittals are not concurrent.

After review, rejected cut sheets will be stamped "Returned for Correction", will be initialed and dated by the reviewer, will have comments marked in red, and will be returned electronically. Correct submittal and resubmit electronically to the Bridge Engineer for review. This process will repeat until the Department has no comments. Submittals will then be stamped "Accepted in accordance with LSSRB 105.02," initialed and dated by the reviewer, and distributed electronically by the Department.

822.06.3 Color and Material Samples: Prepare and submit color and material samples for review as indicated in the contract.

822.06.4 Equipment Settings: Prepare and submit sheets that list electrical items that contain electrical set points or configurations. Clearly list the set point values and any other adjustable configurations associated with electrical items. These sheets should not be prepared until electrical items have been installed and tested.

822.06.5 Electrical Record Drawings: Electrical Record Drawings shall become part of the final estimate package and submitted for archiving. They shall consist of the following:

1. Original, full scale, electrical contract plan sheets and change order sheets. These sheets shall have the Project Engineer's signature certifying that the drawings are As-Built.
2. All reviewed and stamped "Electrical Shop Drawings."
3. Any electrical contract plan sheets (full scale) that have been marked to indicate construction changes ("As Built" sheets). These sheets shall have the Project Engineer's signature certifying that the changes are accurate.

822.06.6 Electrical Operation & Maintenance Manual: Prepare and submit an Electrical Operation & Maintenance Manual. Comply with Sections 801, Subsection 820.06.2 and the following:

Cost of preparing and submitting the Electrical Operation and Maintenance Manual shall be included in the pay items of Sections 821, 822, and 823. The Department will retain 5 percent of the bid price of all mechanical, electrical, and facility items (821, 822, and 823 items) until the manual has been reviewed and accepted, and final paper reproductions have been received by the Department.

Sheets included in the manual must be of good print quality and easily readable. Poor quality can be reason for rejection. Sheets with color must be scanned/printed in color.

Drawings reduced for the manual shall be a true 50 percent reduction and maintain scalability.

As a minimum, the *Electrical Operation and Maintenance Manual* will contain the following:

1. A title sheet showing "Louisiana Department of Transportation and Development," *"Electrical Operation & Maintenance Manual"*, the project name, project number, parish name, the year the project was completed, and the name of the General and Electrical Subcontractors and contact information for each.

2. A "Sequence of Operations" section that contains sheets with numeric lists of steps required for normal, partial, and fault clearing operation of the electrical and electro/mechanical systems. Material for this section will be provided by the Department.

3. A "Shop Drawings" section that contains all electrical Shop Drawing sheets. Generate from the original PDF files reviewed by the Department and stamped with the "Accepted in accordance with LSSRB 105.02" stamp, the reviewer's initials, and the date of the review. Format for printing 11 inch x 17 inch.

4. A "Cut Sheets" section that contains all electrical cut sheets. Generate from the original PDF files reviewed by the Department and stamped with the "Accepted in accordance with LSSRB 105.02" stamp, the reviewer's initials, and the date of the review.

5. An "Equipment Settings" section that contains all of the electrical equipment settings sheets. Generate from the PDF files that were reviewed by the Department and stamped with the "Accepted in accordance with LSSRB 105.02" stamp, the reviewer's initials, and the date of the review.

6. An “As Built” section that contains all electrical “As Built” sheets containing the Project Engineer’s signature. Scan at high quality from the full size original and format for printing 11 inch x 17 inch.

7. A “Warranties” section that contains warranty information for manufactured items. Generate from the original PDF files reviewed by the Department and stamped with the “Accepted in accordance with LSSRB 105.02” stamp, the reviewer’s initials, and the date of the review. Include the contractor’s warranty as specified in section 104.05.

8. Any other information that is pertinent to the operation and maintenance of the electrical system.

822.06.6.1 Electrical Operation & Maintenance Manual Submittal Procedure: Submit the Electrical Operation & Maintenance Manual electronically to the Bridge Engineer for review. The electronic file shall be a single, color, Portable Document Format (PDF) file, and shall be organized and formatted to present itself as a finished *Electrical Operation & Maintenance Manual*. For bidding purposes, allow a review period of 24 calendar days.

The entire *Electrical Operation & Maintenance Manual* will be considered one item. Only the title sheet shall be stamped “Returned for Correction” or “Accepted in accordance with LSSRB 105.02.”

If the *Electrical Operation & Maintenance Manual* is rejected after review, the title sheet will be stamped “Returned for Correction”, initialed and dated by the reviewer, will have comments marked in red, and returned electronically. Correct submittal and resubmit electronically to the Bridge Engineer for review. This process will repeat until the Department has no comments. For bidding purposes, allow a review period of 24 calendar days for each iteration. The title sheet will then be stamped “Accepted in accordance with LSSRB 105.02,” initialed and dated by the reviewer, and distributed electronically by Bridge Design.

822.06.6.2 Electrical Operation & Maintenance Manual Hard Copies: After the electronic submittal process has been completed, provide two color hard copies of the manual to the Bridge Engineer for review.

Print hard copy sheets from the original reviewed and accepted PDF file. All reviewed sheets shall show the “Accepted in accordance with LSSRB 105.02” stamp, the initials of the reviewer, and the date reviewed.

Provide each manual with a white, premium, heavy duty, 3 D ring binder with title sleeve. Binders shall be appropriately sized to hold enclosed material, but not larger than 3 inches. Use multiple binders if necessary.

Provide an 8-1/2-inch x 11-inch tab index divider with labeled tab to delineate sections.

822.07 SHOP REQUIREMENTS. Fabrication of parts shall conform to applicable fabrication ANSI, ISO, ASTM, ASME, SAE, etc. Standards. Conform to Section 821, "Mechanical Systems."

822.08 FASTENERS.

822.08.1 Stainless Steel Bolts, Nuts, and Washers

Unless otherwise specified on the plans, use and install stainless steel fasteners for electrical parts/equipment in accordance with 821.07.8.

822.09 SYSTEMS TESTING. Furnish all testing equipment and conduct the tests required by the contract. Provide a copy of the test results to the Bridge Engineer for review.

822.09.1 Performance Tests: Conduct performance testing of equipment for a minimum period of two weeks before final acceptance. Allow for normal operation of the equipment during the performance testing period. When normal operation proves insufficient to adequately test the equipment, artificial cycling or continuous "on" periods will be required. Correct any defective equipment, materials, and workmanship.

822.09.2 Receptacle Tests: After completion of the electrical system, test each receptacle for proper polarity and continuity of the ground.

822.09.3 Special Tests: Conduct special tests as required by the Bridge Engineer or Project Engineer when electrical equipment or systems are suspected of improper operation, or when additional data is necessary to determine proper operation.

822.09.4 Insulation Tests: Conduct insulation resistance tests on direct buried conductors and other AWG No. 10 and larger conductors. Perform tests after installing the conductors and before connecting equipment that may be damaged by the tests. When measured with a 1000 volt D.C. insulation tester, readings below 50 megohms, will be considered defective.

822.10 ELECTRICAL SERVICE. Make arrangements with the power company for temporary and permanent electrical service; verify the exact location and points of attachment before installation.

822.10.1 Temporary Service: Temporary electrical service including power usage and installation shall be included in the price bid for the item.

822.10.2 Permanent Service: The Department will pay the power

company for line extensions if such extensions are not the result of contractor errors or failure to verify or coordinate with the power company. Power usage during construction and testing shall be included in the price bid for the item.

822.11 MEASUREMENT. Preparing and submitting the Electrical and Operation Manual will not be measured for payment. The cost is to be included in the electrical items contained in the plans.

Preparing and submitting the Electrical Operation and Maintenance Manual will not be measured for payment. The cost is to be included in the mechanical, electrical, and facility items contained in the plans.

822.11.1 Trenching and Backfilling: Trenching and backfilling will be measured by the linear foot of trench excavated and backfilled, which will include excavation, backfilling, and any required compaction.

822.11.2 Conduit with Conductors: Conduit with conductors will be measured by the linear foot of conduit, which will include furnishing and installing conduit, conductors, clamps, fittings, flexible metal conduit, and miscellaneous hardware required for conduit installation.

822.11.3 Conductors: Conductors in existing conduits will be measured by the linear foot of conductors furnished and installed, which will include connectors, terminations, and wire markers.

822.11.4 Jacked or Bored Casing: Jacked or bored casings will be measured by the linear foot of casing furnished and installed, which will include the casing, fittings, and required excavation and backfill.

822.11.5 Light Pole: Light poles will be measured per each pole furnished and installed which will include the pole, decals, ownership plate, wiring and connections to circuit conductors, base assembly, grout, and oxide-inhibiting compound. Measurement for ground mounted poles will also include the concrete foundation, concrete apron, underground junction boxes in apron, anchor bolts, reinforcing steel, conduits in foundation, ground rod, ground wires, ground clamp, excavation, backfill, and disposal of excess excavated material.

822.11.6 High Mast Poles: High mast poles will be measured per each pole furnished and installed, which will include the pole, luminaire ring, lowering assembly, drive assembly, grounding, wiring, electrical connections, fuses, mounting hardware, and grout. Measurement for ground mounted poles will also include the concrete foundation, concrete apron, underground junction box in apron, anchor bolts, reinforcing steel, conduit in foundation, ground rod, excavation, backfilling, disposal of excess excavated material, and all hardware and appurtenances required for a complete installation.

822.11.7 Luminaire: Luminaires will be measured per each which will include the luminaire, ballast, lamp, fuse, lightning arrestor, mounting, connections, and hardware.

822.11.8 Electrical Service Points: Electrical service points will be measured per each, which will include the pole, controller assembly, footing, anchor bolts, ground rod, conduits in footing, rigid conduit and conductors on utility company pole connections, hardware, and all equipment as shown on the plans.

822.11.9 Electrical System: Electrical systems will be measured on a lump sum basis, which will include furnishing and installing all equipment and apparatus, and performing all work required for a complete and operational electrical system.

822.11.10 Fabricated Light Pole Supports: Fabricated light pole supports will be measured per each, which will include fabrication and installation of the support, concrete anchors, anchor bolts and nuts, and grout.

822.11.11 Removal and Disposal of Electrical Equipment: The removal of existing electrical equipment as indicated on the plans will be measured as a lump sum, which will include the disconnecting of wiring at the source, the removal of exposed conduit and wiring, and the removal of associated electrical equipment. Measurement for outside systems will include the removal of structure mounted conduit, wire clamps, junction boxes, and underpass luminaires; the removal of service poles and equipment; the removal of conduit risers and the demolition of underground manholes to 24 inches below grade; the removal of underground junction boxes; the backfilling to grade of all voids; and the disposal of material and equipment declared not salvageable. Disposal of such non-salvageable material and equipment shall be in accordance with 202.05 as appropriate.

822.11.12 Removal and Storage of Light Poles: Removal of existing light poles and arms or lowering device will be measured per each pole, which will include the disconnection of wiring at the source; the removal and transporting of the pole and arms or lowering devices to the specified District compound; the furnishing of 6 inch x 6 inch treated timbers as spacers, and the stacking of the equipment as directed.

822.11.13 Removal and Disposal of Light Pole Foundations: Removal of existing light pole foundations will be measured per each foundation, which will include the removal and disposal of the complete concrete foundation and apron; the backfilling to grade of all voids; and the removal or abandonment of underground wiring to the pole.

822.11.14 Removal and Disposal of Luminaires: Removal and disposal of existing luminaires will be measured per each luminaire, which will include removal and the disposal of the luminaire and lamp. Disposal shall be in accordance with 202.05 as appropriate.

822.11.15 Relocate Light Poles: Relocation of existing light poles will be measured per each pole, which will include disconnection of the wiring at the source; the removal or abandonment of underground wiring to the pole; the removal and storage of existing pole and luminaire; the complete removal and disposal of existing foundation and apron; the backfilling of

existing foundation void; the re-installation of the existing pole and luminaire; the construction of a new foundation with apron and junction box; the installation of new ground rod, fused connectors, and pole wiring.

822.11.16 Underground Junction Box: Underground junction boxes will be measured per each box installed, and will include the box, cover, concrete pad, rigid steel conduits, ground rod bonding, splices, and all other materials and equipment required for a complete installation.

822.11.17 Structure Junction Box: Structure junction boxes will be measured per each box installed, and will include the box, cover, mounting hardware, shims, terminal blocks, fittings, bonding, and any material and equipment required for a complete installation.

822.11.18 Service Pole: Service poles will be measured per each, and will include the pole conduit and conductors on pole, fittings, conduit clamps, ground rod, hardware, and all equipment as shown on the plans.

822.11.19 Modular Breakaway Cable System: Modular breakaway electrical cable systems for low mast light poles will be measured per each and will include all materials, labor, equipment, and tools necessary to furnish and install a complete system in accordance with the plans and specifications.

822.11.20 Disconnect: Disconnects will be measured per each.

822.11.21 Duct Markers: Duct markers will be measured per each.

822.11.22 Underground Marker Tape: Marker tape will be measured per linear foot.

822.12 PAYMENT. Payment for electrical work will be made at the contract unit prices and will include all materials, labor, equipment, tools necessary to furnish, construct, and/or install this item in accordance with the plans and specifications.

The concrete in foundations for light poles, high mast poles, and other electrical equipment will be identified by lots and shall be subject to pay adjustments in accordance with Table 901-4 and note 1 therein. Size, sampling, and testing of each concrete lot shall be in accordance with the Materials Sampling Manual.

Cost of preparing and submitting the Electrical Operation and Maintenance Manual shall be included in the pay items of Sections 821, 822, and 823. The Department will retain 5 percent of the bid price of all mechanical, electrical, and facility items (821, 822, and 823 items) until the manual has been reviewed and accepted, and final paper reproductions have been received by the Department.

Payment will be made under:

Item No.	Pay Item	Pay Unit
822-01	Trenching and Backfilling	Linear Foot
822-02	Conduit with Conductors (Type)	Linear Foot
822-03	Conductors	Linear Foot
822-04	Jacked or Bored Casing (Type)	Linear Foot
822-05	Light Pole (Type)	Each
822-06	High Mast Pole (Type)	Each
822-07	Luminaire (Type)	Each
822-08	Electrical Service Point (Type)	Each
822-09	Electrical System	Lump Sum
822-10	Fabricated Light Pole Support	Each
822-11	Removal and Disposal of Electrical Equipment	Lump Sum
822-12	Removal and Storage of Light Pole (Type)	Each
822-13	Removal and Disposal of Light Pole Foundation (Type)	Each
822-14	Removal and Disposal of Luminaire	Each
822-15	Relocate Light Poles (Type)	Each
822-16	Underground Junction Box (Type)	Each
822-17	Structure Junction Box (Type)	Each
822-18	Service Pole	Each
822-19	Modular Breakaway Cable System	Each
822-20	Disconnect (Type)	Each
822-21	Duct Marker (Concrete)	Each
822-22	Underground Marker Tape (Type)	Linear Foot

Section 823
Facilities

823.01 DESCRIPTION. This section sets forth general architectural requirements for the construction of new Department facilities and/or renovation of existing Department facilities.

823.02 ACRONYMS AND ABBREVIATIONS. See 821.02 for acronyms and abbreviations.

823.03 DEFINITIONS. See 821.03 for definitions pertaining to this section.

823.04 MATERIALS. All material for fabricated items shall be new, and all manufactured items shall be new.

Embankment	203
Fences	705
Jacked or Bored Pipe	728
Drilled Shafts	803
Piles	804
Structural Concrete	805
Reinforcement	806
Structural Metals	807
Steel Grid Flooring	808
Welding	809
Painting and Protective Coatings	811
Treated Timber	812
Deck Drainage Systems	816
Mechanical Systems	821
Electrical Systems	822
Portland Cement Concrete	901
Mortar Cement	1001
Reinforcing Steel, Strand, and Wire Rope	1009
Metals	1013
Epoxy Resin System	1017

823.05 GENERAL REQUIREMENTS. See 821.05 for General Requirements pertaining to this section.

823.06 SUBMITTALS. See 821.06 for Submittal specifications.

823.07 FACILITY ARCHITECTURAL SPECIFICATIONS.

823.07.1 Foundations: Slab foundations shall apply to any structures such as buildings, sewer treatment plants, lift stations, HVAC equipment pads, etc. Operator's house first floor slabs shall be as specified in the structural plan sheets.

1. Concrete**:** All concrete for architectural and mechanical foundations shall be Class A in accordance with Section 901.

2. Vapor Retarder: All foundations for conditioned and/or enclosed structures shall receive a continuous ASTM E1745, Class A, sheet vapor retarder. Include the manufacturer's recommended adhesive or pressure-sensitive tape.

3. Reinforcing Steel: All deformed reinforcing steel for architectural and mechanical foundations shall comply with Section 806.

823.07.2 Concrete Masonry Unit (CMU) Blocks: Concrete masonry unit blocks shall contain an integral water repellent. Blocks shall be textured. Blocks and mortar color shall match. The exterior of the blocks and mortar shall be sealed in accordance with the block manufacturer's recommendations. Custom colors for both blocks and mortar shall be provided at no additional cost to the Department.

1. CMUs: Comply with ASTM C90. CMUs shall contain integral liquid polymeric water repellant. Admixture shall not reduce flexural bond strength for exposed units.

a. Unit Compressive Strength: Provide units with minimum average net-area compressive strength of 3,950 psi. Density Classification shall be lightweight as specified under ASTM C90.

b. Pattern and Texture: Standard pattern, split-face finish. Match Design Engineer's samples. The manufacturer's full range of colors shall be available at no additional cost.

2. Reinforcement:

a. Steel Reinforcing Bars: Hot-dip galvanized, ASTM A615 or ASTM A996, Grade 60.

b. Masonry Joint Reinforcement, General: ASTM A951.

c. Wire Size for Side Rods: 0.187-inch diameter.

d. Wire Size for Cross Rods: 0.187-inch diameter.

e. Wire Size for Veneer Ties: 0.187-inch diameter.

f. Spacing of Cross Rods, Tabs, and Cross Ties: Not more than 16 inches on centers.

g. Minimum Rod Lengths: Provide in lengths of not less than 10 feet.

3. Embedded Flashing Materials: Provide metal flashing complying with SMACNA's "Architectural Sheet Metal Manual" and as follows:

a. Metal Drip Edge: Fabricate from stainless steel. Extend at least 3 inches into wall and 1/2 inch out from wall, with outer edge bent down 30 degrees and hemmed.

b. Metal Sealant Stop: Fabricate from stainless steel. Extend at least 3 inches into wall and out to exterior face of wall. At exterior face of wall, bend metal back on itself for 3/4 inch and down into joint 1/4 inch to form a stop for retaining sealant backer rod.

c. Copper-Laminated Flashing: Provide 5-oz./sq. ft. copper sheet bonded between two (2) layers of glass-fiber cloth. Use only where flashing is fully concealed in masonry.

4. Adhesives, Primers, and Seam Tapes for Flashings: Use flashing manufacturer's standard products or products recommended by flashing manufacturer for bonding flashing sheets to each other and to substrates.

5. Colored Mortar for CMU Blocks: Packaged dry blend of Portland cement and hydrated lime and mortar pigments, all complying with the following requirements and containing no other ingredients. Portland cement shall conform to ASTM C150, Type I or II, except Type III may be used for cold-weather construction. Provide natural color or white cement as required to produce mortar color specified on plans. Hydrated lime shall comply with ASTM C207, Type S. Aggregate for colored-mortar shall comply with ASTM C144, natural sand or crushed stone of color necessary to produce required mortar color. Mortar pigments shall be natural and/or synthetic iron oxides and chromium oxides, compounded for use in mortar mixes and complying with ASTM C979. Use only pigments with a record of satisfactory performance in masonry mortar. Packaged dry mortar blend shall be mixed at the project according to ASTM C270, Type S.

6. Masonry Lintels: Built-in-place masonry lintels shall be made from bond beam CMUs with reinforcing bars placed as indicated and filled with Class A concrete.

823.07.3 Structural Steel Framing: In addition to the information in this section, all structural steel framing and welding shall, as a minimum, meet the specifications in Sections 807 and 809.

1. Materials: Provide the following for each item:

a. W-Shapes: ASTM A709, Grade 50; hot-dipped galvanized.

b. Channels, Angles: ASTM A709, Grade 50; hot-dipped galvanized.

c. Plate and Bar: ASTM A709, Grade 50; hot-dipped galvanized.

d. Cold-Formed Hollow Structural Sections: ASTM A500, Grade B, structural tubing; hot-dipped galvanized.

e. Steel Pipe: ASTM A53, Type E or Type S, Grade B; hot-dipped galvanized.

2. Bolts, Connectors, and Anchors:

a. Zinc-Coated High-Strength Bolts: ASTM A325, Type 1, heavy-hex steel structural bolts; zinc mechanically deposited.

b. Zinc-Coated High-Strength Nuts: ASTM A563, Grade DH heavy-hex carbon-steel nuts; zinc mechanically deposited.

c. Zinc-Coated High-Strength Washers: ASTM F436, Type 1, hardened carbon-steel washers; zinc mechanically deposited.

3. Fabrication: Fabricate and assemble in shop to greatest extent possible. Fabricate according to AISC 303, "Code of Standard Practice for Steel Buildings and Bridges," and to AISC 360.

4. Shear Connectors: Prepare steel surfaces as recommended by the manufacturer of shear connectors. Use automatic end welding of headed-stud shear connectors according to AWS D1.1 and manufacturer's written instructions.

5. Examination: Verify, with certified steel erector present, elevations of concrete and masonry-bearing surfaces and locations of anchor rods, bearing plates, and other embedment for compliance with requirements.

Proceed with installation only after unsatisfactory conditions have been corrected.

6. Erection: Set structural steel accurately in locations and to elevations indicated and according to AISC 303 and AISC 360.

Maintain erection tolerances of structural steel within AISC 303, "Code of Standard Practice for Steel Buildings and Bridges."

823.07.4 Storefront Systems and Windows: Meet all storefront system and window requirements below unless IBC requirements are more stringent, in which case IBC will govern. Doors attached to storefront systems shall be from the same storefront manufacturer and shall meet all IBC requirements.

1. Design: Provide a framing system that includes anchorage. Must be capable of withstanding wind load design pressures for the location as specified in the IBC and ASCE 7. Windows shall also be rated for small/large missile debris impact in accordance with ASTM E1996 and ASTM E1886

where required by the IBC. Each framing member shall provide structural strength to meet specified performance requirements. Reference to tolerances for wall thickness and other cross-sectional dimensions of storefront members are nominal and in compliance with AA aluminum standards and data.

2. Materials: Framing and components shall be of aluminum alloy and temper recommended by manufacturer for type of use and finish indicated.

a. Sheet and Plate: ASTM B209.

b. Extruded Bars, Rods, Profiles, and Tubes: ASTM B221.

c. Extruded Structural Pipe and Tubes: ASTM B429.

d. Structural Profiles: ASTM B308.

e. Thermal Transmittance (U-factor): Fixed glazing and framing areas shall have U-factor of not more than 0.45 Btu/sq. ft. x h x degrees F as determined according to NFRC 100.

f. Solar Heat Gain Coefficient: Fixed glazing and framing areas shall have a solar heat gain coefficient of no greater than 0.47 as determined according to NFRC 200.

g. Sealants: Sealants shall be in accordance with storefront system manufacturer's recommendations and approved by manufacturer to meet or exceed the IBC wind load requirements of the building.

3. Finish/Color of Framing: Provide framing with anodic finish, AAMA 611, AA-M12C22A42/A44, Class I, 0.018 mm or thicker. Submit a color chart with the manufacturer's full selection of colors to the Bridge Engineer for color selection. Make the full range of colors available at no additional cost to the Department. Finish shall have a two year warranty from the date of final acceptance.

4. Glazing – Tinted Glass: Provide 1 inch thick minimum glazing for storefront systems. Use low-E-coated, tinted, insulating laminated glass. Submit a color chart with the manufacturer's full selection of tint colors to the Bridge Engineer for color selection. Make the full range of colors available at no additional cost to the Department.

a. Minimum Thickness of Outdoor Lite: 6 mm.

b. Outdoor Lite: Tinted heat-strengthened float glass.

c. Interspace Content: Air.

d. Indoor Lite: Clear laminated glass with two plies of heat-strengthened float glass.

e. Minimum Thickness of Each Glass Ply: 6 mm.

f. Interlayer Thickness: 0.090 inch (if required by IBC for windborne debris).

g. Low-E Coating: Pyrolytic or sputtered on second or third surface.

h. Winter Nighttime U-Factor: 0.45 maximum.

i. Summer Daytime U-Factor: 0.48 maximum.

j. Visible Light Transmittance: 45 percent minimum.

k. Solar Heat Gain Coefficient: 0.47 maximum.

l. Manufacturer's Warranty Period: 10 years minimum from date of final acceptance regardless of any beneficial use gained by the department prior to the final acceptance date.

5. Glazing – Spandrel Glass: Provide 1-inch thick minimum glazing for storefront systems. Use ceramic-coated, tinted, insulating laminated spandrel glass. Submit a color chart with the manufacturer's full selection of colors to the Bridge Engineer for color selection. Make the full range of colors available at no additional cost to the Department.

a. Coating Color: Opaque; as indicated on the Drawings.

b. Minimum Thickness of Each Glass Lite: 6 mm.

c. Outdoor Lite: Tinted heat-strengthened float glass.

d. Interspace Content: Air.

e. Indoor Lite: Clear laminated glass with two plies of heat-strengthened float glass.

f. Minimum Thickness of Each Glass Ply: 6 mm.

g. Interlayer Thickness: 0.090 inch (if required by IBC for windborne debris).

h. Winter Nighttime U-Factor: 0.45 maximum.

i. Summer Daytime U-Factor: 0.48 maximum.

j. Manufacturer's Warranty Period: 10 years minimum from date of final acceptance regardless of any beneficial use gained by the department prior to the final acceptance date.

6. Accessories:

a. Fasteners: Use stainless steel fasteners approved by the manufacturer for use in the framing system.

b. Gaskets: Glazing gaskets shall be extruded EPDM rubber.

c. Perimeter Anchors: Use aluminum perimeter anchors unless shown otherwise on the plans. If steel anchors are used, provide insulation between steel material and aluminum material to prevent galvanic action in accordance with the manufacturer's recommendations.

d. Thermal Break: Provide a thermal break in accordance with AAMA TIR-A8 and test in accordance with AAMA 505.

7. Fabrication: Fabricate components according to manufacturer's installation instructions and with minimum clearances and shim spacing around perimeter of assembly, yet enabling installation and dynamic

movement of perimeter seal. Accurately fit and secure joints and corners. Make joints flush, hairline, and weatherproof.

Prepare components to receive anchor devices. Fabricate and install anchors. Arrange fasteners and attachments to conceal from view.

8. Installation: Install framing system in accordance with manufacturer's instructions and AAMA storefront and entrance guide specifications manual.

a. Dissimilar Materials: Provide separation of aluminum materials from sources of corrosion or electrolytic action contact points.

b. Weather Tight Construction: Install sill members and other members in a bed of sealant or with joint filler or gaskets, to provide weather tight construction. Coordinate installation with wall flashings and other components of construction.

c. Attachment/Alignment: Attach to structure to permit sufficient adjustment to accommodate construction tolerances and other irregularities. Provide alignment attachments and shims to permanently fasten system to building structure. Align assembly plumb and level, free of warp and twist. Maintain assembly dimensional tolerances aligning with adjacent work.

d. IBC Requirements: Secure the storefront or window systems to the building in accordance with the manufacturer's instructions in order to meet all IBC requirements.

9. Quality Assurance Qualifications:

a. Installer Qualifications: Installer shall have a minimum of 5 years experience installing storefronts similar to this project.

b. Manufacturer Qualifications: Manufacturer shall be capable of providing field service representation during construction, approving acceptable installer and approving application method.

823.07.5 Pre-Engineered Metal Roofing Systems: This Work shall include all labor, material, and equipment necessary for the design, fabrication, and erection of a pre-engineered metal roofing system as shown on the plans and specified herein. The building shall include all primary and secondary structural framing members, connections to the building structure, roofing, soffits, trim, caulk, sealant tape, accessories, and any other component part or material as required by the plans and specifications or the roofing manufacturer's system. The nominal size and slope of the roof shall be as shown on the plans. All materials shall be new, free from defects, and fabricated and erected in a good, workmanlike manner.

1. Submittals for Metal Roof Systems: Submit the metal roof system to the Bridge Engineer for review.

a. Piece Marked Erection Drawings: Include roof size; design loads; type of construction; material and gage of roofing; and type, quantity, and location of accessories.

b. Design Certification: Submit a Letter of Certification with a licensed Louisiana Engineer's seal, signed and dated.

c. Framing Assembly Drawings: Show roof framing; roof panels; connections to the building structure, flashing, and accessory installation details.

2. Delegated Design: Design light gage metal roof truss, fasteners, and connections to the main building structure, using a comprehensive engineering analysis performed by a qualified professional engineer licensed in Louisiana. Use performance requirements and design criteria complying with IBC and ASCE 7.

a. Structural Steel Sections and Welded Plate Members: Design in accordance with AISC "Specification for Structural Steel Buildings," current adopted edition.

b. Cold Formed Structural Members and Roofing Panels: Design in accordance with AISI "Specifications for the Design of Light Gage Cold-Formed Steel Structural Members," current adopted edition.

c. Wind, Snow, Seismic, and Live Loads: Follow procedures as prescribed in the MBMA "Low Rise Building Systems Manual" and the IBC. Magnitudes of wind loads shall be as specified by local codes or other governing bodies.

d. Roofing and Soffit Panels: Use 0.040 inch minimum aluminum ribbed panels with a three-coat fluoropolymer conforming to AAMA 620. Fluoropolymer finish shall contain not less than 70 percent PVDF resin by weight in both color coat and clear topcoat.

e. Sealing for Flashing and Other Areas: Use pressure sensitive weather sealant tape in strict accordance with the manufacturer's recommendations.

f. Roofing Fasteners: Construct the roofing system with all fasteners concealed. Coat all exposed fasteners to match the roof color. Exposed fasteners shall be lifetime fasteners.

g. HVAC and Electrical Equipment: Roofing manufacturer shall coordinate roof design with HVAC and electrical equipment. Subcontractors shall ensure no conflicts with their equipment.

h. Roof Penetrations: All roof penetrations and/or items attached to the roofing system shall be done in strict accordance with the manufacturer's

recommendations. Penetrations or attachments shall be done in a manner to not invalidate the roofing warranty.

3. Awnings: Center awnings over the doorways. Awnings shall be supplied by the roofing manufacturer. The canopy shall be of like-material as the roof and shall meet all IBC wind load requirements. If a metal roofing system is not installed on the structure, the awning shall follow the specifications for the roofing system described herein.

4. Flashings, Closures, Soffits and Trim: Install to meet all IBC requirements.

a. Flashing and Trim: Apply at the corners, and eaves, and wherever necessary to provide a finished appearance.

b. Flashing, Trim, Soffits and Cap: Furnish and apply the same paint system as required for the panels.

c. Roofing Panels and Trim: Provide under all exposed porch and/or soffit areas.

5. Accessories: Use industry standard gutters and downspouts as supplied by the roofing manufacturer meeting all IBC requirements.

6. Guarantees, Certifications, and Warranties:

a. Special Warranty on Panel Finishes: Provide the manufacturer's standard form in which the manufacturer agrees to repair finish or replace metal panels that show evidence of deterioration of factory-applied finishes within specified warranty period. Warranty shall be a minimum of 30 years from date of final acceptance regardless of any beneficial use gained by the department prior to the final acceptance date.

b. Weather Tightness Warranty: Manufacturer's standard form in which manufacturer agrees to repair or replace standing-seam metal roof panel assemblies that fail to remain weather tight, including leaks, within specified warranty period. Warranty shall be a minimum of 20 years from date of final acceptance regardless of any beneficial use gained by the department prior to the final acceptance date.

823.07.6 Built-Up Roofing Systems:

1. SBS Modified Bituminous Membrane Roofing: Section includes SBS modified bituminous membrane roofing, taper insulation, and roof insulation.

Install roof in accordance with the NRCA roofing and waterproofing manual as well as the SMACNA architectural sheet metal manual.

Provide installed roofing membrane and base flashings that remain watertight, do not permit the passage of water, and resist specified uplift pressures, thermally-induced movement, and exposure to weather without failure.

Provide roofing materials that are compatible with one another under conditions of service and application required, as demonstrated by the roofing manufacturer based on testing and field experience.

All roof penetrations and/or items attached to the roofing system shall be provided in strict accordance with the manufacturer's recommendations and shall not invalidate the roofing warranty.

2. Quality Assurance:

a. Installer Qualifications: Use a qualified firm that is approved, authorized, or licensed by the roofing system manufacturer to install manufacturer's product and is eligible to receive manufacturer's warranty.

b. Manufacturer Qualifications: Use a qualified manufacturer that has UL listing and FMG approval for roofing systems specified for this project. All roofing components shall be from a single manufacturer.

c. Testing Agency Qualifications: Use an independent testing agency with the experience and capability to conduct the required testing, according to ASTM E548.

3. Warranty Requirements: Roofing manufacturer shall provide a minimum 20-year written warranty from date of final acceptance of project, and shall include all components of the roofing system by the manufacturer.

4. Products:

a. SBS-Modified Asphalt Sheet Materials: For roofing membrane sheets, use ASTM D6163, Grade S, Type I, glass-fiber-reinforced, SBS-modified asphalt sheet; smooth surfaced. For roofing membrane cap sheets, use ASTM D6163, Grade G, Type I, glass-fiber-reinforced, SBS-modified asphalt sheet; granular surfaced.

b. Base Flashing Sheet Materials: For backer sheet covering wood sheathing parapets use ASTM D4601, Type II, asphalt-impregnated and coated, glass fiber sheet, dusted with fine material surfacing on both sides.

For all other backer sheet applications, use ASTM D6163, Grade S, Type I, glass-fiber-reinforced, SBS-modified asphalt sheet; smooth surfaced.

Flashing sheet shall be ASTM D6221, Grade G, Type I, composite polyester and glass-fiber-reinforced, SBS-modified asphalt sheet; granular surfaced.

Liquid applied flashing shall be a liquid and fabric reinforced flashing system created with a stitch-bonded polyester scrim and a two-component, moisture cured, elastomeric, liquid applied flashing material, consisting of an asphalt extended urethane base material and an activator.

c. Auxiliary Roofing Membrane Materials: Use auxiliary materials as recommended by roofing system manufacturer for the intended use and compatible with the roofing membrane.

Use the roofing system manufacturer's asphalt-based, two-component, asbestos-free, hot or cold-applied adhesive specially formulated for compatibility with the membrane material to seal roof membranes.

Use the roofing system manufacturer's asphalt-based, two-component, asbestos-free, trowel-grade, hot or cold-applied adhesive specially formulated for compatibility with the flashing material to seal flashing.

Use mastic sealant as required by the roofing manufacturer.

Use ceramic-coated roofing granules provided by the roofing system manufacturer that match the specified cap sheet.

d. Walkway Pads: Provide mineral-granule-surfaced, reinforced modified asphalt composition, slip-resisting, foot traffic pads provided by the roofing manufacturer where shown on the plans or where required for maintenance access. Install in accordance with the roofing manufacturer's instructions. Pads shall be 32 inches x 32 inches.

e. Roof Insulation: Provide preformed roof insulation boards that comply with requirements and referenced standards, selected from manufacturer's standard sizes and of thicknesses indicated.

Use polyisocyanurate board insulation that conforms to ASTM C1289, Type II. Insulation package shall have an R-value greater than 18.5 and minimum thickness of 3 inches. Use multiple layers with no boards thicker than 1.5 inches.

Where tapered insulation is required, use ASTM C1289, factory-tapered insulation boards fabricated to a slope of 1/4 inch per 12 inches, unless otherwise specified.

To adhere insulation to the roof substrate, use the manufacture's no VOC, two-component cold fluid-applied adhesive formulated for the roof insulation.

For insulation cant strips, use ASTM C728, perlite insulation board.

f. Parapet Cap Flashing: Use stainless steel flashing that complies with ASTM A240, the NRCA Roofing Manual, and the SMACNA Architectural sheet metal manual unless otherwise specified on the plans. Provide complete with all clips and non-corrosive marine grade stainless steel fasteners. Fasteners shall be connected on the side of the flashing and not on the top surface. Parapet shall have joint covers at every corner.

g. Roof Drains: Size shall be as shown in the plans; use marine grade stainless steel dome with marine grade stainless steel mesh.

5. Execution: Verify that roof openings and penetrations are in place

and set and braced and that roof drains are securely clamped in place.

Verify that wood cants, blocking, curbs, and nailers are securely anchored to roof deck at penetrations and terminations, and that nailers match the thickness of the insulation.

Verify that the substrate deck is free of all oils and debris.

Modify any necessary equipment curbs to provide a minimum 8 inches base flashing height.

Install roofing system in strict accordance with the manufacturer's instructions.

6. Warranty Inspection: The completed roof system shall be inspected by a representative of the roofing manufacturer to verify that the installation meets all requirements of the warranty. The written warranty shall be signed and placed in the mechanical operation & maintenance manual.

823.07.7 Louvers: Install louvers in the sizes shown on the plans and in accordance with the manufacturer's recommendations. Louver frames and blades shall be hurricane-rated aluminum with zero water penetration. Louvers and louver components shall be designed to meet or exceed all IBC standards. All louvers shall have an AMCA Certified Ratings Seal.

1. Louver Material: ASTM B221, Alloy 6063-T5, T-52, or T6. Frames and blade thickness shall comply with IBC wind and missile impact loads. Blades shall have a minimum thickness of 0.080 inch.

2. Fasteners: Furnish aluminum fasteners to match finish and color listed below.

3. Louver Finish/Color: Provide louvers with an anodic finish, AAMA 611, AA-M12C22A42/A44, Class I, 0.018 mm or thicker. Submit a color chart to the Bridge Engineer for color selection with the manufacturer's full selection of colors at no additional cost.

4. Accessories: Furnish accessories complete with seals and stainless steel insect screens. All accessories shall be of similar material to the louvers and shall meet all IBC requirements.

5. Field Verification for Renovation Projects: Field verify all louver dimensions prior to submittal. Louver submittal shall have field dimensions clearly indicated.

823.07.8 Doors and Door Frames: Install steel doors and frames in the sizes shown on the plans and in accordance with this specification. Installation procedures and fabrication tolerances shall be as recommended by the SDI Standards 111A and 117 and by the manufacturer's recommendations. Hardware for steel doors shall be in accordance with 823.07.9. All galvanizing

shall be G90 or greater for both doors and frames.

1. Steel Doors: Steel doors shall be hollow metal, insulated, and of extra heavy-duty Grade III flush construction. Steel shall be stretcher level standard hot-dipped galvanized in accordance with ASTM A653 and A924. All panel seams shall be continuous welded. Steel door panels shall be 14 gage panels with 14 gage end closures. Steel doors shall be reinforced for application of hardware and closures. Reinforcing shall be 10 gage galvanized steel for hinges, 14 gage for closures, and 14 gage elsewhere. Prepare doors to receive mortise and concealed finish hardware, including cutouts, reinforcing, drilling, and tapping in accordance with the required hardware and templates provided by hardware suppliers. Drilling and/or tapping for surface-applied finish hardware may be done at the site.

Thoroughly clean all surfaces and chemically prepare for the acceptance of a factory-applied, baked on or air-dried, corrosion inhibiting primer coat of paint, and a factory applied electrostatic top coat. Submit a color chart with the manufacturer's full selection of colors to the Bridge Engineer for color selection. Make the full range of colors available at no additional cost to the Department.

Where glazing is required, apply non-removable stops on the outside and removable beads on the inside. Steel doors shall be 1-3/4 inches thick completely filled with suitable sound deadening and self-extinguishing insulating polyurethane core material. All exterior doors shall be foamed in place, vertically steel-stiffened core. All exterior doors are to be windstorm certified.

2. Steel Door Frames: Furnish steel door frames manufactured of 14 gage galvanized steel conforming to ASTM designations A653 and A924. Use unit type welded construction throughout with corners mitered, welded, and ground smooth on the outside. Weld removable steel spreaders to the bottom of the frame. Provide and install 14 gage galvanized steel anchors. Provide a minimum of 6 wall anchors and 2 floor anchors per frame. Provide two silencers on drill stops of strike jams. Finish as specified under "Steel Doors" above.

3. Aluminum Doors: Aluminum doors shall be heavy-duty, minimum 5-ply composite laminated construction. Exterior door ply shall be one-piece 0.040 inch smooth 5005-H14 stretcher-leveled aluminum alloy facing. Facings shall be commercially-bonded edge-to-edge to one-piece, oil-tempered hardboard backer. Doors shall be 1-3/4 inches thick. Core shall be an organic-based marine-grade honeycomb core with high compression strength of 94.8 psi (ASTM C365) and internal aluminum hardware backup

tube. The hardware backup tube shall be contiguous for the full perimeter of the door to allow for all specified and all non-specified hardware reinforcement. All fasteners shall be concealed and shall be non-magnetic stainless steel or aluminum. Door edges and face sheets shall be flush in appearance; face sheets shall be trimmed with replaceable extruded aluminum reglets of 6063-T5 alloy on perimeter edges. Lock stile shall have aluminum beveled-edge and integral wool-pile weather stripping.

a. Finish: Provide anodized, architectural class I finish, 0.018 millimeters minimum thickness meeting AAMA 611, AA-M12C22A44. Color shall match the storefront system (if applicable). Submit a color chart with the manufacturer's full selection of colors to the Bridge Engineer for color selection. Make the full range of colors available at no additional cost to the Department.

b. Wind Loading: Door shall be wind load tested and certified conforming to ASTM E330 at static air pressure difference 80 psf. Secure door to meet all IBC requirements. All exterior doors are to be windstorm certified.

4. Aluminum Frames: Construct aluminum heavy-duty frames from extruded aluminum 6063-T5 alloy with a minimum wall thickness of 0.125 inch. Cut corners square and fasten using concealed stainless steel screws. Snap in door stop to receive replaceable wool pile weather stripping. Screw-on door stops are not acceptable.

Finish shall be anodized, architectural class I, 0.018 millimeters minimum thickness meeting AAMA 611, AA-M12C22A44. Color shall match the storefront system (if applicable). Submit a color chart with the manufacturer's full selection of colors to the Bridge Engineer for color selection. Make the full range of colors available at no additional cost to the Department.

823.07.9 Door Hardware: Furnish hardware as necessary to complete all doors on facilities. The items of hardware described shall be considered as standard unless otherwise specified. All hardware used throughout the Work shall be equal in size, weight, material and workmanship. Items not specified, but necessary for the completion of the Work, shall match the quality and finish of the items that are described herein. Finish throughout shall be dull chrome US26D finish on brass or bronze or US32D finish on stainless steel, unless otherwise specified. All hardware shall match throughout the facility. Furnish a complete schedule of hardware indicating thereon all hands of doors, keying information, finishes, templates and any other pertinent data. Key all locksets and cylinders to fit all doors. Furnish 12 keys to the Project Engineer.

All items of hardware to be fastened to metal or pre-finished doors and/or frames shall be furnished to door template. Furnish templates and/or samples of approved hardware to the respective door and frame suppliers. Include a list of all necessary templates in the hardware schedule. Provide hardware materials and equipment as specified below:

1. Door Hinges: Hinges shall be stainless steel on all doors, and sized in accordance with the door manufacturer's recommendations. All doors shall have three hinges per leaf. Door hinges shall conform to BHMA A156.1.

2. Door Mutes: Provide door mutes for all metal door frames.

3. Door Stops: Provide door stops for all doors where levers or closures may strike walls or trim.

4. Surface Closers: Provide BHMA A156.4, Grade 1; rack-and-pinion hydraulic type surface closures with adjustable sweep and latch speeds controlled by key-operated valves and forged-steel main arm. Comply with manufacturer's written recommendations for size of door closers depending on size of door, exposure to weather, and anticipated frequency of use as shown on the plans. Provide factory-sized closers, adjustable to meet field conditions and requirements for opening force. Provide corrosion-resistant model with all aluminum body and non-ferrous covers.

5. Latch Sets/Lock Sets with Deadbolt: Latch sets shall be as scheduled on the plans and as described herein. Latch sets shall be certified under ANSI A156.13 Series 1000 for Grade 1. Mortise cylinder and escutcheons shall be by the same manufacturer as lock set. Lock and latch sets shall be stainless steel and have a US32D satin stainless steel finish.

6. Locks and Latches:

a. Strikes: Provide manufacturer's standard strike for each lock bolt or latch bolt complying with requirements indicated for applicable lock or latch and with strike box and curved lip extended to protect frame; finished to match lock or latch.

b. Flat-Lip Strikes: For locks with three-piece antifriction latch bolts, provide flat-lip strikes as recommended by manufacturer.

c. Mortise Locks: Furnish mortise locks complying with BHMA A156.13; Operational Grade 1; heavy gage wrought steel zinc dichromated cases; Series 1000.

Provide heavy-wrought stainless steel escutcheons.

Provide a cast stainless steel lever. Submit to the Bridge Engineer the manufacturer’s full range of lever trims for selection.

Trim finish shall comply with BHMA A156.18; 630 (US32D).

d. Thresholds, Weather Stripping, Door Bottoms, and Drip Caps:

Provide thresholds, weather stripping, door bottoms, and drip caps on all exterior doors. Thresholds shall be mill-finish aluminum and meet BHMA A156.21. Weather stripping shall be fabricated to full width of openings.

e. Flush Bolts: Provide flush bolts on the top and bottom of the inactive leafs of double doors; the bottom bolt shall have a dust proof cover.

f. Panic Bars: Panic bars shall be as scheduled on the plans and described herein. Panic bar shall be UL-listed for panic exit devices and meet BHMA A156.3, Grade 1. Lockset shall be standard operation with key-in-lever design. Push bar, lockset, and lever shall have a US32D satin stainless steel finish. Mortise cylinders and escutcheons shall be by same manufacturer as lock set and have a US32D satin stainless steel finish.

g. Astragals: Provide astragals on the exterior between the active and inactive leafs of double doors. The astragal shall meet BHMA A156.22.

h. Metal Drip Edge: Fabricate metal drip edge from stainless steel. Provide above exterior doorways.

i. Double Doors: Double doors shall include a latch set or lock set as described above for both the active and inactive leafs of the door.

823.07.10 Caulk and Sealant: Caulk all outside joints at the perimeter of all door and window openings. Caulk shall not be affected by long exposure to extremes of outside temperature; shall be free from volatile or drying oils; shall be mixed to the proper consistency at the factory; and shall be used as directed by the manufacturer. Caulking compounds for each application shall have the following properties:

1. Exterior Windows and Doors: Provide a one component, neutral curing, silicone grade sealant designed specifically for structural bonding applications of glazing. Sealant shall meet ASTM C920 type, grade NS, class 50, use NT. Sealant shall be as recommended by storefront manufacturer for wind loading.

2. Masonry Sealant: Provide a single component, moisture cure, non-sag, gun-grade elastomeric (polyurethane) sealant, designed for application in joints subject to structural movement. Sealant shall meet ASTM C920 for type S, grade NS, class 25. Color shall match exterior CMU block color.

823.08 FACILITY MECHANICAL SYSTEMS. See Section 821, Mechanical Systems.

823.09 FACILITY ELECTRICAL SYSTEMS. See Section 822, Electrical Systems.

823.10 MEASUREMENT. No measurement of materials will be made. Any estimate of the materials shown on the plans is approximate and no guarantee is made that it is the correct weight (mass), dimensions, or numbers of items to be furnished. It is the contractor's responsibility to determine the correct weight (mass), dimensions, or numbers of each item to be furnished. No adjustment in contract price will be made due to errors in the estimated weight (mass), dimensions, or numbers of items shown on the plans.

823.11 PAYMENT. Payment for the completed and accepted items will be made at the contract lump sum price, which includes furnishing, fabricating, erecting, cleaning and painting, galvanizing or other coating materials; furnishing all required labor, shop fabrication, equipment, tools, staging, falsework, forms, welding, bolts, and other hardware; and the performance of all work necessary to complete the item.

When changes in the work are ordered by the engineer, which vary from the contract, compensation will be in accordance with 109.04.

Payment will be made under:

Item No.	Pay Item	Pay Unit
823-01	Bridge Operator’s House	Lump Sum
823-02	Bridge Operator’s House - Repair/Rehabilitation	Lump Sum
823-03	Bridge Machinery House	Lump Sum
823-04	Bridge Machinery House - Repair/Rehabilitation	Lump Sum
823-05	Architectural Facilities	Lump Sum
823-06	Architectural Facilities - Repair/Rehabilitation	Lump Sum

Section 824 (Reserved)

Section 825 (Reserved)

Section 826 (Reserved)

Section 827 (Reserved)

Section 828 (Reserved)

Section 829
Instrumentation and Evaluation

829.01 DESCRIPTION. Furnish and install instrumentation, provide power and backup power systems, access for installation and removal of instrumentation, and loadings for structural evaluation as specified. Also, provide instrumentation consultant engineering services when specified.

829.02 MATERIALS. Comply with the following sections and subsections.

Electrical Systems	822
Metals	1013
Carbon Steel Bolts, Nuts, and Washers	1013.08
High Strength Bolts, Nuts, Washers, and Direct Tension Indicators (DTIs)	1013.08

Provide mechanically galvanized bolts, nuts, washers, and DTIs in accordance with Section 811.

Provide stainless steel machine screws and washers for fastening.

Instrumentation shall be as shown on the plans or when specified, as designed by the contractor's consultant.

829.03 CONSTRUCTION REQUIREMENTS.

829.03.1 Submittals: When the Bridge Instrumentation and Evaluation Plan is not provided, submit to the Bridge Engineer for review a "Bridge Instrumentation and Evaluation Plan" in a+ccordance with 801.05. Submit the plan no later than 30 calendar days prior to commencing the work. The engineer will evaluate the plan for conformance with the plans and specifications. Allow 21 calendar days for review. Resubmit any parts of the submittal returned for correction and allow an additional 14 calendar days for review of each resubmittal.

No changes in the Bridge Instrumentation and Evaluation Plan shall be made after final acceptance without the concurrence of the engineer.

Provide at least the following information in the Bridge Instrumentation and Evaluation Plan:

- Name and address of supplier and manufacturer of component and associate information and cut sheet.

- Detailed drawings of placement of all sensors, method and sequence of sensor placement, and layout of wiring, conduit, and data collection system.
- Details of the access system for attaching and removing instrumentation and associated equipment.
- Schematic of data acquisition system. Plans for sampling frequency, data retrieval, and software to be used. Software setup including configuration of ports and flags, and IP addresses.
- Instrumentation enclosure and breakaway mounting pole meeting NEMA 4X requirements.
- Estimation of power consumption. Planned power and backup power system for a minimum of 7 days uptime.
- Detailed plan for all test loading.
- Traffic control for each operation associated with instrumentation and evaluation.
- Other information shown in the plans or required by the engineer.

829.03.2 Instrumentation: Furnish instrumentation as shown on the plans. Upon completion of instrumentation work, all instrumentation, power supply, data collection systems, data loggers, conduit and wiring, and data transmitters will become the property of the Department.

Weather proof instrumentation with a rating of IP66 or higher for above water applications and a rating of IP68 for submerged applications. Shelter wiring and data collection systems from the weather.

829.03.3 Instrumentation Assistance: Provide access and assistance as required for installation and removal of instrumentation, and access for data collection during the project.

829.03.4 Evaluation: Furnish test loading equipment, equipment operation, and traffic control as required by the plans.

829.03.5 Instrumentation Services: When specified, provide consultant services to design the Instrumentation and Evaluation Plan, install instrumentation in accordance with the plans, monitor instrumentation, and upon completion of the instrumentation and evaluation work, remove instrumentation not required for future use.

829.04 INSTRUMENTATION REMOVAL. Remove all sensors, data acquisition systems along with all associated conduits, and instrumentation enclosure when shown on the plans. Deliver sensors and data acquisition systems to the engineer after removal. Any unsalvageable materials shall

become the property of the contractor. Dispose of beyond the limits of the project in accordance with Section 202.

829.05 MEASUREMENT.

829.05.1 Instrumentation: Instrumentation will be measured per lump sum, which includes all materials, equipment, tools, and incidentals necessary to complete this item. Type and quantity of instrumentation will be shown on the plans or as specified in the Instrumentation and Evaluation Plan.

829.05.2 Instrumentation Assistance: Provide instrumentation assistance for instrumentation items shown on the plans. Instrumentation Assistance will be measured per lump sum. Measurement includes all equipment, material, labor, and time necessary to complete this item.

Instrumentation Assistance occurrences that are necessary because of contractor error will not be measured for payment.

829.05.3 Evaluation: Evaluation is measured per lump sum, which includes all materials, equipment, tools, and incidentals necessary to complete this item. The type and description of the evaluation will be shown on the plans.

829.05.4 Instrumentation Services: Instrumentation services will be measured per lump sum. Measurement will include consultant services to development the Instrumentation and Evaluation Plan, install the instruments, monitoring service, data collection, data analysis, reporting, and removal of instrumentation upon completion of the work.

829.06 PAYMENT.

Payment will be made under:

Item No.	Pay Item	Pay Unit
829-01	Instrumentation	Lump Sum
829-02	Instrumentation Assistance	Lump Sum
829-03	Evaluation	Lump Sum
829-04	Instrumentation Services	Lump Sum

Section 830
Repair and Rehabilitation

830.01 DESCRIPTION. Perform structural repairs and rehabilitation as specified.

830.02 MATERIALS. Materials shall be specific to the required actions of the contract. Comply with the following sections and subsections:

Structural Concrete	805.02
Reinforcing Steel	806.02
Structural Metals	807.02
Steel Grid Flooring	808.02
Bridge Railings, Hand Railings and Permanent Roadway Barriers	810.02
Painting and Protective Coatings	811.03
Treated Timber	812.02
Concrete Approach Slabs	813.02
Bearings	814.02
Joints	815.02
Drainage Systems	816.02
Movable Bridges	820.04
Mechanical Systems	821.04
Electrical Systems	82204
Facilities	82304
Portland Cement Concrete	901.02
Epoxy Resin Adhesives	1017

830.02.1 Structural Concrete Patching: Conform to Table 830-1 for structural concrete patching unless otherwise specified. An exception is made for the specific case of patching tops of decks, where rapid setting patching materials for concrete from the Approved Materials List may be used.

Table 830-1
Structural Concrete Patching Material Requirements

Parameter	Test	Value
Minimum Compressive Strength	ASTM C39 or ASTM C109	2000 psi (min.) at 24 hrs 4000 psi (min.) at 7 days
Curing Shrinkage	ASTM C157	0.07% max. at 28 days
Curing Expansion	ASTM C157	0.03% max. at 1 day
Thermal Expansion	ASTM C531	5.0×10^{-6} in/in/°F (min.) at 28 days 9.0×10^{-6} in/in/°F (max.) at 28 days
Bond Strength by Slant Shear	ASTM C882	2000 psi (min.) at 3 days

830.03 SUBMITTALS. Conform to Section 801. Review times will be in accordance with 801.05.1.2.3.

830.03.1 Structural Concrete Patching: As a minimum, submit the following information for review:

Name and type of the proposed repair mortar material and associated Portland cement concrete;

Name and address of supplier and manufacturer of the repair mortar and associated bonding agent;

Product data sheets showing compliance in accordance with the latest approved materials sampling manual specifications. The engineer may require documentation from an approved independent testing authority to confirm the performance criteria stated on product data sheets;

Detailed proposal of concrete removal, application, and curing techniques to be used;

For site mixed cementitous mortar, the following additional information is required:

1. Name, type, and manufacturer of the proposed cement;
2. Name, type, and supplier of the proposed aggregates;
3. Test sample for DOTD testing labs; and

Details for repairs of damaged deformed reinforcing steel. These details shall conform to Section 806.

830.03.2 Span Movement: Prior to beginning work, submit to the Bridge Engineer for review a span movement plan designed, sealed, signed and dated by a Professional Engineer registered in the State of Louisiana which addresses all structural, environmental and traffic management goals and commitments of the contract.

830.03.3 Structure Jacking: Prior to beginning work, submit to the Bridge Engineer for review a structure jacking plan designed, sealed, signed and dated by a Professional Engineer registered in the State of Louisiana. Provide as a minimum the following information:

- Design of the structure jacking system;
- Equipment;
- Loads and capacities;
- Sequence of operations;
- Shoring; and
- Traffic management goals and commitments.

830.03.4 Bolt-Rivet Replacement (Structural Steel): Submit to the engineer for review a fastener removal plan demonstrating that the proposed sequence and method of removal is a safe method and will not damage or adversely affect the structural members involved.

830.04 CONSTRUCTION REQUIREMENTS. Construction requirements will be specific to the structural repair and rehabilitation work specified.

830.04.1 Structural Concrete Patching: Repair designated areas shown on the plans. Remove loose or defective concrete. Saw cut and/or chip a perpendicular or back-tapered face along the periphery of the repair area so that the minimum depth of repair is approximately 1/2-inch to prevent feathered edges. Sandblast and remove all loose particles, dirt, deteriorated concrete or other substances from the repair area that could impair the bond between the existing concrete and reinforcing steel to remain and repair material. Maintain all reinforcing steel at its original position and clean exposed steel to meet SSPC-SP3 or SSPC-SP6 prior to placement of repair material. Replace damaged or corroded reinforcing steel with bars and splices of equal or greater capacity and as directed. Add reinforcing steel as specified in the plans.

Apply a bonding agent to the entire repair area including the reinforcing steel prior to placement of the patch material, and mix, apply and cure materials all in accordance with the manufacturer's recommendations.

Remove forms as directed by the engineer. Do not allow mortar or concrete to freeze during placement or curing. Sound completed repairs to locate any defective areas. Remove and repair defective areas at no additional cost or time to the Department. Finish patched areas in accordance with the plans and 805.08.

Temporary shoring is required for structure members that have insufficient load carrying capacity during the patching process. Orientation of repair area may affect material and construction requirements.

Maintain materials in original sealed containers until the time of use and store in accordance with the manufacturer's recommendations.

Materials shall be accompanied by a certificate of manufacture. Materials stored beyond the manufacturer's recommended shelf life shall not be used and will be rejected.

830.04.2 Span Movement: Span movement may involve transportation of a span to or from a staging area, jacking and sliding a span from one location to another, lifting a span from one location to another, etc. as specified.

Provide all equipment, temporary works, staging areas for span construction, jacking, lifting, movement of a superstructure span or unit using mechanized methods, placement of the span or unit, and the restoration of the staging areas to their original condition. All work shall be in accordance with the contract.

830.04.3 Structure Jacking: Structure jacking is the raising and lowering of structures as specified.

Jack the structure in accordance with the Contract and as directed by the engineer. Do not damage the structure. Temporary bracing and shoring may be required to prevent damage to the structure and to temporarily support structure loads. If used, bracing and shoring shall be designed, sealed, signed and dated by a Professional Engineer, registered in the State of Louisiana.

Damage is defined as any change in the structure which permanently decreases the capacity and/or reduces the life span of the structure or any of its components. Whether or not jacking has caused damage will be determined by the engineer and repairs shall be made to the satisfaction of the engineer at no additional cost or time to the Department.

830.04.4 Epoxy Injection: Repair cracks in concrete using an epoxy injection system in accordance with the contract, the manufacturer's recommendations, and as directed by the engineer.

830.04.5 Bolt-Rivet Replacement (Structural Steel): Remove existing fasteners identified in the Contract and replace with new high strength fastener assemblies conforming to Section 807. Do not damage any structural steel to remain during fastener removal. Unless specified otherwise, remove fasteners by mechanical means only. Removal by torching is not allowed. Unless specified otherwise, all removed fasteners and any coating material

will become the property of the contractor and disposed of in accordance with Section 202. Comply with Section 811 for removal of the existing coatings.

Any damaged structural steel resulting from fastener removal shall be repaired or replaced to the satisfaction of the engineer at no cost or time to the Department.

Unless specified otherwise, all fastener holes shall be reamed up to a circular hole having a diameter 1/16-inch larger than the nominal size of the replacement fastener. Clean and grind fastener assembly contact areas flat and smooth prior to painting and fastener assembly installation.

The area of fastener replacement and new fastener assembly shall be protected with a coating system. If the plans do not provide paint or coating system requirements or pay items, the area of fastener replacement and new fastener assembly shall be coated in accordance with Section 811 with a paint system compatible with the existing coating to remain. Apply a minimum of one prime coat of the specified paint system to fastener assembly contact areas.

Testing, installation and inspection of bolts, nuts, washers and DTI devices shall be in accordance with the contract and Section 807.

830.05 MEASUREMENT.

830.05.1 Bridge Superstructure / Substructure Repair: Bridge Superstructure/Substructure Repair will be measured for payment per each contiguous repair as defined in the Contract.

830.05.2 Tunnel Repair: Tunnel Repair will be measured for payment per each contiguous repair, per square foot of repair area, or per lump sum as defined in the contract.

830.05.3 Girder Strengthening: Girder strengthening will be measured per each girder strengthened.

830.05.4 Span Movement: Span movement will be measured per each move specified in the plans.

830.05.5 Structure Jacking: Structure jacking will be measured on a lump sum basis.

830.05.6 Epoxy Injection: Epoxy injection will be measured per linear foot repaired.

830.05.7 Bolt – Rivet Replacement: This item, completed and accepted, will be measured for payment per each fastener replacement, and will include all materials, coatings, testing, labor, equipment, fastener removal plan, tools, and the performance of all work necessary to remove and dispose

of the existing coatings and fasteners, and furnish, install, inspect and test high strength bolts, nuts, washers and DTI devices.

830.05.8 Structural Concrete Patching: Structural Concrete Patching will be measured by the square foot of patched material placed. When a repair involves multiple surfaces, such as a corner, measurement will be made on all surfaces repaired.

Measurement will include concrete removal, repair and replacement of reinforcing steel, placement of specified additional reinforcing steel, surface preparation, placement of repair materials, and all work required to complete the item in accordance with the contract. When the contract requires concrete removal by hydro-blasting or milling, the concrete removal will be measured and paid for under a separate removal item.

830.06 PAYMENT. Payment will be made at the contract unit price and will include all labor, equipment, materials, and incidentals required to complete the work.

Payment will be made under:

Item No.	Pay Item	Pay Unit
830-01	Bridge Superstructure Repair	Each
830-02	Bridge Substructure Repair	Each
830-03	Tunnel Repair	Each
830-04	Tunnel Repair	Square Foot
830-05	Tunnel Repair	Lump Sum
830-06	Girder Strengthening (Type)	Each
830-07	Structural Concrete Patching	Square Foot
830-08	Span Movement	Each
830-09	Structure Jacking	Lump Sum
830-10	Epoxy Injection	Linear Foot
830-11	Bolt-Rivet Replacement (Structural Steel)	Each