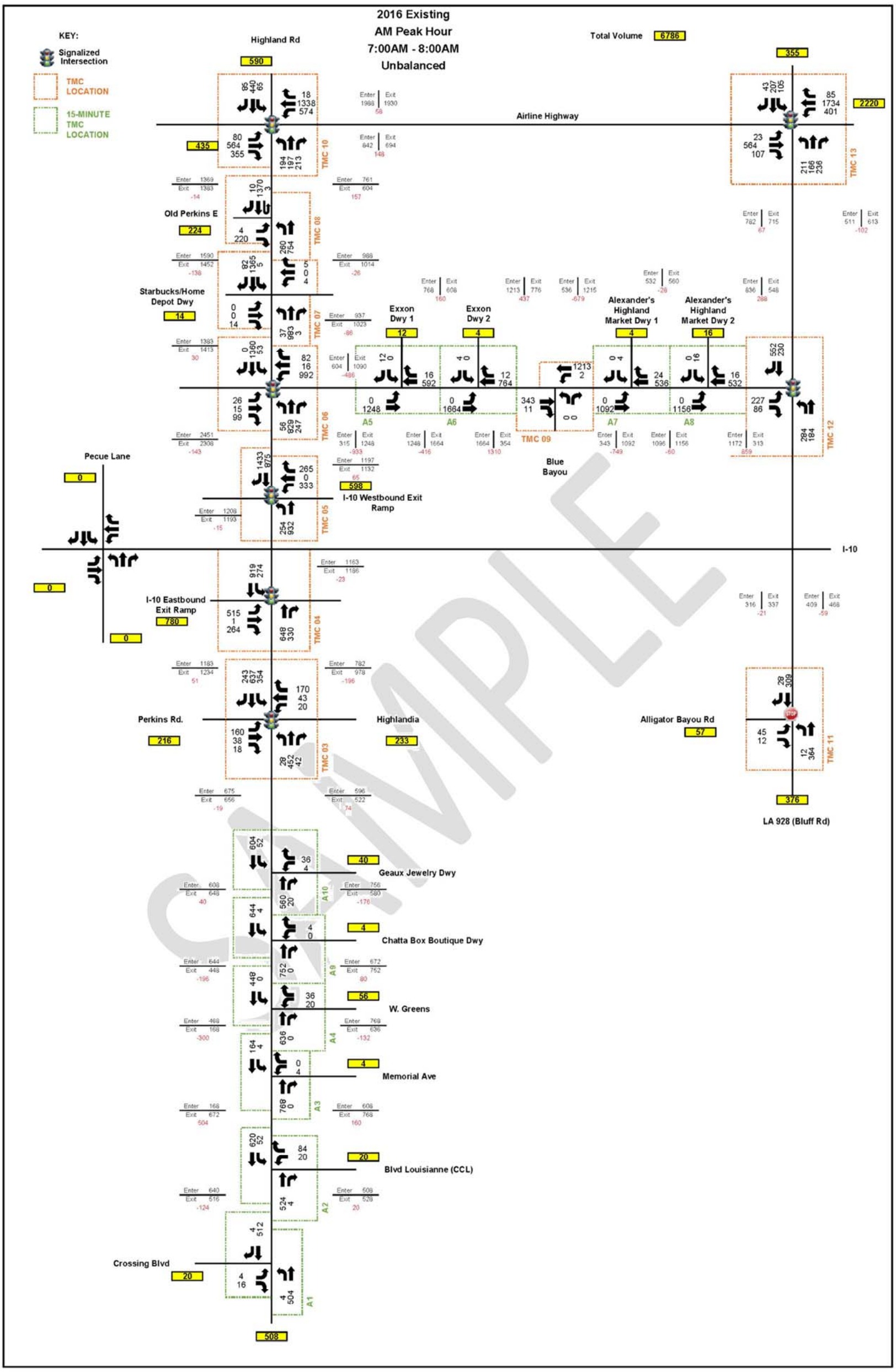

This correspondence and the information contained herein is prepared solely for the purpose of identifying, evaluating and planning safety improvements on public roads which may be implemented utilizing federal aid highway funds; and is therefore exempt from discovery or admission into evidence pursuant to 23 U.S.C. 409.

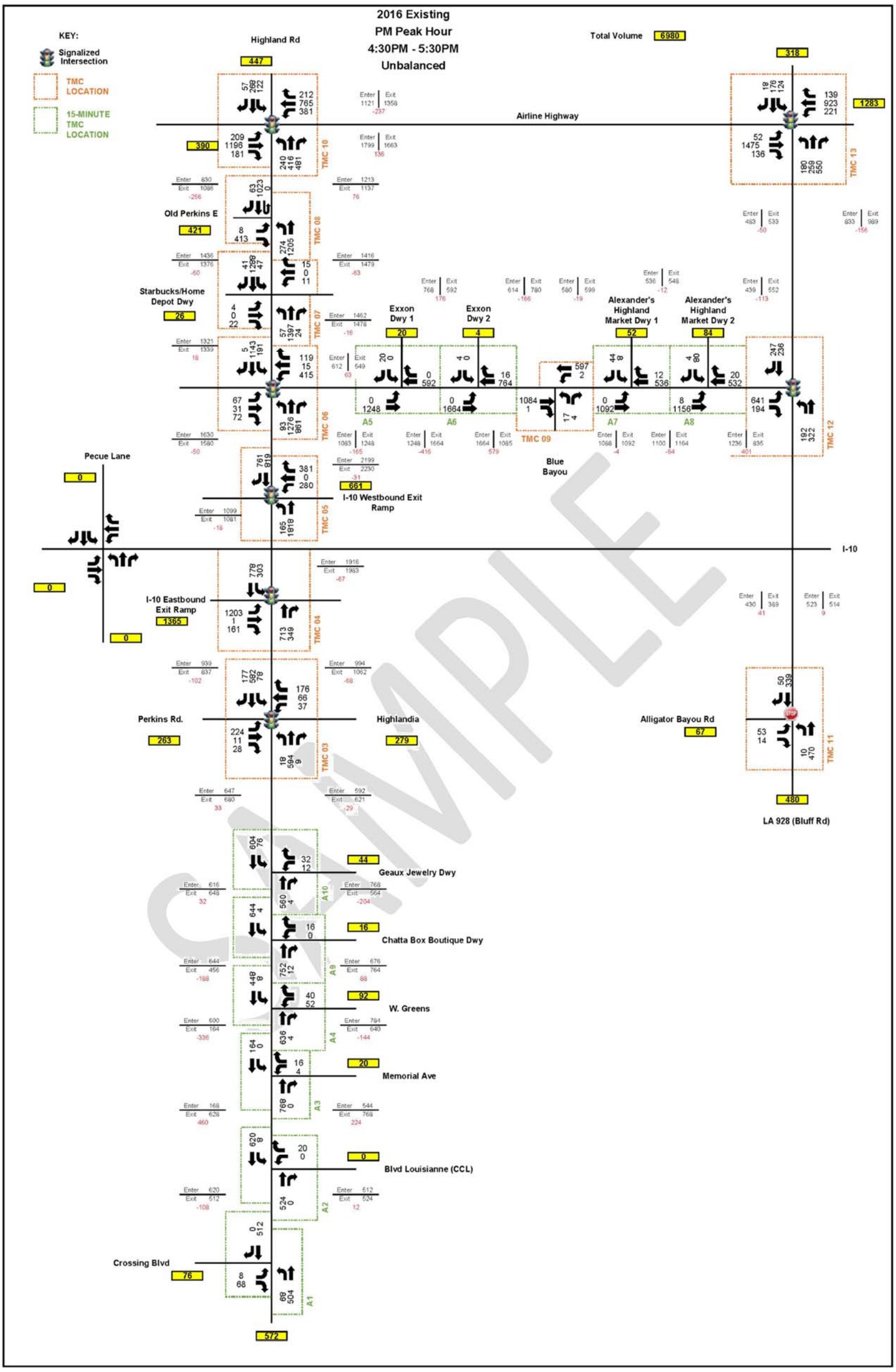

This correspondence and the information contained herein is prepared solely for the purpose of identifying, evaluating and planning safety improvements on public roads which may be implemented utilizing federal aid highway funds; and is therefore exempt from discovery or admission into evidence pursuant to 23 U.S.C. 409.

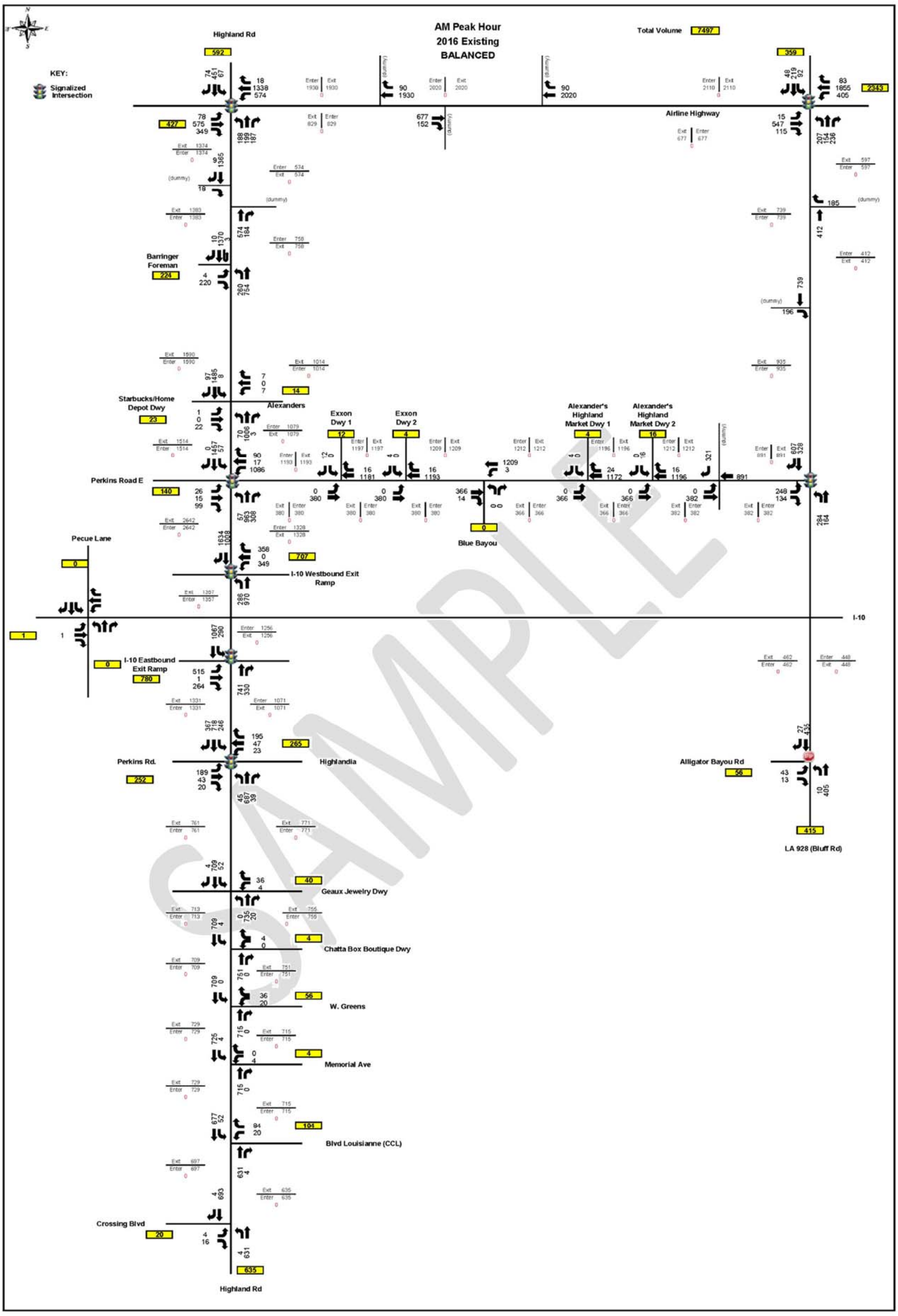

SAMPLE

This correspondence and the information contained herein is prepared solely for the purpose of identifying, evaluating and planning safety improvements on public roads which may be implemented utilizing federal aid highway funds; and is therefore exempt from discovery or admission into evidence pursuant to 23 U.S.C. 409.

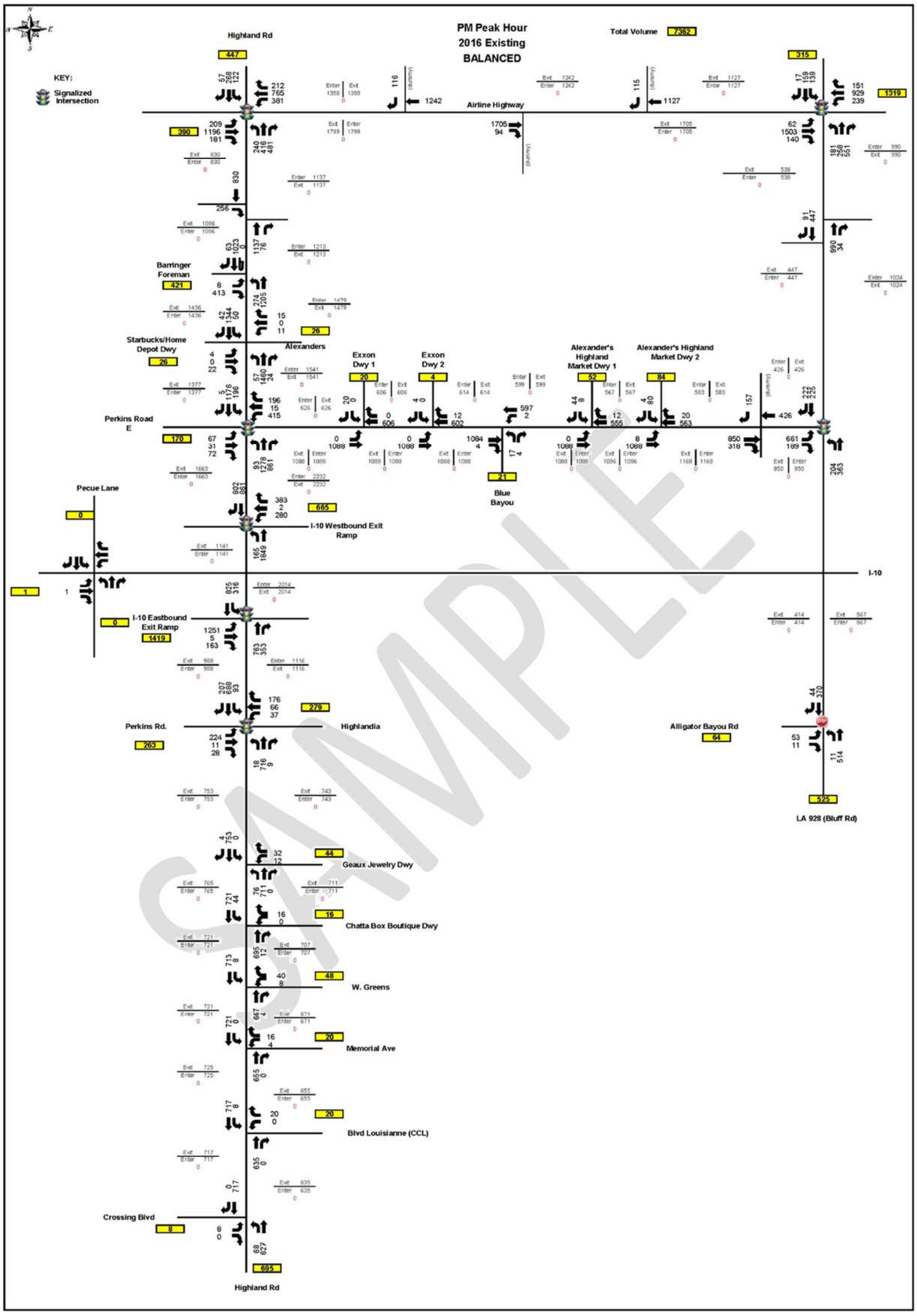

SAMPLE

This correspondence and the information contained herein is prepared solely for the purpose of identifying, evaluating and planning safety improvements on public roads which may be implemented utilizing federal aid highway funds; and is therefore exempt from discovery or admission into evidence pursuant to 23 U.S.C. 409.

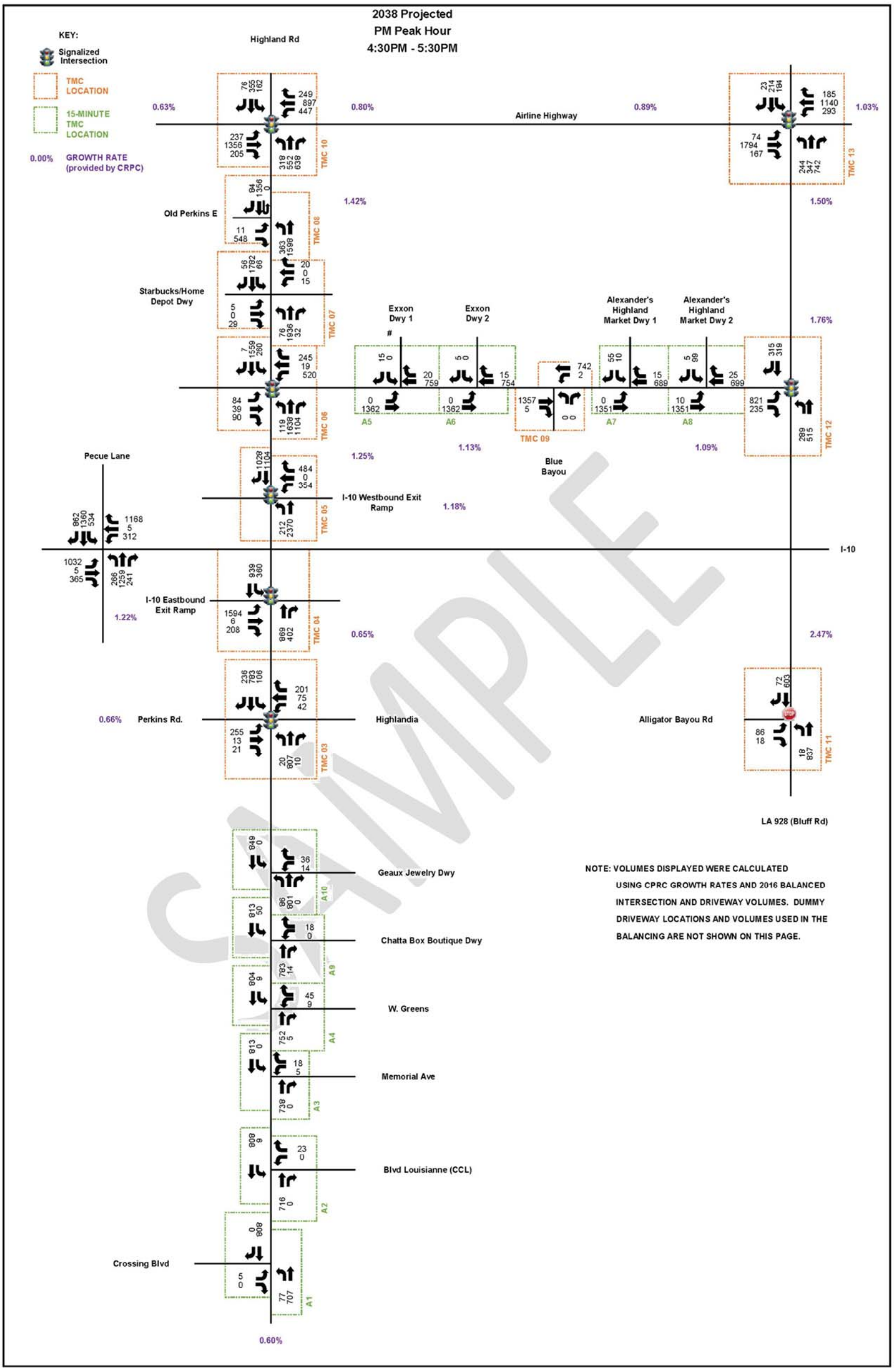

This correspondence and the information contained herein is prepared solely for the purpose of identifying, evaluating and planning safety improvements on public roads which may be implemented utilizing federal aid highway funds; and is therefore exempt from discovery or admission into evidence pursuant to 23 U.S.C. 409.

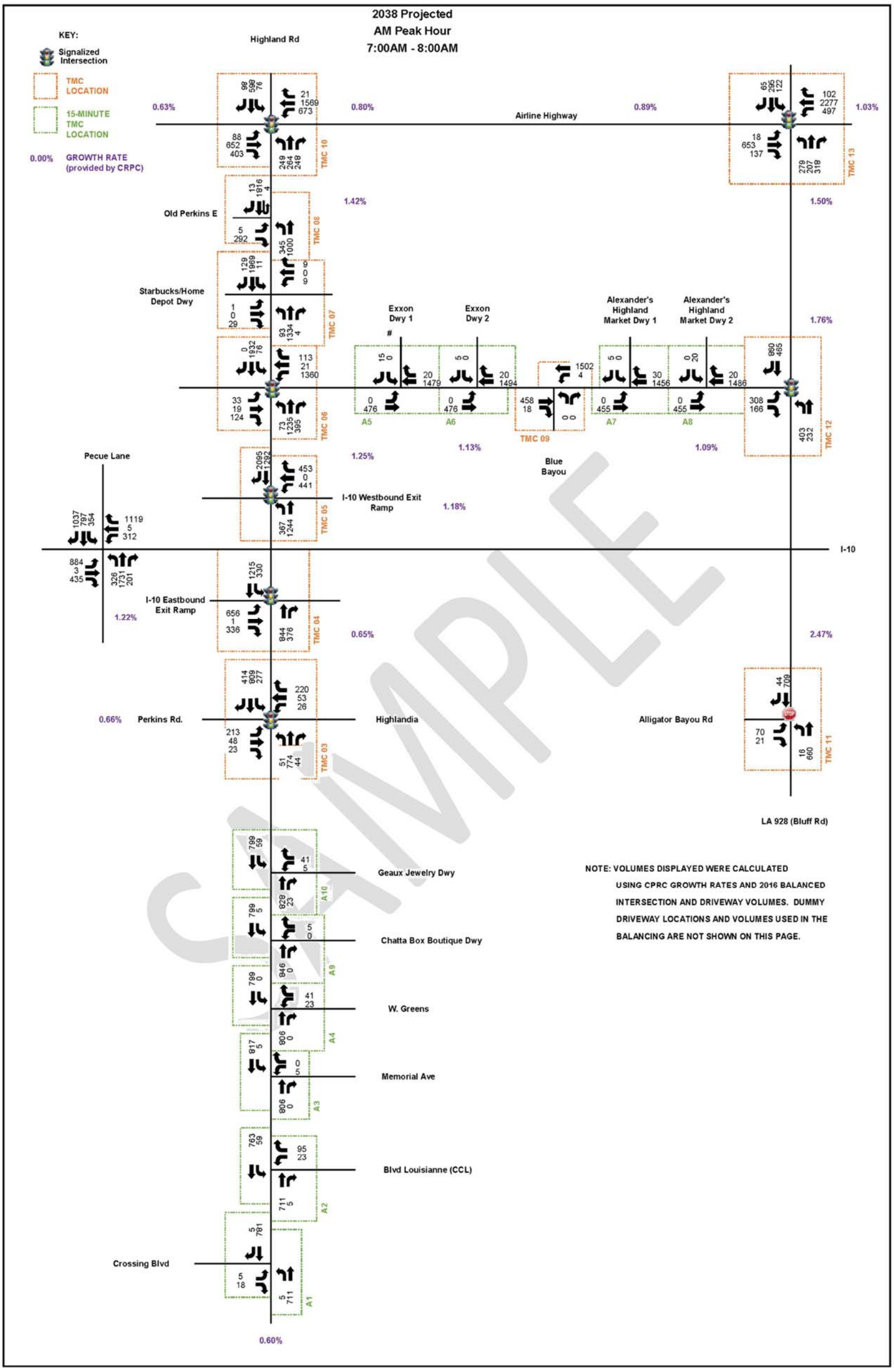

This correspondence and the information contained herein is prepared solely for the purpose of identifying, evaluating and planning safety improvements on public roads which may be implemented utilizing federal aid highway funds; and is therefore exempt from discovery or admission into evidence pursuant to 23 U.S.C. 409.