FEDERAL PROJECT	STATE PROJECT	PARISH	SHEET NO.

OPENING					H	E	C	J	D	L	M	S	BARS E							BARS E_1				#4 BARS J		BARS O				#4 BARS P		#4BARS H		#4BARS V		BARS M		#4 BARS TH		#4 BARS TH1		#4 BARS TV		#4 BARS TV1		CONC.	STEEL
Eq. Dia.	Span	Rise	No.	Area	Lgth. ft.in.	Lgth. ft.in.	Lgth. ft.in.	Lgth. ft.in.	Lgth. ft.in.	Lgth. ft.in.	Lgth. ft.in.	Lgth. ft.in.	Size	No.	Lgth. ft.in.	Spc. in.	X ft.in.	Y in.	Z ft.in.	Size	No.	Lgth. ft.in.	Spc. in.	No.	Lgth. ft.in.	Size	No.	Lgth. ft.in.	Spc. in.	No.	Lgth. ft.in.	No.	Lgth. ft.in.	No.	Lgth. in.	Size	No.	Lgth. ft.in.	No.	Lgth. ft.in.	No.	Lgth. ft.in.	No.	Lgth. ft.in.	No.	Lgth. in.	CU. YDS.	LBS.
60	71	47	1	18.1	4-11	0-9	0-6	4-2	0-10	10-2	26-6	2-0	4	36	6-2	7.0	0-10	2	5-2	4	0	0-0	0.0	8	9-10	4	27	5-1	12.0	8	26-2	0	0-0	0	0-0	4	2	26-2	0	0-0	0	0-0	0	0-0	0	0-0	0	7.35	469
60	71	47	2	36.2	4-11	0-9	0-6	4-2	0-10	10-2	34-8	2-0	4	40	6-2	7.0	0-10	2	5-2	4	0	0-0	0.0	8	9-10	4	35	5-1	12.0	8	34-4	4	1-9	10	8	4	2	34-4	0	0-0	0	0-0	0	0-0	0	0-0	0	9.38	575
60	71	47	3	54.3	4-11	0-9	0-6	4-2	0-10	10-2	42-11	2-0	4	44	6-2	7.0	0-10	2	5-2	4	0	0-0	0.0	8	9-10	4	44	5-1	12.0	8	42-7	8	1-9	15	8	4	2	42-7	0	0-0	0	0-0	0	0-0	0	0-0	0	11.43	684
60	71	47	4	72.4	4-11	0-9	0-6	4-2	0-10	10-2	51-1	2-0	4	48	6-2	7.0	0-10	2	5-2	4	0	0-0	0.0	8	9-10	4	52	5-1	12.0	8	50-9	12	1-9	20	8	4	2	50-9	0	0-0	0	0-0	0	0-0	0	0-0	0	13.46	789
60	71	47	5	90.5	4-11	0-9	0-6	4-2	0-10	10-2	59-4	2-0	4	52	6-2	7.0	0-10	2	5-2	4	0	0-0	0.0	8	9-10	4	60	5-1	12.0	8	59-0	16	1-9	25	8	4	2	59-0	0	0-0	0	0-0	0	0-0	0	0-0	0	15.51	894
60	71	47	6	108.6	4-11	0-9	0-6	4-2	0-10	10-2	67-6	2-0	4	56	6-2	7.0	0-10	2	5-2	4	0	0-0	0.0	8	9-10	4	68	5-1	12.0	8	67-2	20	1-9	30	8	4	2	67-2	0	0-0	0	0-0	0	0-0	0	0-0	0	17.53	999
66	77	52	1	21.9	5-4	0-10	0-8	4-3	1-0	11-1	28-10	2-2	4	30	7-0	9.0	1-1	2	5-9	4	0	0-0	0.0	8	10-9	4	30	5-5	12.0	9	28-6	0	0-0	0	6	8	4	2	28-6	0	0-0	0	0-0	0	0-0	0	0-0	0	10.18	518
66	77	52	2	43.8	5-4	0-10	0-8	4-3	1-0	11-1	37-8	2-2	4	34	7-0	9.0	1-1	2	5-9	4	0	0-0	0.0	8	10-9	4	38	5-5	12.0	9	37-4	4	1-11	12	8	4	2	37-4	0	0-0	0	0-0	0	0-0	0	0-0	0	12.91	639
66	77	52	3	65.7	5-4	0-10	0-8	4-3	1-0	11-1	46-7	2-2	4	38	7-0	9.0	1-1	2	5-9	4	0	0-0	0.0	8	10-9	4	47	5-5	12.0	9	46-3	8	1-11	18	8	4	2	46-3	0	0-0	0	0-0	0	0-0	0	0-0	0	15.67	763
66	77	52	4	87.6	5-4	0-10	0-8	4-3	1-0	11-1	55-6	2-2	4	42	7-0	9.0	1-1	2	5-9	4	0	0-0	0.0	8	10-9	4	56	5-5	12.0	9	55-2	12	1-11	24	8	4	2	55-2	0	0-0	0	0-0	0	0-0	0	0-0	0	18.43	888
66	77	52	5	109.5	5-4	0-10	0-8	4-3	1-0	11-1	64-5	2-2	4	46	7-0	9.0	1-1	2	5-9	4	0	0-0	0.0	8	10-9	4	65	5-5	12.0	9	64-1	16	1-11	30	8	4	2	64-1	0	0-0	0	0-0	0	0-0	0	0-0	0	21.19	1012
66	77	52	6	131.4	5-4	0-10	0-8	4-3	1-0	11-1	73-3	2-2	4	50	7-0	9.0	1-1	2	5-9	4	0	0-0	0.0	8	10-9	4	74	5-5	12.0	9	72-11	20	1-11	36	8	4	2	72-11	0	0-0	0	0-0	0	0-0	0	0-0	0	23.92	1136
72	83	57	1	26.0	5-9	0-10	0-8	4-5	1-0	11-11	31-0	2-3	4	40	7-5	7.5	1-1	2	6-2	4	0	0-0	0.0	10	11-7	4	33	5-7	11.5	9	30-8	0	0-0	0	6	8	4	2	30-8	0	0-0	0	0-0	0	0-0	0	0-0	0	11.39	627
72	83	57	2	52.0	5-9	0-10	0-8	4-5	1-0	11-11	40-6	2-3	4	44	7-5	7.5	1-1	2	6-2	4	0	0-0	0.0	10	11-7	4	43	5-7	11.5	9	40-2	5	2-0	12	8	4	2	40-2	0	0-0	0	0-0	0	0-0	0	0-0	0	14.42	763
72	83	57	3	78.0	5-9	0-10	0-8	4-5	1-0	11-11	50-0	2-3	4	48	7-5	7.5	1-1	2	6-2	4	0	0-0	0.0	10	11-7	4	53	5-7	11.5	9	49-8	10	2-0	18	8	4	2	49-8	0	0-0	0	0-0	0	0-0	0	0-0	0	17.45	899
72	83	57	4	104.0	5-9	0-10	0-8	4-5	1-0	11-11	59-6	2-3	4	52	7-5	7.5	1-1	2	6-2	4	0	0-0	0.0	10	11-7	4	63	5-7	11.5	9	59-2	15	2-0	24	8	4	2	59-2	0	0-0	0	0-0	0	0-0	0	0-0	0	20.48	1035
72	83	57	5	130.0	5-9	0-10	0-8	4-5	1-0	11-11	69-0	2-3	4	56	7-5	7.5	1-1	2	6-2	4	0	0-0	0.0	10	11-7	4	73	5-7	11.5	9	68-8	20	2-0	30	8	4	2	68-8	0	0-0	0	0-0	0	0-0	0	0-0	0	23.51	1172
72	83	57	6	156.0	5-9	0-10	0-8	4-5	1-0	11-11	78-6	2-3	4	60	7-5	7.5	1-1	2	6-2	4	0	0-0	0.0	10	11-7	4	83	5-7	11.5	9	78-2	25	2-0	36	8	4	2	78-2	0	0-0	0	0-0	0	0-0	0	0-0	0	26.54	1308
84	95	67	1	37.0	6-7	1-0	0-8	4-10	1-0	13-8	35-2	2-7	4	60	4-4	5.5	1-3	2	2-11	4	30	5-1	11.0	12	13-4	4	51	6-2	8.5	10	35-2	0	0-0	0	8	8	4	2	35-2	0	0-0	0	0-0	0	0-0	0	0-0	0	14.36	878
84	95	67	2	74.0	6-7	1-0	0-8	4-10	1-0	13-8	46-9	2-7	4	66	4-4	5.5	1-3	2	2-11	4	34	5-1	11.0	12	13-4	4	66	6-2	8.5	10	46-1	6	2-4	16	8	4	2	46-1	0	0-0	0	0-0	0	0-0	0	0-0	0	18.11	1071
84	95	67	3	111.0	6-7	1-0	0-8	4-10	1-0	13-8	57-0	2-7	4	72	4-4	5.5	1-3	2	2-11	4	38	5-1	11.0	12	13-4	4	81	6-2	8.5	10	56-11	12	2-4	24	8	4	2	56-11	0	0-0	0	0-0	0	0-0	0	0-0	0	21.84	1223
84	95	67	4	148.0	6-7	1-0	0-8	4-10	1-0	13-8	68-1	2-7	4	78	4-4	5.5	1-3	2	2-11	4	42	5-1	11.0	12	13-4	4	97	6-2	8.5	10	67-9	18	2-4	32	8	4	2	67-9	0	0-0	0	0-0	0	0-0	0	0-0	0	25.56	1460
84	95	67	5	185.0	6-7	1-0	0-8	4-10	1-0	13-8	79-0	2-7	4	84	4-4	5.5	1-3	2	2-11	4	46	5-1	11.0	12	13-4	4	112	6-2	8.5	10	78-8	24	2-4	40	8	4	2	78-8	0	0-0	0	0-0	0	0-0	0	0-0	0	29.32	1653
84	95	67	6	222.0	6-7	1-0	0-8	4-10	1-0	13-8	89-10	2-7	4	90	4-4	5.5	1-3	2	2-11	4	50	5-1	11.0	12	13-4	4	127	6-2	8.5	10	89-6	30	2-4	48	8	4	2	89-6	0	0-0	0	0-0	0	0-0	0	0-0	0	33.05	1846
96	112	75	1	48.0	7-3	1-1	0-8	5-2	1-0	15-0	39-8	3-0	4	80	4-7	4.5	1-4	2	3-1	4	40	5-8	9.0	12	14-8	4	64	6-7	7.5	11	39-4	0	0-0	0	9	8	4	2	39-4	0	0-0	0	0-0	0	0-0	0	0-0	0	17.14	1141
96	112	75	2	96.0	7-3	1-1	0-8	5-2	1-0	15-0	52-5	3-0	4	88	4-7	4.5	1-4	2	3-1	4	45	5-8	9.0	12	14-8	4	84	6-7	7.5	11	52-1	6	2-9	18	8	4	2	52-1	0	0-0	0	0-0	0	0-0	0	0-0	0	21.81	1398
96	112	75	3	144.0	7-3	1-1	0-8	5-2	1-0	15-0	65-2	3-0	4	96	4-7	4.5	1-4	2	3-1	4	50	5-8	9.0	12	14-8	4	105	6-7	7.5	11	64-10	12	2-9	27	8	4	2	64-10	0	0-0	0	0-0	0	0-0	0	0-0	0	26.49	1659
96	112	75	4	192.0	7-3	1-1	0-8	5-2	1-0	15-0	77-11	3-0	4	104	4-7	4.5	1-4	2	3-1	4	55	5-8	9.0	12	14-8	4	125	6-7	7.5	11	77-7	18	2-9	36	8	4	2	77-7	0	0-0	0	0-0	0	0-0	0	0-0	0	31.16	1916
96	112	75	5	240.0	7-3	1-1	0-8	5-2	1-0	15-0	90-8	3-0	4	112	4-7	4.5	1-4	2	3-1	4	60	5-8	9.0	12	14-8	4	146	6-7	7.5	11	90-4	24	2-9	45	8	4	2	90-4	0	0-0	0	0-0	0	0-0	0	0-0	0	35.84	2178
96	112	75	6	288.0	7-3	1-1	0-8	5-2	1-0	15-0	103-5	3-0	4	120	4-7	4.5	1-4	2	3-1	4	65	5-8	9.0	12	14-8	4	166	6-7	7.5	11	103-1	30	2-9	54	8	4	2	103-1	0	0-0	0	0-0	0	0-0	0	0-0	0	40.51	2435
108	128	83	1	60.5	7-11	1-2	0-9	5-4	1-0	16-5	43-11	4-0	4	98	4-10	4.0	1-6	2	3-2	4	49	6-2	8.0	14	16-1	4	88	6-11	6.0	11	43-7	0	0-0	0	10	8	4	2	43-7	0	0-0	0	0-0	0	0-0	0	0-0	0	20.93	1458
108	128	83	2	121.0	7-11	1-2	0-9	5-4	1-0	16-5	59-1	4-0	4	111	4-10	4.0	1-6	2	3-2	4	56	6-2	8.0	14	16-1	4	119	6-11	6.0	11	58-9	7	3-10	20	8	4	2	58-9	0	0-0	0	0-0	0	0-0	0	0-0	0	27.02	1826
108	128	83	3	181.5	7-11	1-2	0-9	5-4	1-0	16-5	74-4	4-0	4	124	4-10	4.0	1-6	2	3-2	4	63	6-2	8.0	14	16-1	4	149	6-11	6.0	11	74-0	14	3-10	30	8	4	2	74-0	0	0-0	0	0-0	0	0-0	0	0-0	0	33.15	2190
108	128	83	4	242.0	7-11	1-2	0-9	5-4	1-0	16-5	89-6	4-0	4	137	4-10	4.0	1-6	2	3-2	4	70	6-2	8.0	14	16-1	4	179	6-11	6.0	11	89-2	21	3-10	40	8	4	2	89-2	0	0-0	0	0-0	0	0-0	0	0-0	0	39.24	2554
108	128	83	5	302.5	7-11	1-2	0-9	5-4	1-0	16-5	104-9	4-0	4	150	4-10	4.0	1-6	2	3-2	4	77	6-2	8.0	14	16-1	4	210	6-11	6.0	11	104-5	28	3-10	50	8	4	2	104-5	0	0-0	0	0-0	0	0-0	0	0-0	0	45.37	2922
108	128	83	6	363.0	7-11	1-2	0-9	5-4	1-0	16-5	119-11	4-0	4	163	4-10	4.0	1-6	2	3-2	4	84	6-2	8.0	14	16-1	4	240	6-11	6.0	11	119-7	35	3-10	60	8	4	2	119-7	0	0-0	0	0-0	0	0-0	0	0-0	0	51.46	3286
120	142	91	1	74.5	8-7	1-3	0-10	5-7	1-0	17-9	47-9	4-0	4	106	5-2	4.0	1-8	2	3-4	4	53	6-8	8.0	16	17-5	4	115	7-4	5.0	12	47-5	0	0-0	0	12	8	5	4	47-5	10	17-5	0	0-0	26	8-3	7	8	25.15	2197
120	142	91	2	149.0	8-7	1-3	0-10	5-7	1-0	17-9	64-2	4-0	4	119	5-2	4.0	1-8	2	3-4	4	60	6-8	8.0	16	17-5	4	154	7-4	5.0	12	63-10	8	3-10	24	8	5	4	63-10	10	17-5	5	3-10	30	8-3	14	8	32.24	2728
120	142	91	3	223.5	8-7	1-3	0-10	5-7	1-0	17-9	80-7	4-0	4	132	5-2	4.0	1-8	2	3-4	4	67	6-8	8.0	16	17-5	4	194	7-4	5.0	12	80-3	16	3-10	36	8	5	4	80-3	10	17-5	10	3-10	34	8-3	21	8	39.32	3264
120	142	91	4	298.0	8-7	1-3	0-10	5-7	1-0	17-9	97-0	4-0	4	145	5-2	4.0	1-8	2	3-4	4	74	6-8	8.0	16	17-5	4	233	7-4	5.0	12	96-8	24	3-10	48	8	5	4	96-8	10	17-5	15	3-10	38	8-3	28	8	46.41	3795
120	142	91	5	372.5	8-7	1-3	0-10	5-7	1-0	17-9	113-5	4-0	4	158	5-2	4.0	1-8	2	3-4	4	81	6-8	8.0	16	17-5	4	272	7-4	5.0	12	113-1	32	3-10	60	8	5	4	113-1	10	17-5	20	3-10	42	8-3	35	8	53.49	4326
120	142	91	6	447.0	8-7	1-3	0-10	5-7	1-0	17-9	129-10	4-0	4	171	5-2	4.0	1-8	2	3-4	4	88	6-8	8.0	16	17-5	4	312	7-4	5.0	12	129-6	40	3-10	72	8	5	4	129-6	10	17-5	25	3-10	46	8-3	42	8	60.58	4861

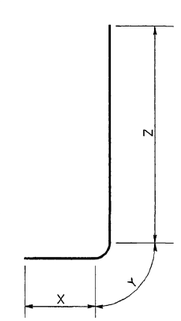

BARS E

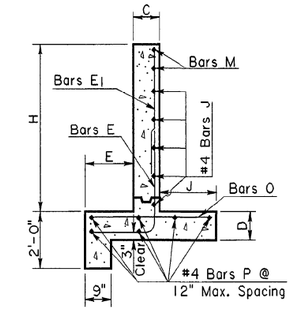

SECTION A-A

STEEL SHOWN IN BACK FACE OF WALL

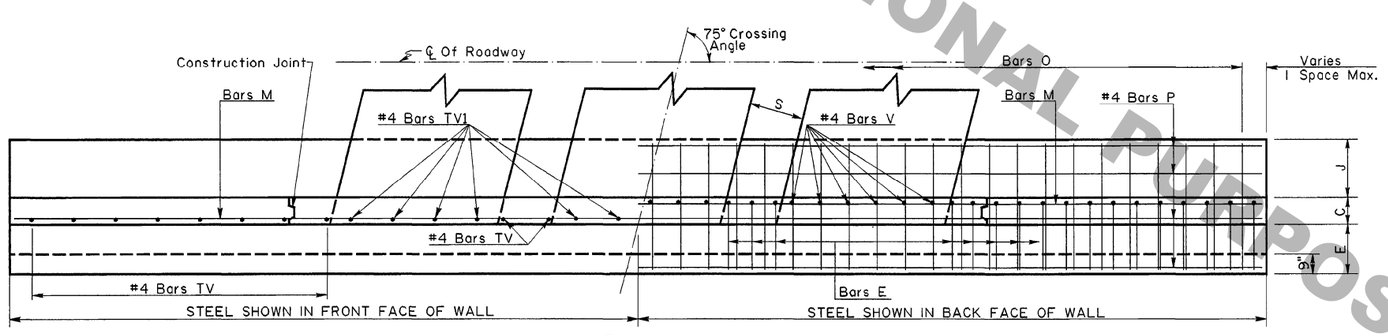

PLAN

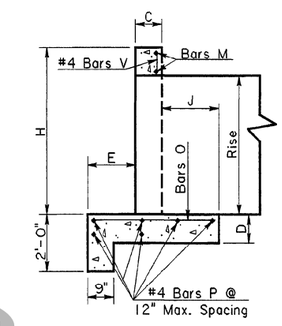

SECTION B-B

STEEL SHOWN IN BACK FACE OF WALL

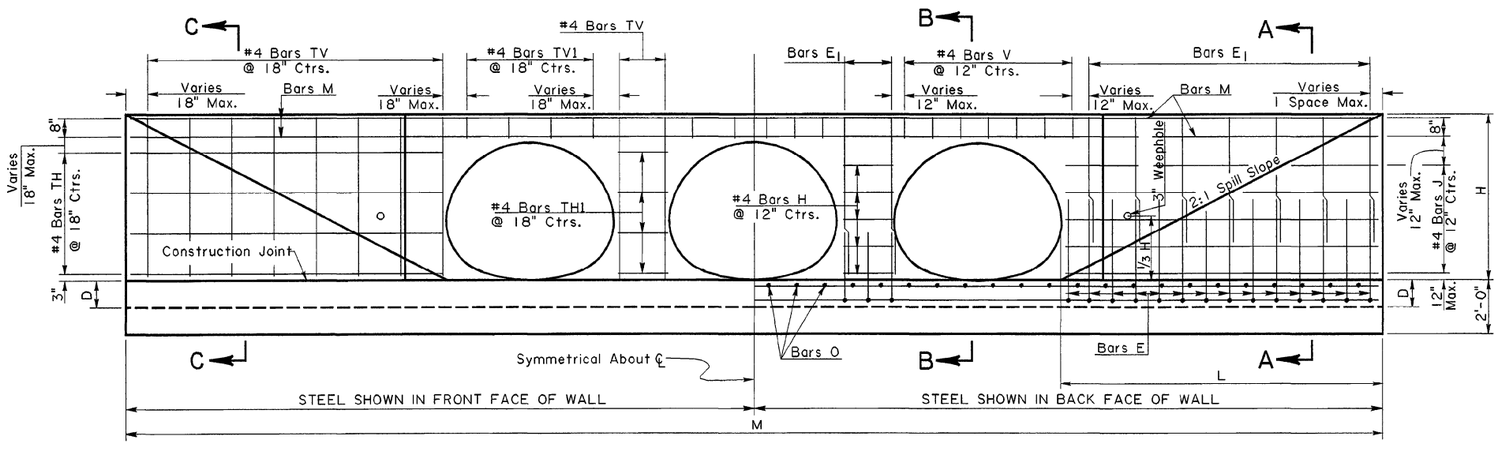

ELEVATION

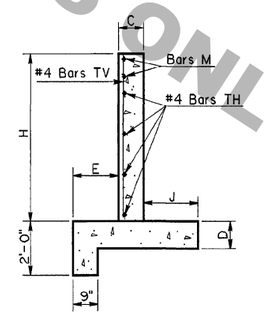

SECTION C-C

STEEL SHOWN IN FRONT FACE OF WALL

GENERAL NOTES

DESIGN: Method- Headwalls are designed as retaining walls according to current AASHTO working stress procedures. Walls are designed for a lateral earth pressure of 40 psf with 2.0 feet of surcharge. Overturning- A minimum safety factor of 2.0 is provided against overturning. The resultant of loads is within the middle third of the footing. Sliding - A minimum safety factor of 1.5 is provided against sliding. The coefficient of friction between the footing and soil is 0.5. Foundation - The design soil bearing pressure is 1800 psf. When strength of the soil at the site is less than 1800 psf, bedding material shall be added under the footing as directed.

MATERIALS: Concrete- All concrete shall be class A. All exposed edges shall be ¾ inch chamfered. Reinforcing Steel - Reinforcement shall be Grade 60. Bar spacing dimensions are to bar centers. Steel required for lap splices not detailed shall not be measured for payment. Reinforcing steel shall have 2" cover unless otherwise specified. Steel and concrete quantities shown in table are for one headwall.

A 1'-6" square of geotextile fabric (see Section 1019 of the LA DOTD Standard Specifications) shall be placed in contact with concrete behind each weephole in addition to approximately 2 cu.ft. of concrete sand (see Section 1003.02 of the LA DOTD Standard Specifications).

CONSTRUCTION JOINTS: All construction joints shown are optional. For details of keyed construction joints see Standard Plan CM-49. For construction joints without key, the joint surface shall be roughened. Hardened surface shall be cleaned. Immediately before new concrete is placed, joint surface shall be saturated with water.

STATE OF LOUISIANA
WILLIAM M. RAY
REG. No. 24936
REGISTERED PROFESSIONAL ENGINEER IN CIVIL ENGINEERING
William M. Ray 7-26-01

DATE	DESCRIPTION	BY
11-14-97	Revised General Notes And Assigned Name HW75CMPA2	JCM

REVISIONS

SPECIAL DETAIL NO. HW75CMPA2 — SHEET 1 OF 1

STRAIGHT HEADWALL FOR CMPA ON A 75° CROSSING 60" EQUIV. THRU 120" EQUIV.

DATED January 6, 1993

STATE OF LOUISIANA
DEPARTMENT OF TRANSPORTATION AND DEVELOPMENT

DESIGNED PAA	DETAILED KAJ	DIR. spdetail/headwall/
CHECKED	CHECKED PAA	FILE hw75cmpa.dgn

HYDRAULICS SECTION

NOT OFFICIAL PLANS UNTIL SIGNED FOR CONSTRUCTION PURPOSES ONLY

28-NOV-2007 11:10
R:\Standard Plans\Special Details\English\Old Sheets\HW75CMPA2.dgn