06-NOV-2008 11:21

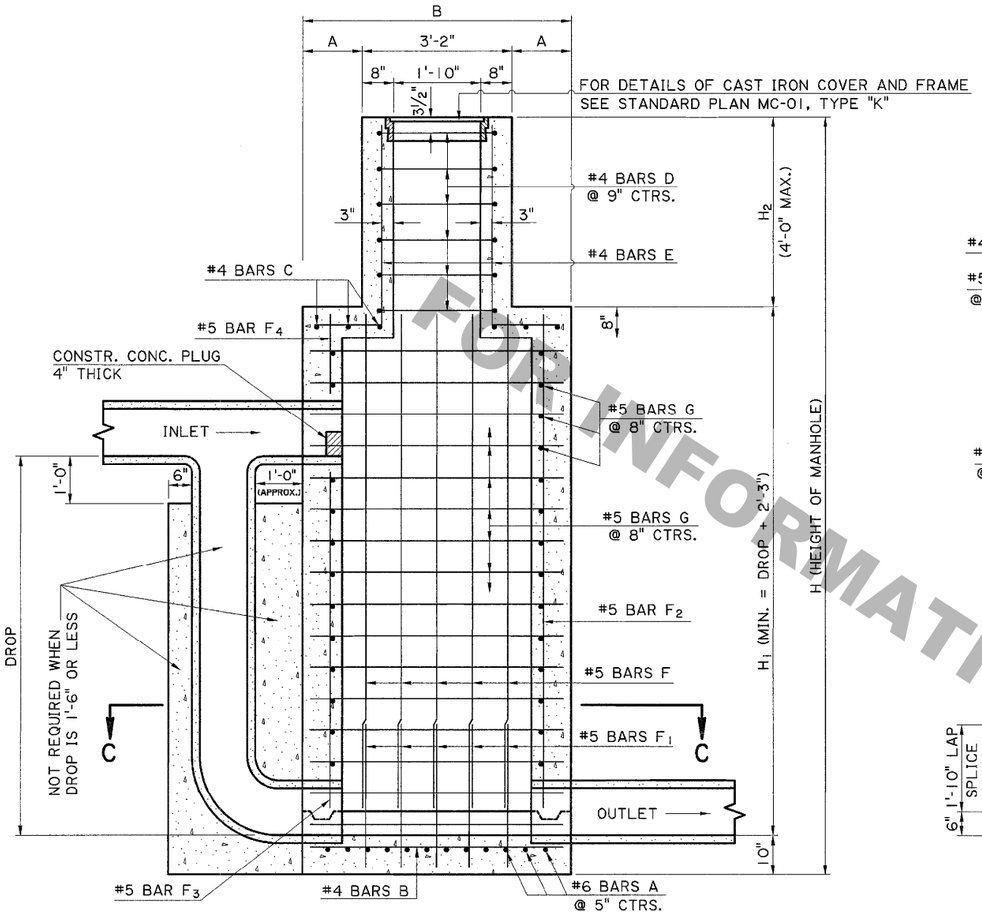

SECTION A-A

NOTE: WHEN DIFFERENCE IN F.L. ELEVATIONS OF INLET AND OUTLET (DROP) DOES NOT EXCEED 1'-6", CONNECTION OF INLET TO MANHOLE WILL BE MADE IN SAME MANNER AS THAT OF OUTLET, (VERTICAL PIPE, ELBOW AND CONCRETE ENCLOSEMENT NOT REQUIRED)

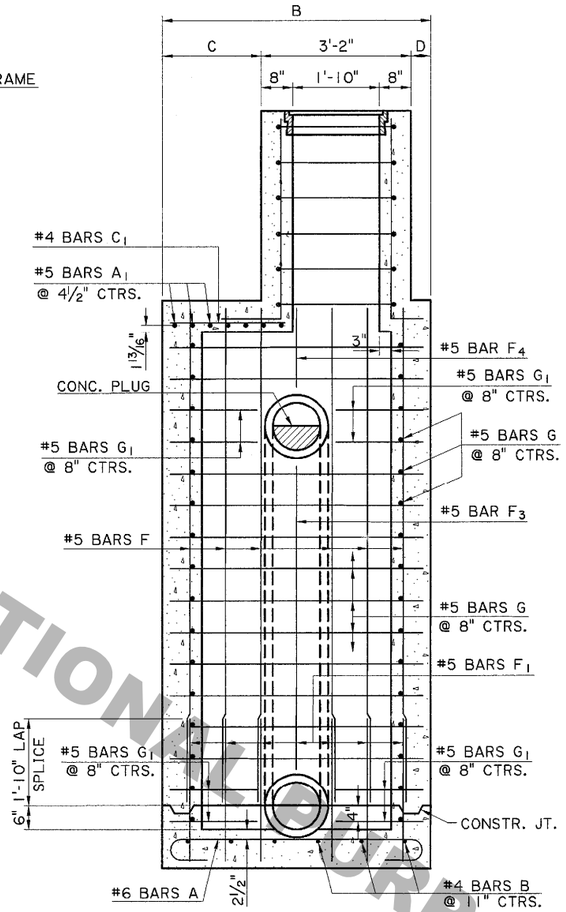

SECTION B-B

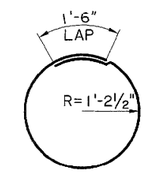

#4 BAR D

GENERAL NOTES:

1) PROJECT SPECIFICATIONS FOR MANHOLES SHALL APPLY.
2) PROJECT SPECIFICATIONS FOR REINFORCEMENT SHALL APPLY FOR FURNISHING AND PLACING REINFORCING STEEL.
3) DIMENSIONS RELATING TO REINFORCING STEEL ARE TO BAR CENTERS.
4) SEE "DETAIL A" FOR DETAILS OF MANHOLE IN A PAVEMENT AREA.

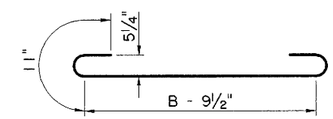

#6 BARS A

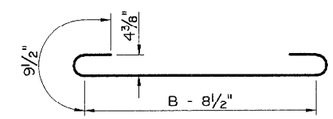

#5 BARS A1

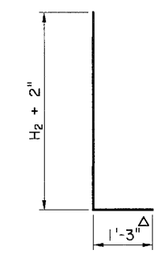

△TO BE CLIPPED FOR CLEARANCE (IF NECESSARY)

#4 BARS E

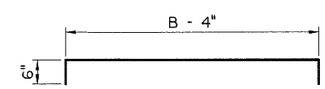

#5 BARS G

#5 BARS G1

DIMENSIONS						
H	T	S	B	A	C	D
8' MAX.	8"	3'-6"	4'-10"	0'-10"	1'-5"	0'-3"
8'-1" - 16'	10"	4'-0"	5'-8"	1'-3"	2'-1"	0'-5"
16'-1" - 24'	12"	4'-0"	6'-0"	1'-5"	2'-3"	0'-7"

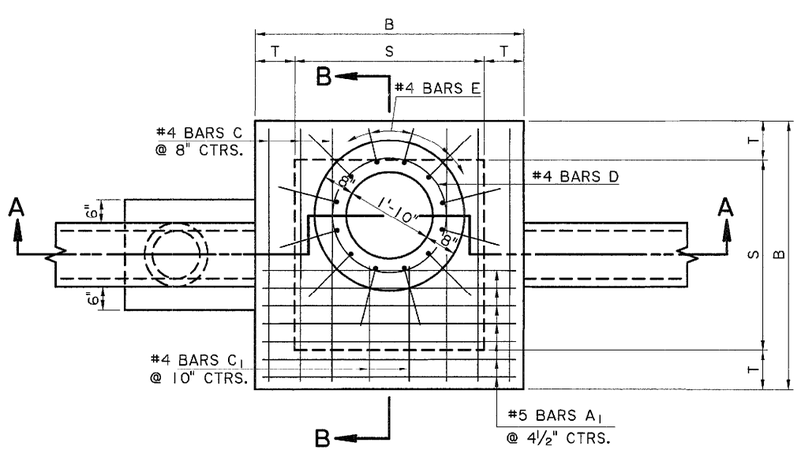

PLAN

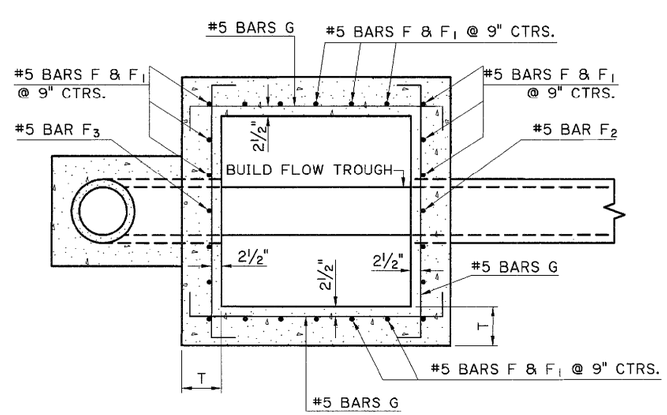

SECTION C-C

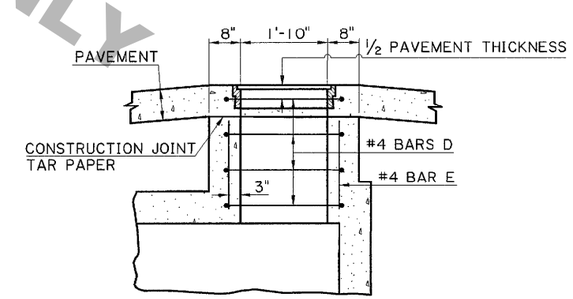

DETAIL A

(MANHOLE IN PAVEMENT AREA)

FOR INFORMATIONAL PURPOSES ONLY

SHEET NUMBER	
PARISH	
FEDERAL PROJECT	
STATE PROJECT	
DESIGNED / CHECKED	
DETAILED / CHECKED	QAH / MARCUM
DATE / SHEET	NOV. 1957 / 1 OF 1

DATE	REVISION DESCRIPTION	BY
10-22-08	REDRAFTED, REMOVED MANHOLE STEPS, NEW SHEET	JDK

APPROVED BY CHIEF ENGINEER: DATE: 10-22-08

R.C. MANHOLE FOR SANITARY SEWER

STANDARD DRAWING R-CB-36

HYDRAULICS SECTION

IP_PWP:dms09543\R-CB-36(2008).dgn