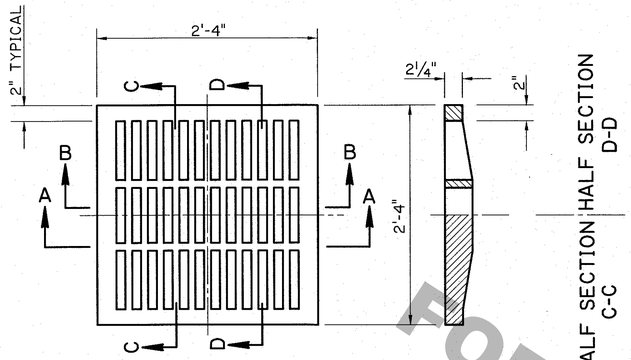

PLAN OF CAST IRON GRATE

HALF SECTION D-D

HALF SECTION C-C

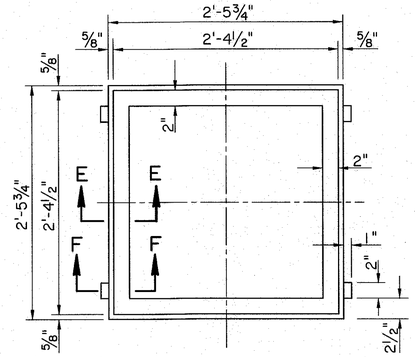

PLAN OF CAST IRON FRAME

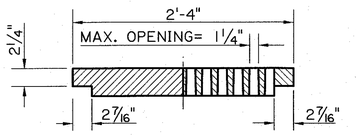

HALF SECTION A-A | HALF SECTION B-B

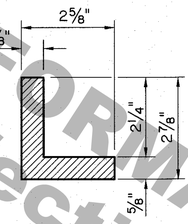

SECTION E-E

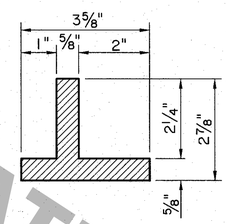

SECTION F-F

TYPE "A"

CAST IRON GRATE & FRAME

MIN. OPENING = 290 SQ. IN. AREA

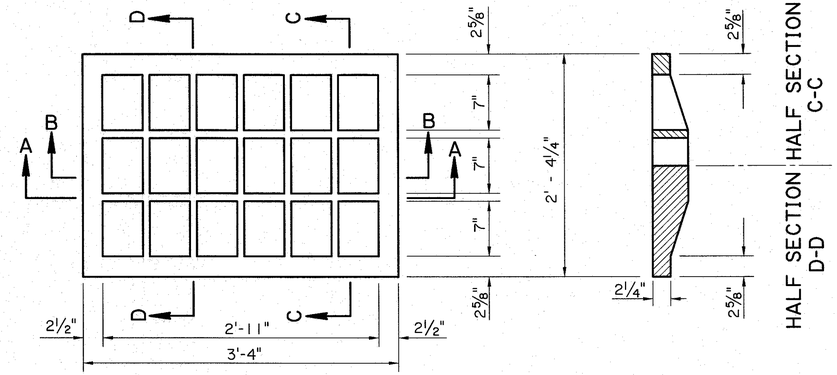

PLAN OF CAST IRON GRATE

HALF SECTION C-C

HALF SECTION D-D

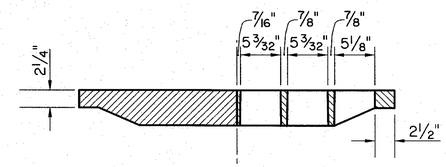

HALF SECTION A-A | HALF SECTION B-B

TYPE "B"

CAST IRON GRATE

NOTE: UNLESS OTHERWISE STATED, TYPE "E" FRAME WILL BE USED WITH THIS GRATE.

TYPE "C"

STEEL DRAIN GRATE

NOTES:
1. GRATES TO BE GALVANIZED AFTER FABRICATION.
2. UNLESS OTHERWISE STATED, TYPE "E_1" FRAME IS TO BE USED WITH THESE GRATES. (SEE SHEET 2)
3. SUPPLIER OF GRATE ALSO IS TO FURNISH PRE-FITTED GRATE FRAME.

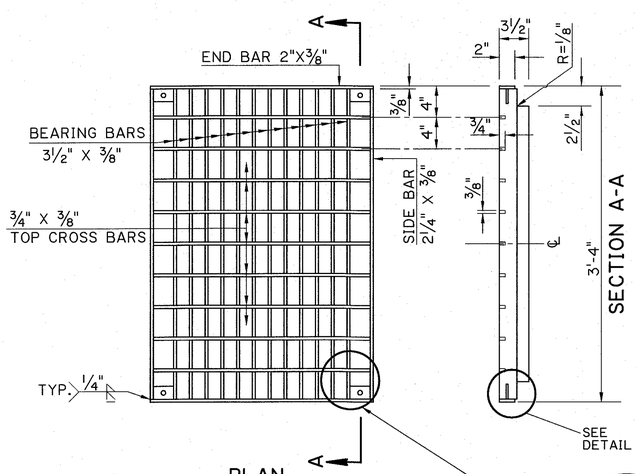

PLAN

SECTION A-A

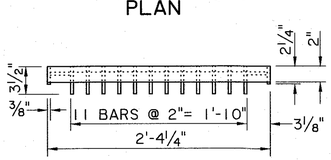

ELEVATION

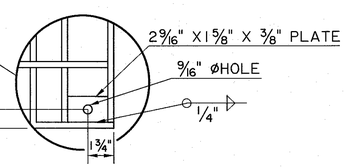

HOLD-DOWN PLATE

WELDED & SEALED DRAIN GRATE

ALL JOINTS FULL DEPTH ¼" FILLET WELDS WITH SEAL WELDS TOP AND BOTTOM UNLESS NOTED OTHERWISE.

ALL BEARING BARS TO BE SET FLUSH ON GRATE FRAME.

WEIGHT OF DRAIN GRATE = 233 LBS. ± 5%

RIVETED RETICULINE DRAIN GRATE (ALTERNATE)

ALL JOINTS FULL DEPTH ¼" FILLET WELDS WITH SEAL WELDS TOP AND BOTTOM UNLESS NOTED OTHERWISE.

ALL BEARING BARS TO BE SET FLUSH ON GRATE FRAME.

CENTER TO CENTER OF BEARING BARS EQUAL 2 5/16" PLUS BEARING BAR THICKNESS.

WEIGHT OF DRAIN GRATE = 266 LBS. ± 5%

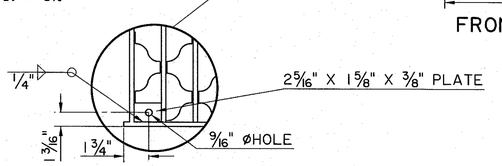

HOLD-DOWN PLATE

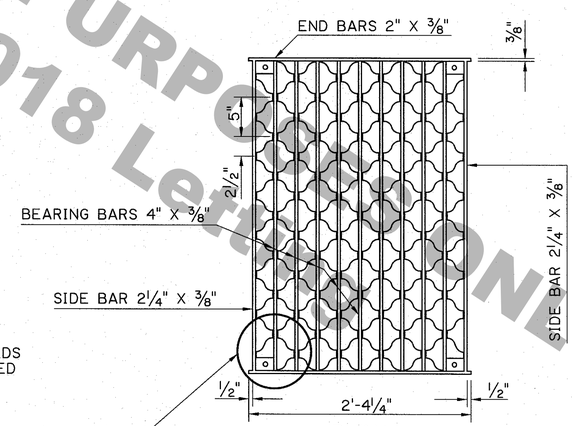

PLAN

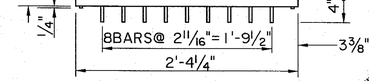

FRONT ELEVATION

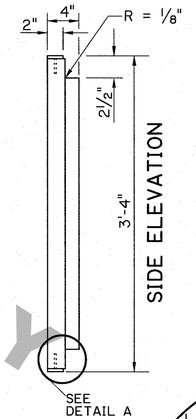

SIDE ELEVATION

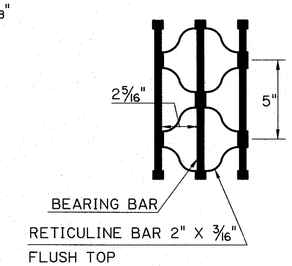

DRAIN GRATE DETAIL (ALTERNATE)

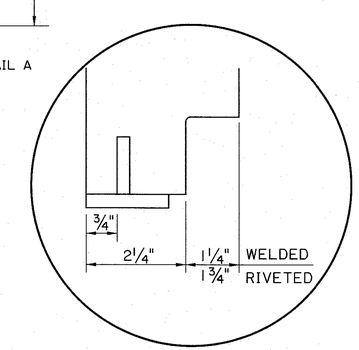

DETAIL A

STATE OF LOUISIANA
ALDEN M. ALLEN
REG. No. 20252
REGISTERED
PROFESSIONAL ENGINEER
IN
CIVIL ENGINEERING
5-25-2018

FOR INFORMATIONAL PURPOSES ONLY
Effective 12/12/2018 Letting

SHEET NUMBER	PARISH	CONTROL SECTION	STATE PROJECT

DESIGNED AMA
CHECKED AMA
DETAILED TL
CHECKED AMA
SERIES NUMBER 9/01/17
1 OF 6

DATE	REVISION DESCRIPTION	BY

APPROVED BY CHIEF ENGINEER:
DATE: 5/25/18

DETAILS OF GRATES, GRATE FRAMES AND COVERS FOR CATCH BASINS AND MANHOLES

STANDARD PLAN MC-01

DOTD HYDRAULICS SECT.